B-LINE SERIES

Electrical enclosures

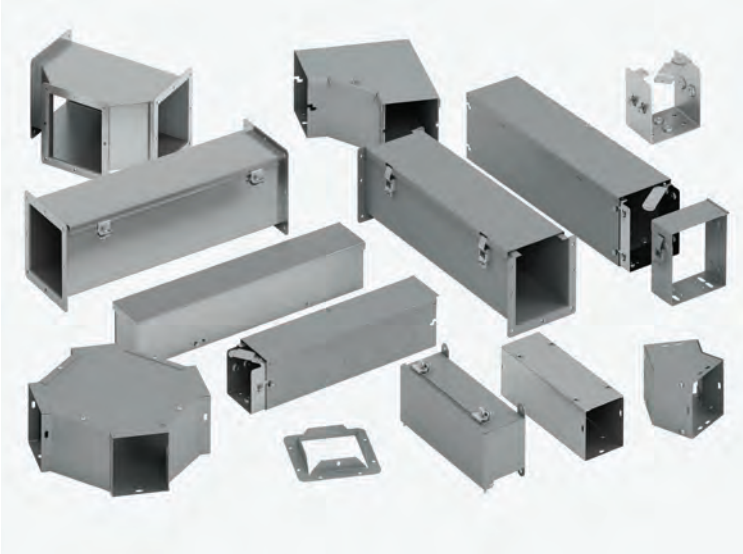

EATON
Powering Business Worldwide

* At Eaton, we believe that power is a fundamental part of just about everything people do. That's why we're dedicated to helping our customers find new ways to manage electrical, hydraulic and mechanical power more efficiently, safely and sustainably. To improve people's lives, the communities where we live and work, and the planet our future generations depend upon. Because this is what really matters. And we're here to make sure it works.

To learn more go to: Eaton.com/whatmatters

EATON
Powering Business Worldwide

We make what matters work.

Quality products

Since 1946, Eaton has offered quality B-Line series enclosures and wireway. Through significant capital investment, our state of the art US manufacturing facility produces to world class standards intended to exceed our customers' expectations.

Enclosures
Manufacturing Facility
Sherman, Texas

- ISO 9001:2008 Certified
- 300,000 Square Foot Facility
- 300+ Employees
- In-House Product Design and Testing Capabilities
- Flexible Manufacturing Systems
- Poured in Place Foam Gaskets
- Aesthetic Finishing Capabilities
- Advanced Powder Paint Systems

Enclosures you want – when you need them

At Eaton, we offer solutions to meet our customer requirements. From standard stock product to modified and custom B-Line series enclosures, our Enclosure Experts are available to help you choose the enclosures you want, in the time you need them.

Enclosure product groups

Wireway

Type 1

Type 3R

Enclosure product groups

Type 12/13

Type 4

Type 4X

Type 4X Fiberglass

Disconnects

Operator Enclosures

Consoles & Consolets

Thermal Products

Modified Enclosures

Accessories

Ease of doing business

With employees dedicated to customer service, we measure our success by exceeding expectations. From ease of quotes and orders to on-time delivery, we aren't satisfied until you are satisfied. We understand that customers rely on the manufacturer to provide support before, during, and after the sale. That's why we have a staff of employees and a tool set dedicated to supporting the needs of our enclosure customers.

- Enclosure Sales Managers
- Enclosure Quotes Specialists
- Engineering Design Specialists
- User-Friendly Catalogs
- Modification Form
- Product Flyers
- Time Studies
- Sizing Calculators
- CAD Files
- EDI & VMI
- Distributor Portal

For more information, visit www.eaton.com/enc

Standard Stocked Enclosures

Eaton strategically stocks standard industrial and commercial B-Line series enclosures to provide the best possible availability to meet customers' expectations.

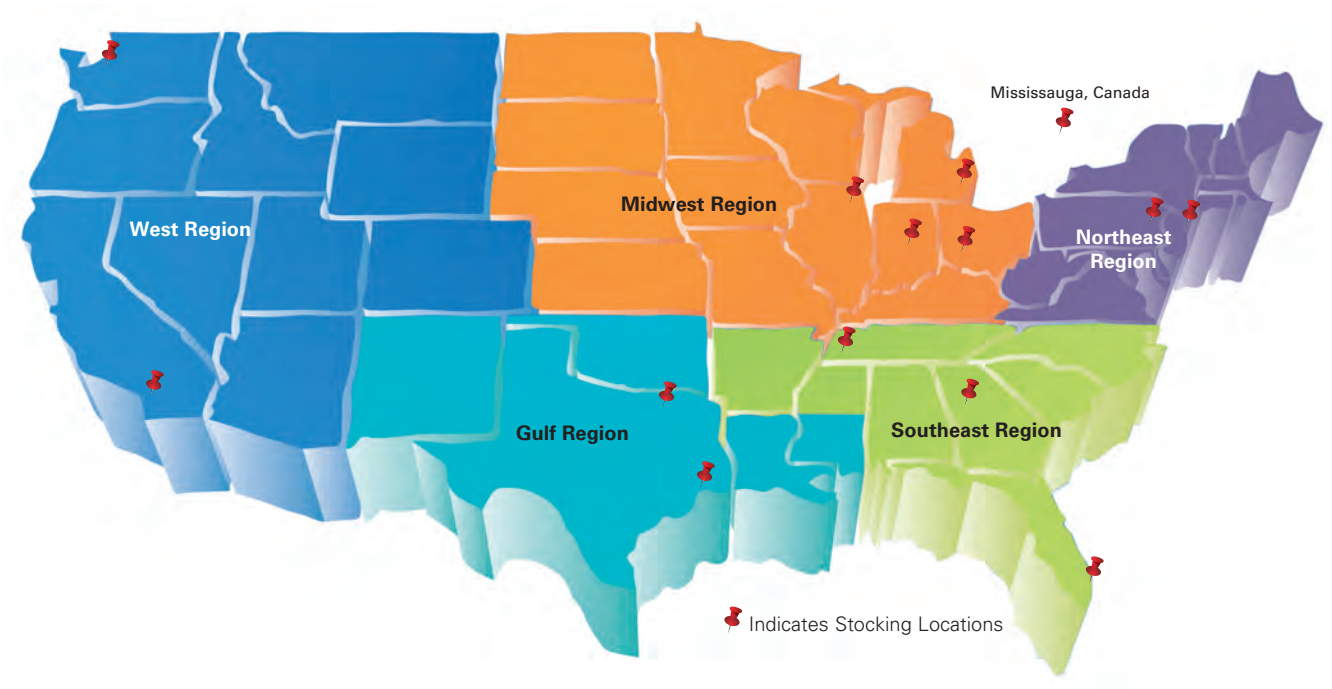

Modified Enclosures

If your business requires enclosures that have push button holes, special paint, modified dimensions and other special requirements for industrial and commercial applications, then you need a manufacturer that can deliver enclosures to meet your specific requirements in time for your project. Eaton offers thousands of B-Line series enclosure designs that can be altered to meet your requirements and delivered in the time you need. For more information, visit www.eaton.com/modified.

- Thousands of Sizes Available
- Various Materials and Finishes
- Standard and Special Paint Options
- Options for Push Button Holes, Cut Outs, Tapped Holes, Louvers and More
- Accessories including Window Kits, PEM Studs, Panels and More

Custom Enclosures

If your business requires more than a stock or modified enclosure, Eaton's enclosure experts partner with customers to engineer unique designs to meet project requirements. We assist customers before, during and after the sale to deliver the enclosures you want, when you need them. For more information, contact our Enclosure Experts at EnclosuresTeam@eaton.com or 800-868-8152.

- Specialized Sales, Quotes and Engineering Resources
- Design Support
- Prototype Support
- In-House Testing Capabilities

Type 12, 4, & 4X Large Ground Mount Enclosure Upgrades
(throughout catalog)

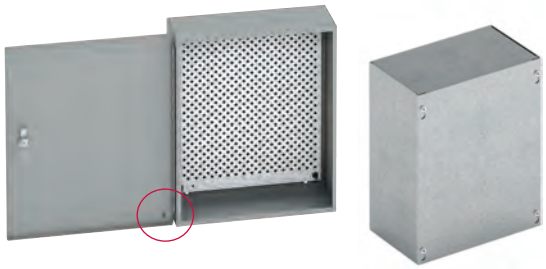

Ground Stud Provision & Hardware Additions
(throughout catalog)

UL Type 4X Listed Pushbutton Enclosures
(pages 342 - 345)

Thermal Additions Air Conditioning & Fans
(pages 375 - 398)

Accessories Additions LED Lights, Door Switches, Handles
(throughout accessories section)

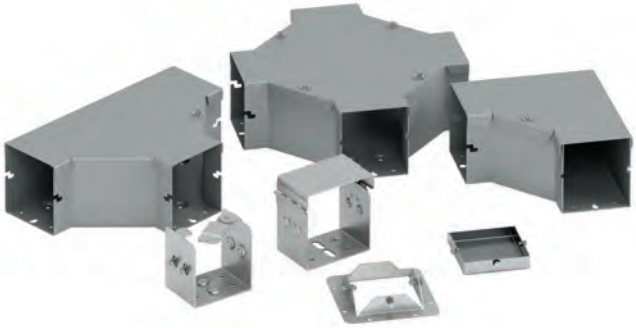

EnviroShield™ Type 3R Wireway
(pages 21 - 24)

Enclosures You Want, When You Need Them

We are excited to announce the improved B-Line series electrical enclosure website that is dedicated to our full line of industrial and commercial B-Line series enclosures. The improved site is easier to navigate and includes the key tools and literature tied to helping you find the enclosures you want; in the time you need them.

And now, you can access all of our industrial and commercial enclosures, as well as wireway products, in CoSPEC℠, our CAD, BIM, PDMS, and Graphics catalog. CoSPEC allows you to select, view and download native design content in nearly 100 different formats.

Log on today to see the latest enclosure information at www.eaton.com/enc

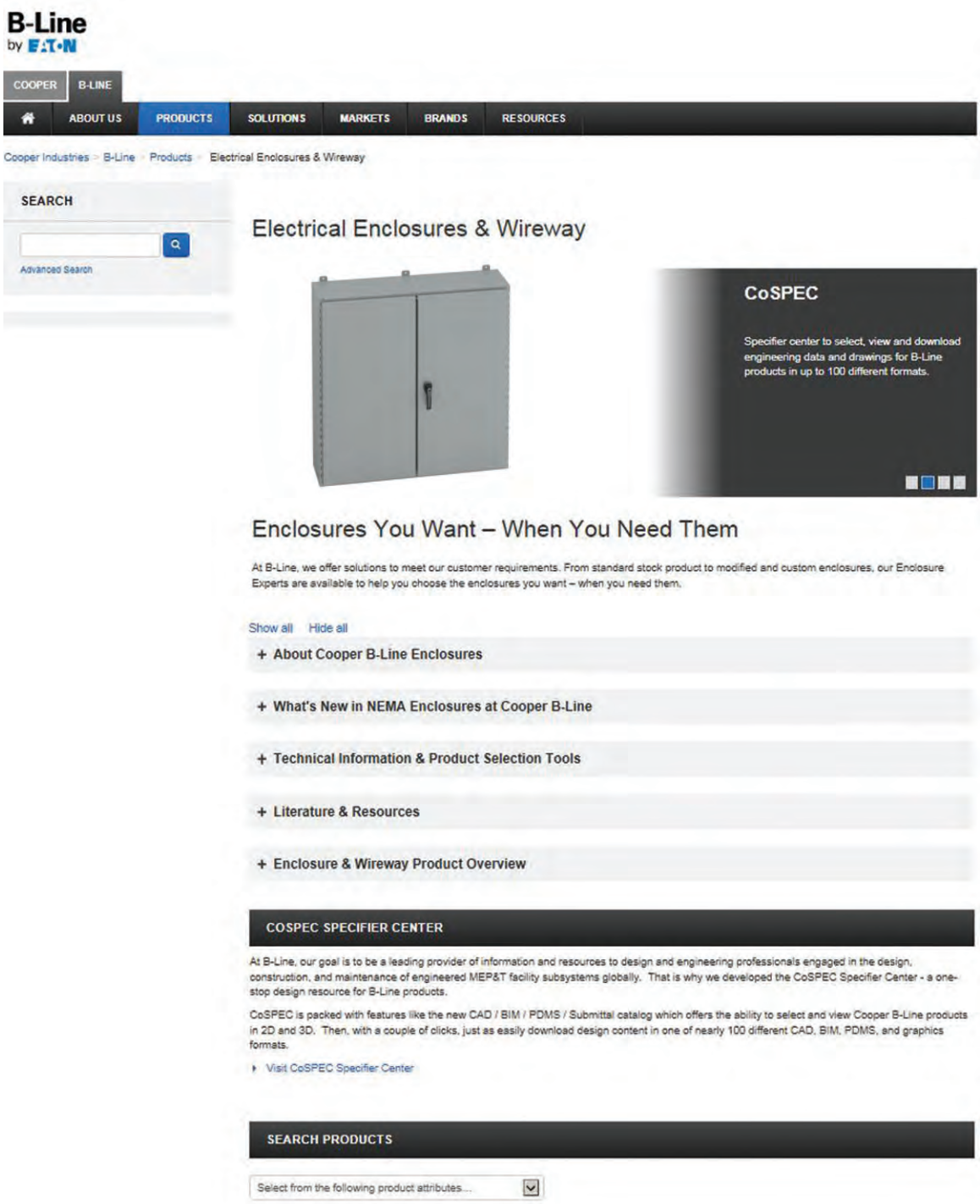

Catalog Numbering Legend

our catalog numbering system for industrial and commercial enclosures and wireway is a logical, easy-to-use system. It was developed so our customers could easily order or find a catalog number. Referenced in each catalog number is the size, type designation, and style. See pages vii, viii, and ix for the full catalog numbering legend.

Industrial Enclosures

643-12CHQRC

size (*H x W x D*) — **type** — **style**

Enclosure Size **Listed left of dash (-)**

Enclosure Type **Immediately follows dash (-)**

1	*Type 1*
4	*Type 4*
4X	*Type 4X*
12	*Type 12*
12F	*Type 12 Fiberglass*
4XA	*Type 4X Aluminum*
4XF	*Type 4X Fiberglass*
4XS	*Type 4X Type 304 SS*
4XSS6	*Type 4X Type 316L SS*

Enclosure Style **Immediately follows Type designation**

3PT	*3-Point Locking*
CD (as a prefix)	*Center Mounted Disconnect Enclosure*
CHC	*Continuous Hinge Cover*
CHQRC	*Continuous Hinge Quick-Release Cover*
CHSC	*Continuous Hinge Screw Cover*
D	*Double-Door*
D3PT	*Double-Door w/ 3-Point Locking*
DA	*Dual-Access*
ES (as a prefix)	*EnviroShield, Free Standing*
FD (as a prefix)	*Flange Mounted Disconnect Enclosure*
FTC	*Flange Trough Collar*
FD	*Floor-Standing, Double-Door*
FD3PT	*Floor-Standing, Double-Door w/ 3-Point Locking*
FDQT	*Floor-Standing, Double-Door w/ Quarter-Turn Latches*
FS	*Free-Standing*
FS3PT	*Free-Standing w/ 3-Point Locking*
FSD	*Free-Standing, Double-Door*
FSD3PT	*Free-Standing, Double-Door w/ 3-Point Locking*
FSDA3PT	*Free-Standing, Dual-Access w/ 3-Point Locking*
FSDDA	*Free-Standing, Double-Door, Dual-Access*
FSDDA3PT	*Free-Standing, Double-Door, Dual-Access w/ 3-Point Locking*
FSDA	*Free-Standing, Dual-Access*
FSQT	*Free-Standing, Double-Door w/ Quarter-Turn Latches*
LC	*Lift-Off Cover*
M (as a prefix)	*Modular*
QT	*Quarter Turn Latches*
SC	*Screw Cover*
TE	*Terminal Enclosure*

Fiberglass Enclosure Style **Immediately follows Type designation**

CHSC	*JIC Hinge Cover w/ Two Screws*
CHQRC	*JIC Hinged Cover w/ Quick Release Pad Lockable Latches*
CHQRCW	*JIC Hinged Cover (Window) w/ Quick-Release Pad Lockable Latches*
D	*Double Door Wallmount*
FS	*Free Standing Single Door*
FSD	*Free Standing Double Door*
LC	*JIC Lift-Off Screw Cover*
PB__	*Multi-Hole Pushbutton Enclosure*
PV__	*Vertical In-Line Pushbutton Enclosure*
RHCF	*Type 3R Panel Enclosure*
SC	*Small Junction Box*
SDF	*Premier Series Hinge Cover w/ Two Screws*
SDFQR	*Premier Series Hinge Cover w/ Quick-Release Pad Lockable Latches*
SDFQRCC	*Premier Series Clear Cover w/ Quick-Release Pad Lockable Latches*

Premier Enclosure Style **Immediately follows Type designation**

DSC	*Single-Door Disconnect*
FM	*Flush-Mount*
SD	*Single-Door*
SDSS4	*Single-Door Type 304 SS*
SDSS6	*Single-Door Type 316L SS*
SDW	*Single-Door w/ Window*
SDWSS4	*Single-Door w/ Window Type 304 SS*
TD	*Double-Door*

Industrial Wireway

2212-12LW

size type style

Wireway Size **Listed left of dash (-)**

Wireway Type **Immediately follows dash (-)**

12	*NEMA 12*
4X	*NEMA 4X*
4XS	*NEMA 4X Type 304 Stainless Steel*

Wireway Styles **Immediately follows Type designation**

FW	*Feed-Through Wireway*
LW	*Lay-In Wireway*
WT	*Wiring Trough*

Lay-In Wireway Fittings

LAHM	*Adapter for Hammond®† Mfg.*
LAHW	*Adapter for Hoffman®† or Wiegmann®†*
LARR	*Adapter for Robroy®† or Rittal®†*
LASD	*Adapter for Square D®†*
BK	*Barrier Kit*
C	*Coupling*
LBC	*Box Connector*
LBH	*Hanger, Bracket*
LC	*Cross, Top Open*
LCF	*Cut-Off Fitting/Lay-in Style*
LCP	*Closure Plate*
LDH	*Hanger, Drop*
LE9A	*90° Elbow, Top Open*
LE9AC	*90° Elbow, Outside-Top Open*
LE9B	*90° Elbow, Inside Open*
LE9C	*90° Elbow, Outside Open*
LE9TC	*90° Transposition Elbow, CW*
LE9TCC	*90° Transposition Elbow, CCW*
LE15A	*15° Elbow, Top Open*
LE45A	*45° Elbow, Top Open*
LE45B	*45° Elbow, Inside Open*
LE45C	*45° Elbow, Outside Open*
LJB	*Junction Box*
LN1	*1″ Nipple*
LN2	*2″ Nipple*
LN3	*3″ Nipple*
LR	*Reducer*
LSP	*Sealing Plate, Flat*
LTA	*Tee, Top Open*
LTF	*Telescopic Fitting*
LTSC	*Transposition, Clockwise*
LTSCC	*Transposition, Counter Clockwise*

† Marks shown are property of respective owners.

Feed-Through Fittings

BH	*Hanger, Bracket*
BK	*Barrier Kit*
DH	*Hanger, Drop*
FBC	*Box Connector*
FC	*Cross*
FCF	*Cut-Off Fitting*
FCP	*Closure Plate*
FE9	*90° Elbow*
FE45	*45° Elbow*
FFF	*Flexible Fitting*
FGK	*Gasket Kit*
FN1	*1″ Nipple*
FN2	*2″ Nipple*
FN3	*3″ Nipple*
FN6	*6″ Nipple*
FRC	*Reducer Center*
FRE	*Reducer Edge*
FT	*Tee*
FTF	*Telescopic Fitting*

Commercial Wireway

4412 G

size style

Wireway Size **Listed First**

Screw Cover Wireway Style **Follows Size designation**

G	*Type 1 Screw Cover Wireway*
GGV	*Type 1 Screw Cover Wireway Galvanized*

Screw Cover Wireway Fittings

C	*Wireway Connector*
E	*Wireway End*
FH	*Wireway Hanger*
FL	*Hinged Elbow*
FR	*Wireway Reducer*
FTF	*Telescopic Fitting*
GF	*Wireway End Flange*
L	*Elbow*
L SWEEP	*Sweep Elbow*
LTX	*Elbow-Tee-Cross*
T	*Wireway Tee*
X	*Wireway Cross*

Commercial Wireway cont.

Hinge Cover Wireway Style **Follows Size designation**

3RHS	*EnviroShield™ Type 3R Wireway, Painted*
3RAHS	*EnviroShield™ Type 3R Wireway, Aluminum*
HS	*Type 1 Quick-Connect Hinge Cover Wireway*

Hinge Cover Wireway Fittings

HSA	*Wireway Connector - Adapter*
HSC	*Wireway Connector*
HSE	*Wireway End*
HSF	*Wireway End Flange*
HSL	*45° Elbow*
HSL	*90° Elbow*
HST	*Wireway Tee*
HSU	*Wireway Connector - Universal*
HSX	*Wireway Cross*

Wire Trough Style **Follows Size designation**

GRT	*Type 3R Screw Cover Wireway, Painted*
GRTGV	*3R Screw Cover Wireway, Galvanized*
GTGV	*Type 1 Wiring Trough, Galvanized*

Commercial Enclosures

884 HC

size — **style**

H x W x D

Enclosure Size **Listed First**

Enclosure Style **Follows Size designation**

DRHC	*Type 3R Double-Door Hinge Cover*
HC	*Type 1 Hinge Cover*
HC NK	*Type 1 Hinge Cover No Knockouts*
HRTCT	*Type 3R Current Transformer Hinge Cover*
P	*Type 1 Locking Enclosure with Perforated Panel*
RHC	*Type 3R Hinge Cover*
RTC	*Type 3R Telephone Termination Cabinet*
RTCT	*Type 3R Current Transformer Screw Cover*
RTHC	*Type 3R Hinge Cover*
RTHC NK	*Type 3R Hinge Cover No Knockouts*
RTSC	*Type 3R Screw Cover*
RTSCGV	*Type 3R Screw Cover Galvanized*
RTSCGV NK	*Type 3R Screw Cover Galvanized No Knockouts*
RTSC NK	*Type 3R Screw Cover No Knockouts*
SC	*Type 1 Screw Cover*
SCG	*Type 3 Gasketed Screw Cover*
SCGV	*Type 1 Screw Cover Galvanized*
SCGV NK	*Type 1 Screw Cover Galvanized No Knockouts*
SC NK	*Type 1 Screw Cover No Knockouts*
TCF	*Type 1 Telephone Termination Cabinet/Flush Mount*
TCS	*Type 1 Telephone Termination Cabinet/Surface Mount*
WPSC	*Type 3 Screw Cover*

Accessories

AHP	*Adjustable Hinge Panel Kit*
AMK	*Adjustable Mounting Kit*
APK	*Adjustable Panel Kit*
AP	*Aluminum Panel*
BAP	*Blank Adapter Plate*
BK	*Barrier Kit*
BP	*Baffle Plate*
DF	*Dead Front Panel*
DK	*Drop Shield Kit*
DSTOPK	*Door Stop Kit*
EH	*External Hinge*
ES	*Enclosure Stabilizer*
FAS	*Filter Adhesive Spray*
FLT	*Filters*
FLWK	*Frameless Window Kit*
FSHELF	*Folding Shelf Kit*
GP	*Galvanized Panel*
GP	*Gland Plates*
HWK	*Hinged Window Kits*
IC	*Inspection Cover*
JICSPK	*JIC Swing Panel Kit*
KL	*Keyed Lock*
LPK	*Louver Plate Kits*
MC	*Mounting Channels*
MMF	*Modular Mounting Frame*
NSPK	*NEMA Swing Panel Kit*
P	*Panel*
PF	*Fiberglass Panel*
PCK	*Panel Conversion Kit*
PLH	*Panel Lifting Hooks*
PMK	*Pole Mounting Kits*
PS	*Panel Support Kit*
PP	*Perforated Panel*
PWK	*Plexiglass Window Kit*
QRCS	*Quick-Release Cover Screw*
RMA	*Rack Mounting Angles*
SCS	*Slotted Cover Screw*
SF	*Swing-Out Rack Frames*
SL	*Standard Latch*
SP	*Sealing Plate*
SP	*Stainless Panel*
SP	*Swing-Out Panel*
TB	*Terminal Block*
TS	*Terminal Strap*
TSK	*Terminal Strap Support Kit*
WB	*Wood Back Board*
WMHK	*Wall-Mount Handle, Key Locking*
WMHNL	*Wall-Mount Handle, Non-Locking*
WMHPTO	*Wall-Mount Handle, Padlockable*
WMK	*Wall Mounting Kit*

NEMA
Setting Standards for Excellence

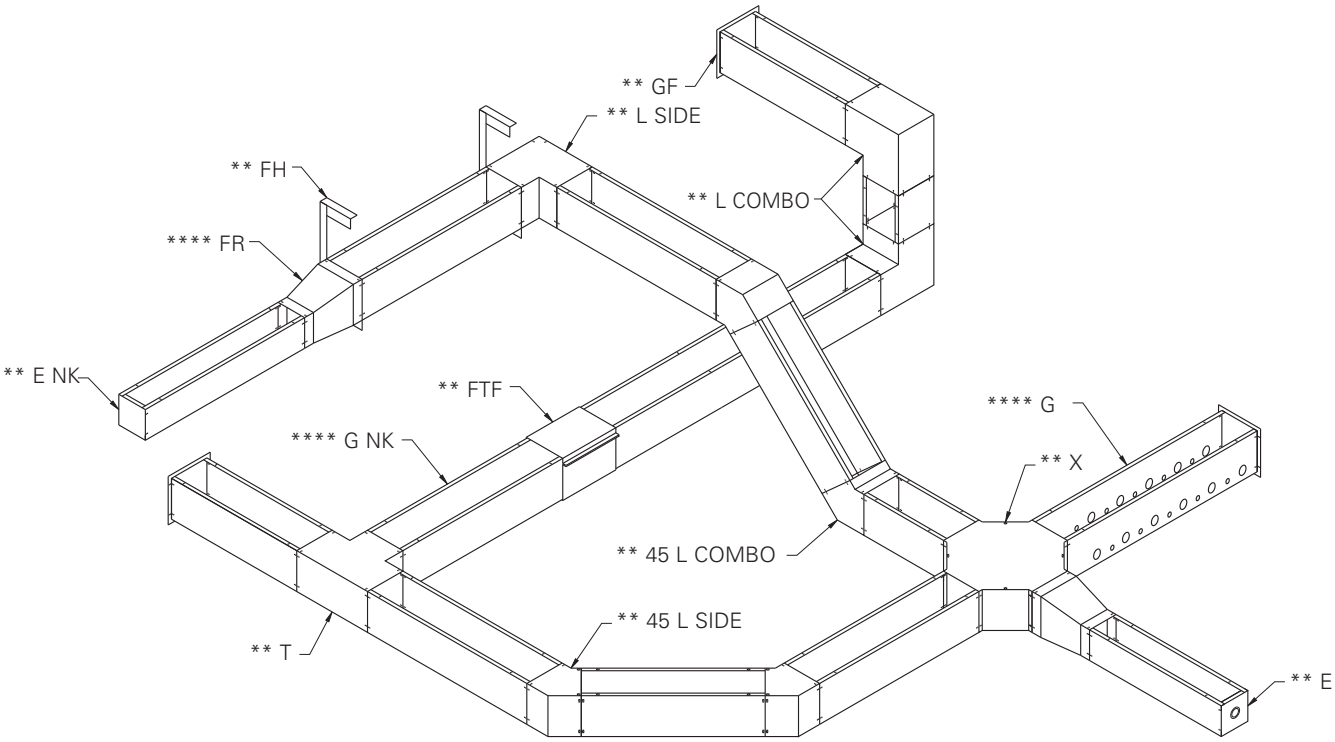

This drawing is for illustration purposes only. It depicts how most B-Line series Type 1 screw cover wireway straight sections and fittings could be used in an actual wireway run. Covers have been omitted in many instances to more clearly show the lay-in feature. Straight sections and fittings can be combined in many different configurations to accommodate any wiring application. The nomenclature depicts Type 1 screw cover wireway in ANSI 61 gray painted steel. In addition, we also offer Type 1 galvanized screw cover wireway, Type 1 Quick-Connect hinge cover wireway, Type 3R wireway, NEMA 12 and NEMA 4/4X feed-through wireway, and NEMA 12 lay-in wireway.

NOMENCLATURE

***** FR*	*Reducer*	*** GF*	*End flange*
***** G*	*Straight section with knockouts*	*** L COMBO*	*90° Elbow combo opening*
***** G NK*	*Straight section without knockouts*	*** L SIDE*	*90° Elbow side opening*
*** E*	*End with knockouts*	*** 45 L COMBO*	*45° Elbow combo opening*
*** ENK*	*End without knockouts*	*** 45 L SIDE*	*45° Elbow side opening*
*** FH*	*Hanger*	*** T*	*Tee*
*** FTF*	*Telescopic fitting*	*** X*	*Cross*

***** Specify height x depth x length*

*** Specify height x depth*

Type 4 Panel Enclosures

I

A

Wall-Mount Enclosures
Type 4 Double-Door with 3-Point Locking
Data Sheet and Catalog Number

Accessories
- Panels
- Window Kits
- Floor stand kit
- Lights
- Replacement handle, T4PKHB, (see page 426)

E

B

Application
- Houses electrical controls and instruments
- Intended for indoor or outdoor use
- Protects against windblown dust and rain, splashing water and hose directed water

J

Type 4 Panel Enclosures

C

Standards
- UL 508 listed, Type 4, 12
- CSA C22.2 No.94 certified, Type 4, 12
- Conforms to NEMA standard for Type 3, 4, 12

Finish
- Wash and phosphate undercoat
- ANSI 61 gray polyester powder finish

D

Construction
- Enclosure and door are fabricated from (14) gauge steel
- All continuous welded seams are finished smooth
- Heavy-duty continuous hinges with stainless steel hinge pins
- Internal 3-point latching with keylocking and padlock handles
- Removable centerpost for easy panel installation
- Doors have a seamless poured in-place gasket
- Formed lip around enclosure opening diverts liquids and contaminants
- Ground stud provided on door and body
- Print pocket provided
- .375-16 colar studs are provided for mounting optional panel
- External mounting feet

F

Discount Schedule: C2

Subclass: DI0

G

Enclosure Catalog Number	Enclosure Size Height x Width x Depth A x B x C in.	mm	Panel Catalog Number	Conductive Panel Catalog Number	Panel Size Height x Width in.	mm
244210-4D3PT	24.00 x 42.00 x 10.00	609 x 1067 x 254	AW4224P	--	38.87 x 20.87	987 x 530
304210-4D3PT	30.00 x 42.00 x 10.00	762 x 1067 x 254	AW4230P	AW4230GP	38.87 x 26.87	987 x 682
304810-4D3PT	30.00 x 48.00 x 10.00	762 x 1219 x 254	AW4830P	AW4830GP	44.87 x 26.87	1139 x 682
306010-4D3PT	30.00 x 60.00 x 10.00	762 x 1524 x 254	AW6030P	--	56.87 x 26.87	1444 x 682
364812-4D3PT	36.00 x 48.00 x 12.00	914 x 1219 x 305	AW4836P	AW4836GP	44.87 x 32.87	1139 x 835
366012-4D3PT	36.00 x 60.00 x 12.00	762 x 1524 x 305	AW6036P	AW6036GP	56.87 x 32.87	1444 x 835

H

Notes: We can provide special sizes, finishes and other modifications. Consult the factory for your special requirements.

Eaton 164 K B-Line series electrical enclosures

A - Product Group & Type
B - Application Information
C - Applicable Standards
D - Finish Information
E - Optional Accessories
F - Construction Specification Bullets
G - Discount Schedule & Subclass
H - Catalog Number & Product Data
I - Catalog Section
J - Tab - Color & Catalog Section
K - Page Number

Table of Contents

WIREWAY

Wireway

Lay-In Wireway Type 1 Screw Cover 8-14
Lay-In Wireway Type 1 Quick-Connect Hinge Cover 15-20
Lay-In Wireway Type 3R EnviroShield™ System 21-24
Lay-In Wireway Type 12 25-31
Feed-Through Wireway Type 12 32-35
Feed-Through Wireway Type 4X 36-39

Wire Trough

Wiring Trough Type 1 Screw Cover 40-41
Wiring Trough Type 3R Screw Cover 42-43
Wiring Trough Type 12 Lift-Off Cover 44-45
Wiring Trough Type 4X Lift-Off Cover 46-47

Type 1

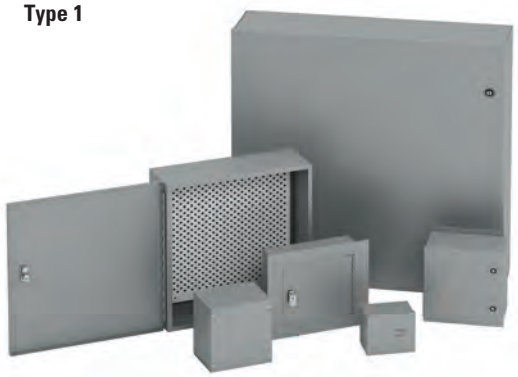

Type 3/3R

TYPE 1, 3, & 3R ENCLOSURES

Junction Boxes

Junction Boxes Type 1 Screw Cover 50-53
Junction Boxes Type 1 Hinge Cover 54-55
Junction Boxes Type 3R Screw Cover 56-57
Junction Boxes Type 3R Hinge Cover 58-59
Junction Boxes Type 3 Screw Cover Gasketed 60-61
Junction Boxes Type 3 Weatherproof Screw Cover . 62-63

Panel Enclosures

Panel Enclosures Type 1 Small 64-65
Panel Enclosures Type 1 Medium 66-67
Panel Enclosures Type 1 Large 68-69
Panel Enclosures Type 1 Locking Hinge Cover w/Perforated Panel 70-71
Panel Enclosures Type 3R Small Continuous Hinge Cover 72-73
Panel Enclosures Type 3R Large Continuous Hinge Cover 74-75
Panel Enclosures Type 3R Double-Door 76-77

Utility Enclosures

Utility Cabinets Type 1 Telephone Cabinets 78-80
Utility Cabinets Type 3R Telephone Cabinets 81-82
Utility Cabinets Type 3R Screw Cover Current Transformer Cabinets 83-85
Utility Cabinets Type 3R Hinge Cover Current Transformer Cabinets 86-87

Table of Contents

TYPE 12/13 ENCLOSURES

JIC Enclosures

Type 12 Lift-Off Cover 90-91
Type 12 Continuous Hinge Cover 92-93
Type 12 Screw Cover 94-95
Type 12 Continuous Hinge Screw Cover 96-97
Type 12 Continuous Hinge Quick-Release Cover 98-99
Type 12 Large Continuous Hinge Screw Cover 100-101
Type 12 Continuous Hinge Flanged Trough Cover 102-103

Wall-Mount Enclosures

Type 12 Single-Door 104-107
Type 12 Terminal 108-109
Type 12 Double-Door 3-Point Locking 110-111

Ground-Mount Enclosures

Type 12 Double-Door Floor-standing 3-Pt Locking 112-113
Type 12 Double-Door Free-Standing 3-Point Locking 117-116
Free-Standing Enclosure Accessories 117-125
Type 12 Modular Free-Standing 3-Point Locking .. 126-129
Type 12 Multi-Door Free-Standing 3-Point Locking 130-133

TYPE 4 ENCLOSURES

JIC Enc.

Type 4 Lift-Off Cover 136-137
Type 4 Continuous Hinge Cover 138-139
Type 4 Continuous Hinge Cover Quarter-Turn Latches 140-141

Wall-Mount Enclosures

Type 4 Single-Door 142-144
Type 4 Premier™ Series Quarter-Turn Latches 145-149
Type 4 Premier™ Series Flush-Mount Quarter-Turn Latches 150-151
Type 12 Premier™ Series Double-Door Quarter-Turn Latches 152-153
Premier™ Series Accessories 154-159
Type 4 Single-Door 3-Point Locking 160-161
Type 4 Double-Door 3-Point Locking 162-163

Ground-Mount Enclosures

Type 4 Double-Door Floor-Standing..... 164-165
Type 4 Double-Door Floor-Standing Quarter-Turn Latches 166-167
Type 4 Double-Door Floor-Standing 3-Point Locking 168-169
Type 4 Single-Door Free-Standing 170-171
Type 4 Single-Door Free-Standing Quarter-Turn Latches 172-173

continued on page 3

TYPE 4 ENCLOSURES continued from page 2

Ground-Mount Enclosures

Type 4 Single-Door Free-Standing 3-Point Locking 174-175
Type 4 Single-Door Dual-Access Free-Standing 3-Point Locking 176-177
Type 4 EnviroShield™ Free-Standing 3-Point Locking 178-179
Free Standing Enclosure Accessories 180-191

TYPE 4X ENCLOSURES

JIC Enclosures

Type 4X Lift-Off Cover 192-193
Type 4X Lift-Off Cover, Aluminum 194-195
Type 4X Continuous Hinge Cover 196-197
Type 4X Continuous Hinge Cover, Aluminum 198-199
Type 4X Continuous Hinge Cover Quarter-Turn Latches 200-201

Wall-Mount Enclosures

Type 4X Single-Door 202-203
Type 4X Single-Door, Aluminum 204-205
Type 4X Premier™ Quarter Turn Latches 206-209
Premier™ Series Accessories.....210-215
Type 4X Single-Door 3-Point Locking 216-217
Type 4X Double-Door 3-Point Locking 218-219

Ground-Mount Enclosures

Type 4X Double-Door Floor-Standing 220-221
Type 4X Double-Door Floor Standing, Aluminum .. 222-223
Type 4X Double-Door Floor-Standing Quarter-Turn Latches 224-225
Type 4X Double-Door Floor-Standing 3-Point Locking 226-227
Type 4X Single-Door Free-Standing 228-229
Type 4X Single-Door Free-Standing Quarter-Turn Latches 230-231
Type 4X Single-Door Free-Standing 3-Point Locking 232-233
Type 4X Single-Door Dual Access Free-Standing 3-Point Locking 234-235
Type 4X Double-Door Free-Standing 3-Point Locking 236-237
Type 4X Double-Door Dual Access Free-Standing 3-Point Locking 238-239
Type 4X Double-Door EnviroShield™ Free-Standing 3-Point Locking 240-241
Free-Standing Accessories 242-254

Table of Contents

TYPE 4X FIBERGLASS ENCLOSURES

JIC Enclosures

Type 4X Lift-Off Screw Cover 256-257
Type 4X Hinged Screw Cover 258-259
Type 4X Hinged Quick-Release Cover 260-261
Type 4X Hinged Quick-Release Window Cover 262-263
Type 4X Premier™ Series Hinged Screw Cover 264-265
Type 4X Premier™ Series Hinged Quick-Release Cover 266-267
Type 4X Premier™ Series Hinged Quick-Release Clear Cover 268-269
Type 4X Small Junction 270-273

Wall-Mount Enclosures

Type 3R Continuous Hinge Cover 274-275
Type 4X Single-Door 276-277
Type 4X Double-Door 278-279

Ground Mount

Type 4X Free-Standing Single-Door 280-281
Type 4X Free-Standing Double-Door 282-283

Pushbutton Enc.

Type 4X In-Line 30mm Pushbutton 284-285
Type 4X In-Line 22mm Pushbutton 286-287
Type 4X Multi-Hole 30mm Pushbutton 288-289
Fiberglass Back Panels 290-291
Fiberglass Accessories 292-294

DISCONNECT ENCLOSURES

Wall-Mount Enc.

Type 12 Flange-Mount 296-298
Type 4 & 4X Premier™ Series 2-Point & 3-Point Locking 299-300
Wall-Mount Disconnect Mechanisms 301-306

Ground-Mount Enclosures

Type 12 Center & Flange-Mount Floor-Standing 3-Point Locking 307-311
Floor-Standing Disconnect Mechanisms 312-319
Type 12 Heavy-Duty Single & Multi Door Flange-Mount Free Standing 320-326
Type 12 Modular Free-Standing 327-331
Free-Standing Disconnect Mechanisms 332-339

OPERATOR ENCLOSURES

Pushbutton Enclosures

Type 12 & Type 4X - 22.5mm & 30.5mm 342-343
Type 12 & Type 4X Extra-Deep - 30.5mm 344-345
Type 12 Miniature - 22.5 mm 346-347
Type 12 Hinge Cover - 30.5 mm with Panel 348-349
Type 12 Angle Front - 30.5mm) 350-351

Console/Consolets

Consolet Type 12 353-355
Console Type 12 - AW-9 356-357
Console Type 12 - AW-12 358-360
Console Type 12 - AW-14 361-365
Console Accessories Type 12 - AW-14 366-367
Console Accessories 368-369

CLIMATE CONTROL PRODUCTS

Air Conditioners

A/C NEMA 4 or 4X 375-379
~~A/C 480 Volt 1-Phase NEMA 4 or 4X~~ Discontinued..... ~~380~~
~~A/C 480 Volt 3-Phase NEMA 4 or 4X~~ Discontinued ~~381-382~~
A/C NEMA 4 or 4X Slimcool Series 383-385
A/C Top Mounted NEMA 12 Compact Series Horizontal 386
A/C Top Mounted NEMA 12 Compact Plus Series Horizontal 387

Filter Fans

Filter Fans NEMA 1 388
Filter Fans NEMA 3R Advantage Sentry Series 389
Filter Fans Filter-Grille Assemblies Advantage Sentry Series 390
Filter Fans NEMA 4 or 4X Guardian Series 391-392
Filter Fans Filter-Hood Assemblies Guardian Series 393
Filter Fans NEMA 12 Filter Fan, Grills, Replacement Filters 394-398

Heaters

PTC Fan Heaters 400
PTC Heaters 401
Fan Heaters 402

Thermstats

Small Thermostats 403
Electronic Humidity and Temperature Controls 403

Table of Contents

ACCESSORIES

Panels
JIC & Small Panels, RHC Panels, Type 1 Medium Panels, NEMA Panels, JIC Perforated Panels, Medium Perforated Panels, Flanged Panels, Wood Back Panels, ... 406-413

Panel Accessories
JIC & NEMA Swing Panel Kits, Panel Supports, Lifting Hooks 414-416

Window Kits - Fixed & Hinged 417-418

Door Accessories - Door Stops & Print Pockets 418

Locks, Latches, Inserts, Handles, Clamps
Locks, Latches, Inserts, & Handles 419-428
Padlock Kit, Clamp Kits 429-431

Bolt-On Accessories
Folding Shelf Kit & Gland Plates
Floor Stand Kit & Stabilizer 432-433
Louver Plate Kits, Filters, & Filter Adhesive 434-435
Baffle Plates & Hole Seals, Drip Shields & Casters, Barriers, Component Mounting Device 436-439

Electrical Accessories
JIC & NEMA Terminal Strap & Block Strip Kits 440-442
Terminal Blocks - Channel Mounted & Flat Base, Terminal Strap Support 443-445
Enclosure Lights & Interlocks 445-445
Power Strips & Receptacles 447-449

Columns & Bases 450-451

Disconnect Adapter Kits & Blank Adapter Plates 452

Hardware & Miscellaneous
Hardware Packages, Ground Lug & Devices, Sealing Devices, Clamping Nuts, Touch-Up Paint 453-455

ENGINEERING DATA

Standards, Enclosure Comparison Charts, Materials & Finishes, Corrosion Charts, Wireway Selection Charts, Decimal & Metric Conservion Charts 458-472

1084-12LC 91
1084-12SC 95
1084-4CHC 141

INDEX

Part Number Index 474-508

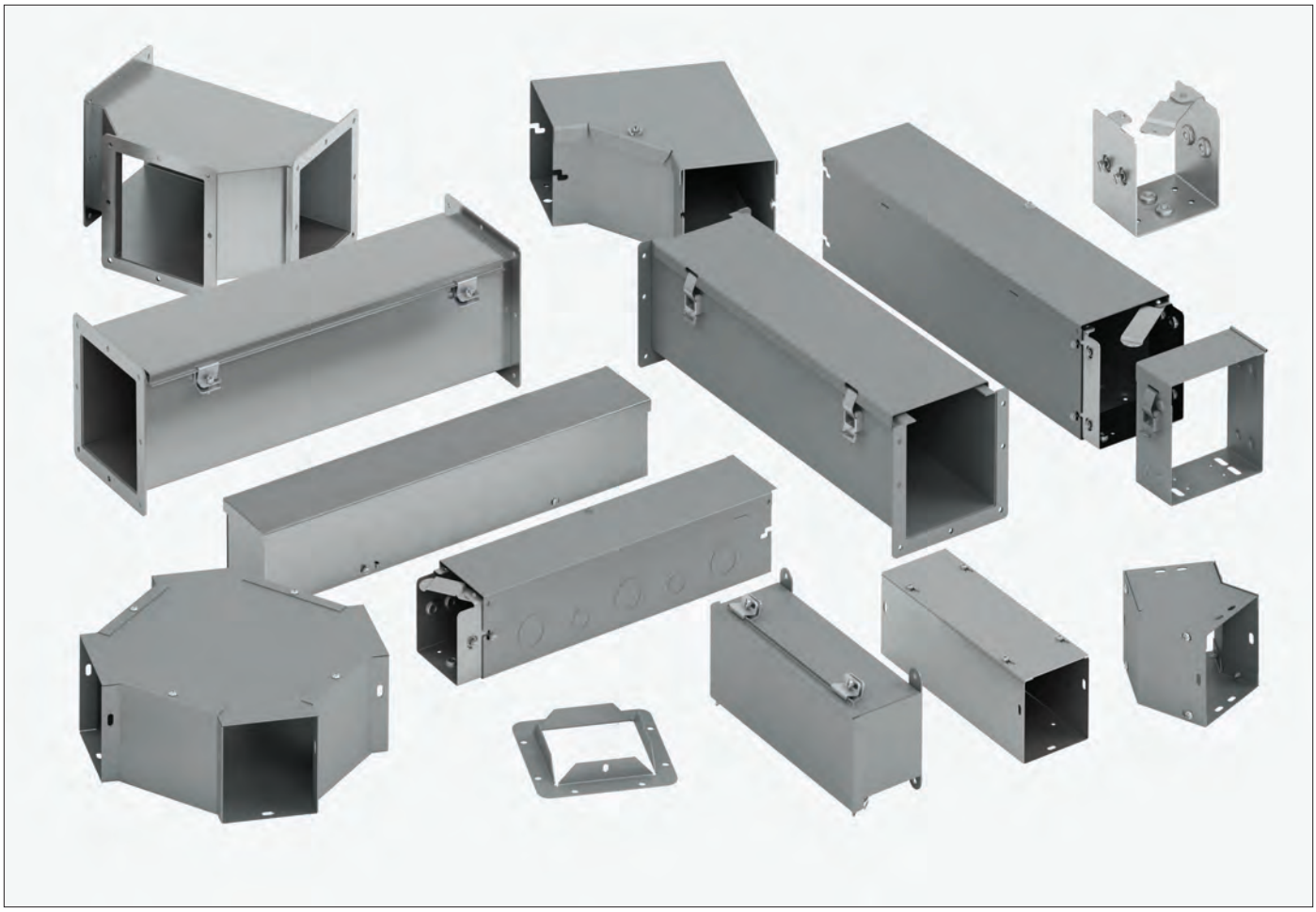

Lay-In Wireway Type 1 Screw Cover 8-14
Lay-In Wireway Type 1 Quick-Connect Hinge Cover 15-20
Lay-In Wireway Type 3R EnviroShield™ 21-24
Lay-In Wireway Type 12 25-31
Feed-Through Wireway Type 12 32-35
Feed-Through Wireway Type 4X 36-39
Wiring Trough Type 1 Screw Cover 40-41
Wiring Trough Type 3R Screw Cover 42-43
Wiring Trough Type 12 Lift-Off Cover 44-45
Wiring Trough Type 4X Lift-Off Cover 46-47

Lay-In Wireway
Type 1 Screw Cover - Painted & Galvanized
Data Sheet

Application
- Houses runs of control and power cable
- Used for cable and wire junction, distribution and termination

Standards
- UL 870 listed, Type 1
- CSA C22.2 No. 26 certified, Type 1
- Conforms to NEMA standard for Type 1

Finish
- Wash and phosphate undercoat or galvanized steel
- ANSI 61 gray acrylic electrocoat finish

Accessories
- Sealing devices
- Touch-up paint
- See Accessories section

Construction
- Wireway body and cover are fabricated from code gauge steel or galvanized steel, (see table, pages 9 & 10)
- Wireway body has mounting holes on the back
- Wireway is available with or without knockouts
- Wireway fittings have no knockouts, ends are available with or without knockouts
- Cover is secured to the body with plated screws
- Keyhole slots are furnished on the wireway cover which allow easy access to the inside without removing the screws
- Wireway exceeding 72 inches in length has two overlapping covers
- Variety of fittings allow runs which can change direction, junction and terminate
- Standard wireway connectors (sold separately) have a gate feature which can swing completely open allowing for lay-in of wire and cable
- Interchangeable with Type 1 Hinge Cover Wireway and Fittings when HSCA connector is used, (see page 17)

Discount Schedule: A2

Subclass: AK1 (painted) & Z40 (galvanized)

Notes: We can provide special sizes, finishes and other modifications. Consult the factory for your special requirements.

Lay-In Wireway
Type 1 Screw Cover - Painted & Galvanized

Catalog Number **Subclass: Painted - AK1 & Galvanized - Z40**

Wireway Catalog Number				Wireway Size					Knockout Quantity	
Painted		Galvanized		Height x Depth x Length A x B x C		D				
KO	No KO	KO	No KO	in.	mm	in.	mm	Gauge	Top	Bottom
2212 G	2212 G NK	—	2212 GGV NK	2.50 x 2.50 x 12.00	64 x 64 x 305	1.25	32	16	3	3
2224 G	2224 G NK	2224 GGV	2224 GGV NK	2.50 x 2.50 x 24.00	64 x 64 x 610	1.25	32	16	7	7
2236 G	2236 G NK	2236 GGV	2236 GGV NK	2.50 x 2.50 x 36.00	64 x 64 x 914	1.25	32	16	11	11
2248 G	2248 G NK	—	2248 GGV NK	2.50 x 2.50 x 48.00	64 x 64 x 1219	1.25	32	16	15	15
2260 G	2260 G NK	2260 GGV	2260 GGV NK	2.50 x 2.50 x 60.00	64 x 64 x 1524	1.25	32	16	23	23
22120 G	22120 G NK	22120 GGV	22120 GGV NK	2.50 x 2.50 x 120.00	64 x 64 x 3048	1.25	32	16	39	39
—	3312 G NK	—	—	3.00 x 3.00 x 12.00	76 x 76 x 305	1.50	38	16	3	3
—	3324 G NK	—	—	3.00 x 3.00 x 24.00	76 x 76 x 610	1.50	38	16	7	7
—	3336 G NK	—	—	3.00 x 3.00 x 36.00	76 x 76 x 914	1.50	38	16	11	11
—	3348 G NK	—	—	3.00 x 3.00 x 48.00	76 x 76 x 1219	1.50	38	16	15	15
—	3360 G NK	—	—	3.00 x 3.00 x 60.00	76 x 76 x 1524	1.50	38	16	19	19
—	3372 G NK	—	—	3.00 x 3.00 x 72.00	76 x 76 x 1829	1.50	38	16	23	23
—	33120 G NK	—	—	3.00 x 3.00 x 120.00	76 x 76 x 3048	1.50	38	16	39	39
4412 G	4412 G NK	4412 GGV	4412 GGV NK	4.00 x 4.00 x 12.00	102 x 102 x 305	2.75	70	16	3	3
4418 G	4418 G NK	—	4418 GGV NK	4.00 x 4.00 x 18.00	102 x 102 x 457	2.75	70	16	5	5
4424 G	4424 G NK	4424 GGV	4424 GGV NK	4.00 x 4.00 x 24.00	102 x 102 x 610	2.75	70	16	7	7
4436 G	4436 G NK	4436 GGV	4436 GGV NK	4.00 x 4.00 x 36.00	102 x 102 x 914	2.75	70	16	11	11
4448 G	4448 G NK	4448 GGV	4448 GGV NK	4.00 x 4.00 x 48.00	102 x 102 x 1219	2.75	70	16	15	15
4460 G	4460 G NK	4460 GGV	4460 GGV NK	4.00 x 4.00 x 60.00	102 x 102 x 1524	2.75	70	16	19	19
4472 G	4472 G NK	4472 GGV	4472 GGV NK	4.00 x 4.00 x 72.00	102 x 102 x 1829	2.75	70	16	23	23
44120 G	44120 G NK	44120 GGV	44120 GGV NK	4.00 x 4.00 x 120.00	102 x 102 x 3048	2.75	70	16	39	39
—	6412 G NK	—	—	6.00 x 4.00 x 12.00	152 x 102 x 305	4.25	108	16	3	3
—	6418 G NK	—	—	6.00 x 4.00 x 18.00	152 x 102 x 457	4.25	108	16	5	5
—	6424 G NK	—	—	6.00 x 4.00 x 24.00	152 x 102 x 610	4.25	108	16	7	7
—	6436 G NK	—	—	6.00 x 4.00 x 36.00	152 x 102 x 914	4.25	108	16	11	11
—	6448 G NK	—	—	6.00 x 4.00 x 48.00	152 x 102 x 1219	4.25	108	16	15	15
—	6460 G NK	—	—	6.00 x 4.00 x 60.00	152 x 102 x 1524	4.25	108	16	19	19
—	6472 G NK	—	—	6.00 x 4.00 x 72.00	152 x 102 x 1829	4.25	108	16	23	23
—	64120 G NK	—	—	6.00 x 4.00 x 120.00	152 x 102 x 3048	4.25	108	16	39	39
6612 G	6612 G NK	6612 GGV	6612 GGV NK	6.00 x 6.00 x 12.00	152 x 152 x 305	4.25	108	16	3	3
6618 G	6618 G NK	—	6618 GGV NK	6.00 x 6.00 x 18.00	152 x 152 x 457	4.25	108	16	5	5
6624 G	6624 G NK	6624 GGV	6624 GGV NK	6.00 x 6.00 x 24.00	152 x 152 x 610	4.25	108	16	7	7
6636 G	6636 G NK	6636 GGV	6636 GGV NK	6.00 x 6.00 x 36.00	152 x 152 x 914	4.25	108	16	11	11
6648 G	6648 G NK	6648 GGV	6648 GGV NK	6.00 x 6.00 x 48.00	152 x 152 x 1219	4.25	108	16	15	15
6660 G	6660 G NK	6660 GGV	6660 GGV NK	6.00 x 6.00 x 60.00	152 x 152 x 1524	4.25	108	16	19	19
6672 G	6672 G NK	6672 GGV	6672 GGV NK	6.00 x 6.00 x 72.00	152 x 152 x 1829	4.25	108	16	23	23
66120 G	66120 G NK	66120 GGV	66120 GGV NK	6.00 x 6.00 x 120.00	152 x 152 x 3048	4.25	108	16	39	39
8812 G	8812 G NK	8812 GGV	8812 GGV NK	8.00 x 8.00 x 12.00	203 x 203 x 305	6.00	152	16	3	3
8818 G	8818 G NK	—	8818 GGV NK	8.00 x 8.00 x 18.00	203 x 203 x 457	6.00	152	16	5	5
8824 G	8824 G NK	8824 GGV	8824 GGV NK	8.00 x 8.00 x 24.00	203 x 203 x 610	6.00	152	16	7	7
8836 G	8836 G NK	8836 GGV	8836 GGV NK	8.00 x 8.00 x 36.00	203 x 203 x 914	6.00	152	16	11	11
8848 G	8848 G NK	8848 GGV	8848 GGV NK	8.00 x 8.00 x 48.00	203 x 203 x 1219	6.00	152	16	15	15
8860 G	8860 G NK	8860 GGV	8860 GGV NK	8.00 x 8.00 x 60.00	203 x 203 x 1524	6.00	152	16	19	19
8872 G	8872 G NK	8872 GGV	8872 GGV NK	8.00 x 8.00 x 72.00	203 x 203 x 1829	6.00	152	16	23	23
88120 G	88120 G NK	88120 GGV	88120 GGV NK	8.00 x 8.00 x 120.00	203 x 203 x 3048	6.00	152	16	39	39

See page 10 for 10"x10" and 12"x12" wireway.

Notes: Dimensions are in inches. Millimeters shown are for reference only. Data subject to change without notice.

Lay-In Wireway
Type 1 Screw Cover - Painted & Galvanized

Illustration Sheet and Catalog Number **Subclass: Painted - AK1 & Galvanized - Z40**

Wireway Catalog Number				Wireway Size					Knockout Quantity	
Painted		Galvanized		Height x Depth x Length Ax B x C		D				
KO	No KO	KO	No KO	in.	mm	in.	mm	Gauge	Top	Bottom
101012 G	101012 G NK	—	101012 GGV NK	10.00 x 10.00 x 12.00	254 x 254 x 305	8.00	203	16	3	3
101024 G	101024 G NK	—	101024 GGV NK	10.00 x 10.00 x 24.00	254 x 254 x 610	8.00	203	16	7	7
101036 G	101036 G NK	—	101036 GGV NK	10.00 x 10.00 x 36.00	254 x 254 x 914	8.00	203	16	11	11
101048 G	101048 G NK	—	101048 GGV NK	10.00 x 10.00 x 48.00	254 x 254 x 1219	8.00	203	16	15	15
101060 G	101060 G NK	—	101060 GGV NK	10.00 x 10.00 x 60.00	254 x 254 x 1524	8.00	203	16	19	19
101072 G	101072 G NK	—	101072 GGV NK	10.00 x 10.00 x 72.00	254 x 254 x 1829	8.00	203	16	23	23
1010120 G	1010120 G NK	—	1010120 GGV NK	10.00 x 10.00 x 120.00	254 x 254 x 3048	8.00	203	16	39	39
121212 G	121212 G NK	—	121212 GGV NK	12.00 x 12.00 x 12.00	305 x 305 x 305	10.00	254	16	3	3
121224 G	121224 G NK	—	121224 GGV NK	12.00 x 12.00 x 24.00	305 x 305 x 610	10.00	254	16	7	7
121236 G	121236 G NK	—	121236 GGV NK	12.00 x 12.00 x 36.00	305 x 305 x 914	10.00	254	16	11	11
121248 G	121248 G NK	—	121248 GGV NK	12.00 x 12.00 x 48.00	305 x 305 x 1219	10.00	254	16	15	15
121260 G	121260 G NK	—	121260 GGV NK	12.00 x 12.00 x 60.00	305 x 305 x 1524	10.00	254	16	19	19
121272 G	121272 G NK	—	121272 GGV NK	12.00 x 12.00 x 72.00	305 x 305 x 1829	10.00	254	16	23	23
1212120 G	1212120 G NK	—	1212120 GGV NK	12.00 x 12.00 x 120.00	305 x 305 x 3048	10.00	254	16	39	39

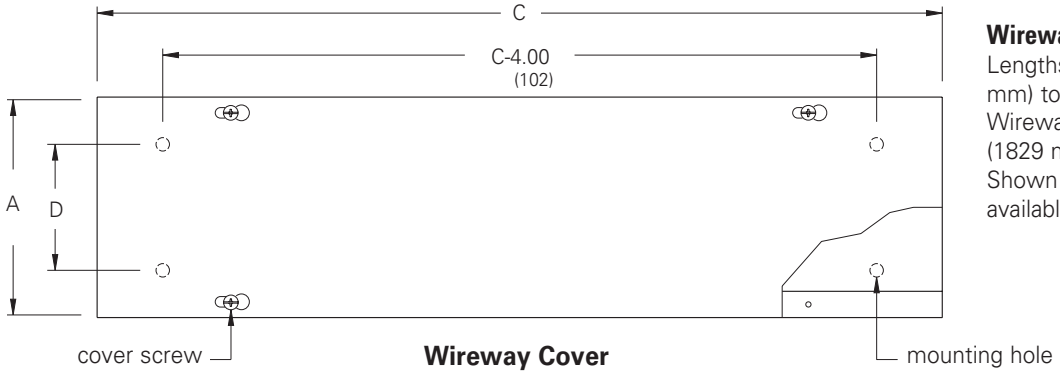

Wireway Cover

Wireway Section
Lengths from 12.00" (305 mm) to 120.00" (3048 mm). Wireway exceeding 72.00" (1829 mm) has two covers. Shown with KO's, also available without.

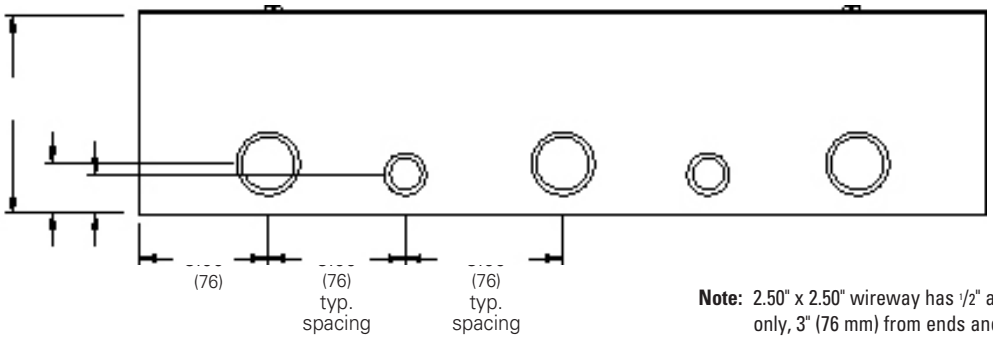

Wireway Side

Knockout sizes:
H = 3/4" or 1/2" conduit
J = 1 1/4" or 1" conduit

Note: 2.50" x 2.50" wireway has 1/2" and 3/4" 2-way knockouts (H) only, 3" (76 mm) from ends and 3" (76 mm) on center. Additional mounting holes are furnished when C dimension is over 60.00" (1524 mm).

Notes: Dimensions are in inches. Millimeters shown are for reference only. Data subject to change without notice.

Lay-In Wireway
Type 1 Screw Cover - Painted & Galvanized

Illustration Sheet and Catalog Number

Subclass: Painted - AKF & Galvanized - Z4F

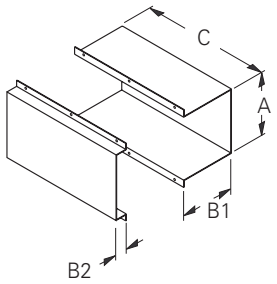

Telescopic Fitting

Adjustable length up to 10.00" (254 mm). Wraps around the two near joining wireway lengths to achieve a continuous run.

Telescopic Fitting

Catalog Number Painted	Catalog Number Galvanized	A in.	A mm	B1 in.	B1 mm	B2 in.	B2 mm	C in.	C mm
22 FTF	22 FTFGV	2.75	70	1.75	44	1.12	28	12.00	305
33 FTF	—	3.25	83	2.25	57	1.12	28	12.00	305
44 FTF	44 FTFGV	4.25	108	3.25	83	1.12	28	12.00	305
64 FTF	—	6.25	159	3.25	83	1.12	28	12.00	305
66 FTF	66 FTFGV	6.25	159	5.25	133	1.12	28	12.00	305
88 FTF	88 FTFGV	8.25	210	7.25	184	1.12	28	12.00	305
1010 FTF	1010 FTFGV	10.25	260	9.25	235	1.12	28	12.00	305
1212 FTF	1212 FTFGV	12.25	311	11.25	286	1.12	28	12.00	305

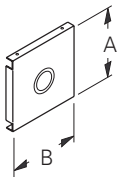

End

Used to terminate wireway or fitting. 2.50" x 2.50" (64 mm x 64 mm) has a 0.75" knockout. 3.00" x 3.00" (76 mm x 76 mm) through 8.00" x 8.00" (203 mm x 203 mm) ends have a 1.50"-1.25" concentric 2-way KO. 10.00" x 10.00" (254 mm x 254 mm) ends and larger have a 3.00" - 2.50" concentric 2-way KO for terminating on pipe or conduit. Also available without KO.

End

Catalog Number Painted KO	Catalog Number Painted No KO	Catalog Number Galvanized KO	Catalog Number Galvanized No KO	A in.	A mm	B in.	B mm
22 E	22 E NK	22 EGV	22 EGV NK	2.50	64	2.50	64
33 E	33 E NK	—	—	3.00	76	3.00	76
44 E	44 E NK	44 EGV	44 EGV NK	4.00	102	4.00	102
64 E	64 E NK	—	—	6.00	152	4.00	102
66 E	66 E NK	66 EGV	66 EGV NK	6.00	152	6.00	152
88 E	88 E NK	88 EGV	88 EGV NK	8.00	203	8.00	203
1010 E	1010 E NK	1010 EGV	1010 EGV NK	10.00	254	10.00	254
1212 E	1212 E NK	1212 EGV	1212 EGV NK	12.00	305	12.00	305

See drawing for KO sizes.

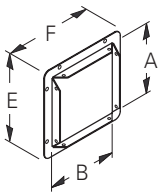

Wireway End Flange

Allows for a secure connection of wire-way to an adjoining enclosure or wall.

Wireway End Flange

Catalog Number Painted	Catalog Number Galvanized	A in.	A mm	B in.	B mm	E in.	E mm	F in.	F mm
22 GF	22 GFGV	2.50	64	2.50	64	4.00	102	4.00	102
33 GF	—	3.00	76	3.00	76	4.50	114	4.50	114
44 GF	44 GFGV	4.00	102	4.00	102	5.50	140	5.50	140
64 GF	—	6.00	152	4.00	102	7.50	191	5.50	140
66 GF	66 GFGV	6.00	152	6.00	152	7.50	191	7.50	191
88 GF	88 GFGV	8.00	203	8.00	203	9.50	241	9.50	241
1010 GF	1010 GFGV	10.00	254	10.00	254	11.50	292	11.50	292
1212 GF	1212 GFGV	12.00	305	12.00	305	13.50	343	13.50	343

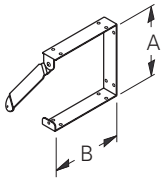

Connector

Swing gate allows for lay-in of wire and cable.

Connector

Catalog Number Galvanized	A in.	A mm	B in.	B mm
22 C	2.50	64	2.50	64
33 C	3.00	76	3.00	76
44 C	4.00	102	4.00	102
64 C	6.00	152	4.00	102
66 C	6.00	152	6.00	152
88 C	8.00	203	8.00	203
1010 C	10.00	254	10.00	254
1212 C	12.00	305	12.00	305

Notes: Dimensions are in inches. Millimeters shown are for reference only. Data subject to change without notice.

Lay-In Wireway
Type 1 Screw Cover - Painted & Galvanized
Illustration Sheet and Catalog Number

Subclass: Painted - AKF & Galvanized - Z4F

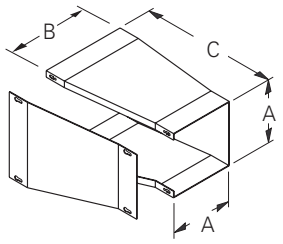

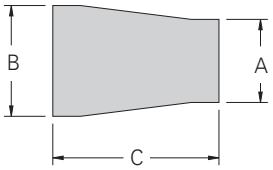

Reducer
B dimensions (see catalog table), correspond to the large end opening. Used to reduce or enlarge wireway runs.

Reducer							
Catalog Number		A		B		C	
Painted	Galvanized	in.	mm	in.	mm	in.	mm
2233 FR	—	2.50	64	3.00	76	6.00	152
3344 FR	—	3.00	76	4.00	102	8.00	203
4466 FR	—	4.00	102	6.00	152	10.00	254
6688 FR	—	6.00	152	8.00	203	12.00	305
881010 FR	—	8.00	203	10.00	254	12.00	305
10101212 FR	—	10.00	254	12.00	305	16.00	406

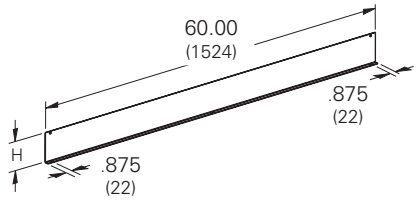

Barrier, Bolt-On
For those installations that require separated wiring compartments.

Barrier Kit, 60" Bolt-On						
Catalog Number	Size		Length		H	
Painted	in.	mm	in.	mm	in.	mm
22-12BK*	2.50 x 2.50	64 x 64	60.00	1524	1.88	48
33-12BK*	3.00 x 3.00	76 x 76	60.00	1524	2.25	57
44-12BK*	4.00 x 4.00	102 x 102	60.00	1524	3.00	76
66-12BK*	6.00 x 6.00	152 x 152	60.00	1524	4.50	114
88-12BK*	8.00 x 8.00	203 x 203	60.00	1524	6.00	152
1010-12BK*	10.00 x 10.00	254 x 254	60.00	1524	8.00	203
1212-12BK*	12.00 x 12.00	305 x 305	60.00	1524	10.50	267

*Not UL or CSA listed fitting.

Wireway Hangers

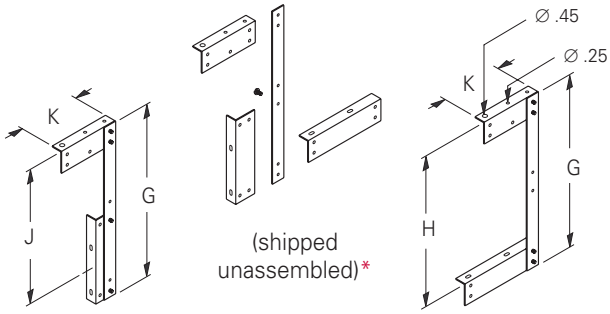

Side Cover Assembly
For those installations where the wireway cover must be removed from the side.

Top Cover Assembly
For those installations where the wireway cover must be removed from the top.

Wireway Hanger									
Catalog Number		G		H		J		K	
Painted	Galvanized	in.	mm	in.	mm	in.	mm	in.	mm
22 FH	—	8.50	216	6.50	165	6.50	165	2.87	73
33 FH	—	10.50	267	8.50	216	9.00	229	3.87	98
44 FH	—	12.50	318	10.50	267	10.37	263	4.87	124
66 FH	—	16.50	419	14.50	368	13.50	343	5.87	149
88 FH	—	20.50	521	18.50	470	16.75	425	6.87	174
1010 FH*	—	24.50	622	22.50	572	19.75	502	7.87	200
1212 FH*	—	28.50	724	26.50	673	22.75	578	8.87	225

*Hangers are shipped welded in the top cover assembly position.

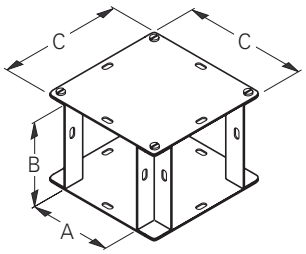

90° Elbow-Tee-Cross
Designed for left or right 90° turns or as a tee or cross by removing closure plates. Includes two (2) closure plates and hardware.

90° Elbow - Tee - Cross							
Catalog Number		A		B		C	
Painted	Galvanized	in.	mm	in.	mm	in.	mm
22 LTX	22 LTXGV	2.50	64	2.50	64	4.50	114
33 LTX	—	3.00	76	3.00	76	5.00	127
44 LTX	44 LTXGV	4.00	102	4.00	102	6.00	152
64 LTX	—	6.00	152	4.00	102	8.00	203
66 LTX	66 LTXGV	6.00	152	6.00	152	8.00	203
88 LTX	88 LTXGV	8.00	203	8.00	203	10.00	254
1010 LTX	1010 LTXGV	10.00	254	10.00	254	12.00	305
1212 LTX	1212 LTXGV	12.00	305	12.00	305	14.00	356

Notes: Dimensions are in inches. Millimeters shown are for reference only. Data subject to change without notice.

Lay-In Wireway
Type 1 - Painted & Galvanized
Illustration Sheet and Catalog Number

Wireway 90˚ Elbows Screw Cover

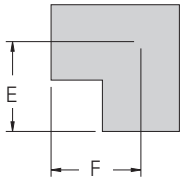

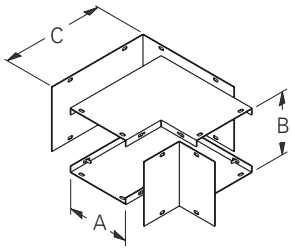

Combo Opening
Specially designed for removing either the inside or outside cover to allow a continuous run with 90˚ turns.

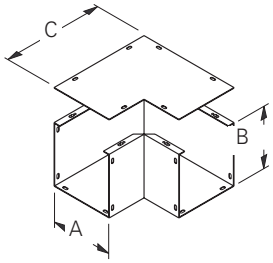

Side Opening
Side cover is removable to allow a continuous run on designs with 90˚ turns.

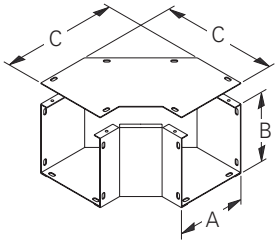

Sweep Elbow
Side cover design with a larger radius for 90° sweeping turns.

Subclass: Painted - AKF & Galvanized - Z4F

90° Elbow - Screw Cover

Catalog Number Painted	Galvanized	A in.	A mm	B in.	B mm	C in.	C mm	E in.	E mm	F in.	F mm
22 L COMBO	22 L COMBOGV	2.50	64	2.50	64	5.59	142	4.28	109	4.28	109
33 L COMBO	—	3.00	76	3.00	76	6.09	155	4.50	114	4.50	114
44 L COMBO	44 L COMBOGV	4.00	102	4.00	102	7.09	180	5.00	127	5.00	127
64 L COMBO	—	4.00	102	6.00	152	10.09	256	5.00	127	5.00	127
66 L COMBO	66 L COMBOGV	6.00	152	6.00	152	10.09	256	7.00	178	7.00	178
88 L COMBO	88 L COMBOGV	8.00	203	8.00	203	12.09	307	8.00	203	8.00	203
1010 L COMBO	1010 L COMBOGV	10.00	254	10.00	254	14.09	358	9.00	229	9.00	229
1212 L COMBO	1212 L COMBOGV	12.00	305	12.00	305	16.09	409	10.00	254	10.00	254
22 L SIDE	—	2.50	64	2.50	64	5.59	142	4.28	109	4.28	109
33 L SIDE	—	3.00	76	3.00	76	6.09	155	4.50	114	4.50	114
44 L SIDE	—	4.00	102	4.00	102	7.09	180	5.00	127	5.00	127
64 L SIDE	—	6.00	152	4.00	102	10.09	256	7.00	178	7.00	178
66 L SIDE	—	6.00	152	6.00	152	10.09	256	7.00	178	7.00	178
88 L SIDE	—	8.00	203	8.00	203	12.09	307	8.00	203	8.00	203
1010 L SIDE	—	10.00	254	10.00	254	14.09	358	10.00	254	9.00	229
1212 L SIDE	—	12.00	305	12.00	305	16.09	409	10.00	254	10.00	254
22 L SWEEP	22 L SWEEPGV	2.50	64	2.50	64	5.63	143	4.25	108	4.25	108
33 L SWEEP	—	3.00	76	3.00	76	8.41	214	6.84	174	6.84	174
44 L SWEEP	44 L SWEEPGV	4.00	102	4.00	102	9.41	239	7.34	186	7.34	186
64 L SWEEP	—	6.00	152	4.00	102	11.41	290	8.34	212	8.34	212
66 L SWEEP	66 L SWEEPGV	6.00	152	6.00	152	11.41	290	8.34	212	8.34	212
88 L SWEEP	88 L SWEEPGV	8.00	203	8.00	203	13.41	341	9.34	237	9.34	237
1010 L SWEEP	1010 L SWEEPGV	10.00	254	10.00	254	15.41	391	10.34	263	10.34	263
1212 L SWEEP	1212 L SWEEPGV	12.00	305	12.00	305	17.41	442	11.34	288	11.34	288

Wireway 90˚ Elbows Hinged Cover

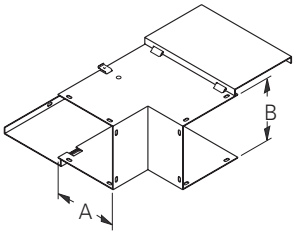

Outside Opening
Specifically designed to have the outside covers hinge open to allow a continuous run with 90˚ turns.

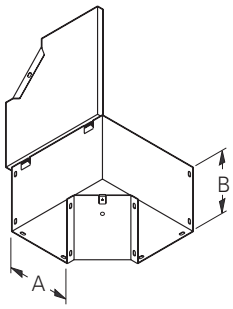

Side Opening
Side cover is hinged to allow a continuous run on designs with 90˚ sweeping turns.

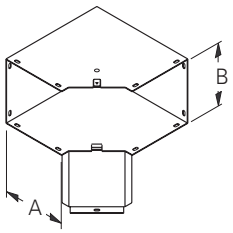

Inside Opening
Specifically designed to have only the inside cover hinge open to allow a continuous run with 90˚ turns.

90° Elbow - Hinged Cover

Catalog Number Painted	A in.	A mm	B in.	B mm	E in.	E mm	F in.	F mm
33 FL IN	3.00	76	3.00	76	5.50	140	5.50	140
44 FL IN	4.00	102	4.00	102	6.00	152	6.00	152
66 FL IN	6.00	152	6.00	152	7.00	178	7.00	178
88 FL IN	8.00	203	8.00	203	8.00	203	8.00	203
1010 FL IN	10.00	254	10.00	254	9.00	229	9.00	229
1212 FL IN	12.00	305	12.00	305	10.00	254	10.00	254
33 FL OUT	3.00	76	3.00	76	5.50	140	5.50	140
44 FL OUT	4.00	102	4.00	102	6.00	152	6.00	152
66 FL OUT	6.00	152	6.00	152	7.00	178	7.00	178
88 FL OUT	8.00	203	8.00	203	8.00	203	8.00	203
1010 FL OUT	10.00	254	10.00	254	9.00	229	9.00	229
1212 FL OUT	12.00	305	12.00	305	10.00	254	10.00	254
33 FL SIDE	3.00	76	3.00	76	5.50	140	5.50	140
44 FL SIDE	4.00	102	4.00	102	6.00	152	6.00	152
66 FL SIDE	6.00	152	6.00	152	7.00	178	7.00	178
88 FL SIDE	8.00	203	8.00	203	8.00	203	8.00	203
1010 FL SIDE	10.00	254	10.00	254	9.00	229	9.00	229
1212 FL SIDE	12.00	305	12.00	305	10.00	254	10.00	254

Notes: Dimensions are in inches. Millimeters shown are for reference only. Data subject to change without notice.

Lay-In Wireway
Type 1 Screw Cover - Painted & Galvanized

Illustration Sheet and Catalog Number

Subclass: Painted - AKF & Galvanized - Z4F

Wireway 45˚ Elbows

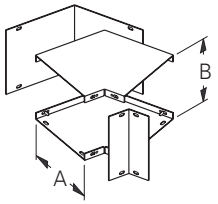

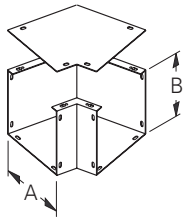

Combo Opening
Similar to the 90˚ elbow design except a 45˚ turn. Both inside and outside covers removable.

Side Opening
Similar to the 90˚ side opening design except for a 45˚ turn. Excellent for combining two to make a gradual sweeping 90˚ turn.

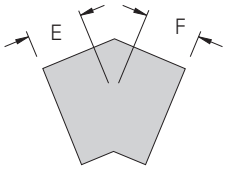

45° Elbow

Catalog Number Painted	Catalog Number Galvanized	A in.	A mm	B in.	B mm	E in.	E mm	F in.	F mm
2245 L COMBO	2245 L COMBOGV	2.50	64	2.50	64	1.72	44	1.72	44
3345 L COMBO	—	3.00	76	3.00	76	2.56	65	2.56	65
4445 L COMBO	4445 L COMBOGV	4.00	102	4.00	102	2.75	70	2.75	70
6445 L COMBO	—	4.00	102	6.00	153	2.75	70	2.75	70
6645 L COMBO	6645 L COMBOGV	6.00	153	6.00	153	3.18	81	3.18	81
8845 L COMBO	8845 L COMBOGV	8.00	203	8.00	203	3.62	92	3.62	92
101045 L COMBO	101045 L COMBOGV	10.00	254	10.00	254	4.06	103	4.06	103
121245 L COMBO	121245 L COMBOGV	12.00	305	12.00	305	4.50	114	4.50	114
2245 L SIDE	—	2.50	64	2.50	64	1.97	50	1.97	50
3345 L SIDE	—	3.00	76	3.00	76	2.56	65	2.56	65
4445 L SIDE	—	4.00	102	4.00	102	2.75	70	2.75	70
6445 L SIDE	—	6.00	153	4.00	102	3.18	81	3.18	81
6645 L SIDE	—	6.00	153	6.00	153	3.18	81	3.18	81
8845 L SIDE	—	8.00	203	8.00	203	3.62	92	3.62	92
101045 L SIDE	—	10.00	254	10.00	254	4.06	103	4.06	103
121245 L SIDE	—	12.00	305	12.00	305	4.50	114	4.50	114

Tee
Side cover design where a "T" junction is necessary.

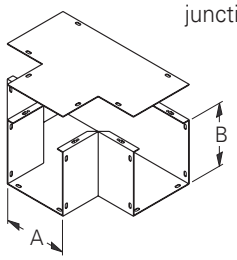

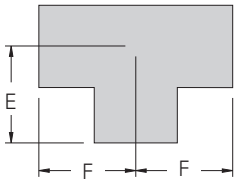

Tee

Catalog Number Painted	Catalog Number Galvanized	A in.	A mm	B in.	B mm	E in.	E mm	F in.	F mm
22 T	22 TGV	2.50	64	2.50	64	4.25	108	4.25	108
33 T	—	3.00	76	3.00	76	4.50	114	4.50	114
44 T	44 TGV	4.00	102	4.00	102	5.00	127	5.00	127
64 T	—	6.00	153	4.00	102	7.00	178	7.00	178
66 T	66 TGV	6.00	153	6.00	153	7.00	178	7.00	178
88 T	88 TGV	8.00	203	8.00	203	8.00	203	8.00	203
1010 T	1010 TGV	10.00	254	10.00	254	9.00	229	9.00	229
1212 T	1212 TGV	12.00	305	12.00	305	10.00	254	10.00	254

Cross
Side cover and broad body design to junction cable run in four directions.

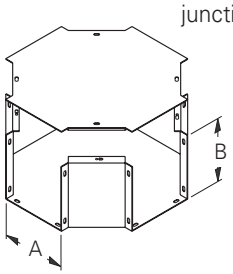

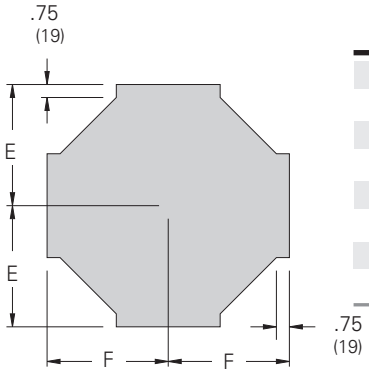

Cross

Catalog Number Painted	Catalog Number Galvanized	A in.	A mm	B in.	B mm	E in.	E mm	F in.	F mm
22 X	22 XGV	2.50	64	2.50	64	4.25	108	4.25	108
33 X	—	3.00	76	3.00	76	5.62	143	5.62	143
44 X	44 XGV	4.00	102	4.00	102	6.12	155	6.12	155
64 X	—	6.00	152	4.00	152	7.12	181	7.12	181
66 X	66 XGV	6.00	152	6.00	152	7.12	181	7.12	181
88 X	88 XGV	8.00	203	8.00	203	8.12	206	8.12	206
1010 X	1010 XGV	10.00	254	10.00	254	9.12	232	9.12	232
1212 X	1212 XGV	12.00	305	12.00	305	10.12	257	10.12	25

Notes: Dimensions are in inches. Millimeters shown are for reference only. Data subject to change without notice.

Lay-In Wireway
Type 1 Quick-Connect Hinge Cover
Data Sheet

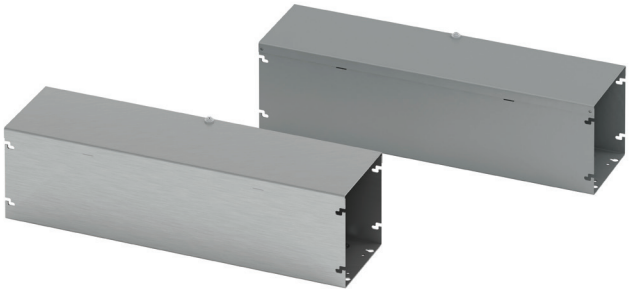

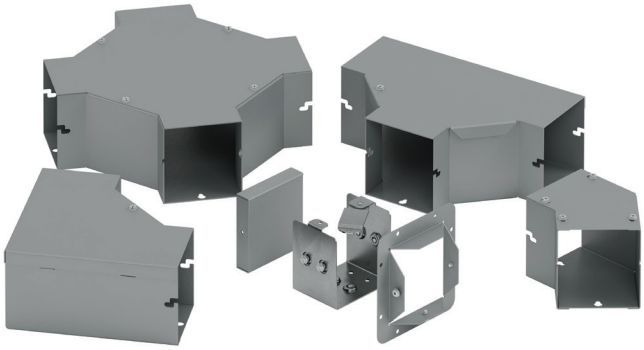

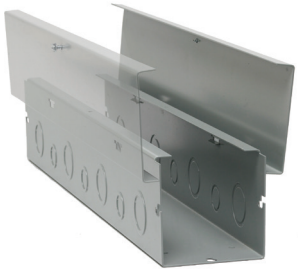

Reversible and removable hinge cover

Pre-installed hardware on quick connector

Application
- Houses runs of control and power cable
- Used for cable and wire junction, distribution and termination

Standards
- UL 870 listed, Type 1
- CSA C22.2 No. 26 certified, Type 1
- Conforms to NEMA standard for Type 1

Finish
- Wash and phosphate undercoat
- ANSI 61 gray acrylic electrocoat finish

Accessories
- Touch-up paint
- See Accessories section

Protected by U.S. Patents 7,525,044 & 7,762,042

Construction
- Wireway body and cover are fabricated from code gauge steel, (see table, page 16)
- Wireway body has mounting holes on the back
- Wireway is available with or without knockouts
- Wireway fittings have no knockouts, ends are available with or without knockouts
- Wireway exceeding 72 inches in length has two overlapping covers
- Variety of fittings allow runs which can change directions, junction and terminate
- Wireway connectors (sold separately) have a gate feature which can swing completely open allowing for lay-in of wire and cable
- Universal style connectors are also available for adapting to other manufacturer's wireway, (see page 17)
- Except for wireway ends, completely interchangeable with Type 1 screw cover wireway and fittings through use of the adapter style connector HSCA, (see page 17)

Discount Schedule: A2

Subclass: HS1

Notes: We can provide special sizes, finishes and other modifications. Consult the factory for your special requirements.

Lay-In Wireway
Type 1 Quick-Connect Hinge Cover
Illustration Sheet and Catalog Number

Subclass: HS1

Wireway Catalog Number		Wireway Size Height x Depth x Length A x B x C		D			Knockout Quantity	
KO	No KO	in.	mm	in.	mm	Gauge	Top	Bottom
2212 HS	2212 HS NK	2.50 x 2.50 x 12.00	63 x 63 x 305	1.25	32	16	3	3
2224 HS	2224 HS NK	2.50 x 2.50 x 24.00	63 x 63 x 610	1.25	32	16	7	7
2236 HS	2236 HS NK	2.50 x 2.50 x 36.00	63 x 63 x 914	1.25	32	16	11	11
2248 HS	2248 HS NK	2.50 x 2.50 x 48.00	63 x 63 x 1219	1.25	32	16	15	15
2260 HS	2260 HS NK	2.50 x 2.50 x 60.00	63 x 63 x 1524	1.25	32	16	19	19
2272 HS	2272 HS NK	2.50 x 2.50 x 72.00	63 x 63 x 1829	1.25	32	16	23	23
22120 HS	22120 HS NK	2.50 x 2.50 x 120.00	63 x 63 x 3048	1.25	32	16	39	39
4412 HS	4412 HS NK	4.00 x 4.00 x 12.00	102 x 102 x 305	2.75	70	16	3	3
4424 HS	4424 HS NK	4.00x x 4.00 x 24.00	102 x 102 x 610	2.75	70	16	7	7
4436 HS	4436 HS NK	4.00 x 4.00 x 36.00	102 x 102 x 914	2.75	70	16	11	11
4448 HS	4448 HS NK	4.00 x 4.00 x 48.00	102 x 102 x 1219	2.75	70	16	15	15
4460 HS	4460 HS NK	4.00 x 4.00 x 60.00	102 x 102 x 1524	2.75	70	16	19	19
4472 HS	4472 HS NK	4.00 x 4.00 x 72.00	102 x 102 x 1829	2.75	70	16	23	23
44120 HS	44120 HS NK	4.00 x 4.00 x 120.00	102 x 102 x 3048	2.75	70	16	39	39
6612 HS	6612 HS NK	6.00 x 6.00 x 12.00	152 x 152 x 305	4.25	108	16	3	3
6624 HS	6624 HS NK	6.00 x 6.00 x 24.00	152 x 152 x 610	4.25	108	16	7	7
6636 HS	6636 HS NK	6.00 x 6.00 x 36.00	152 x 152 x 914	4.25	108	16	11	11
6648 HS	6648 HS NK	6.00 x 6.00 x 48.00	152 x 152 x 1219	4.25	108	16	15	15
6660 HS	6660 HS NK	6.00 x 6.00 x 60.00	152 x 152 x 1524	4.25	108	16	19	19
6672 HS	6672 HS NK	6.00 x 6.00 x 72.00	152 x 152 x 1829	4.25	108	16	23	23
66120 HS	66120 HS NK	6.00 x 6.00 x 120.00	152 x 152 x 3048	4.25	108	16	39	39
8812 HS	8812 HS NK	8.00 x 8.00 x 12.00	203 x 203 x 305	6.00	152	16	3	3
8824 HS	8824 HS NK	8.00 x 8.00 x 24.00	203 x 203 x 610	6.00	152	16	7	7
8836 HS	8836 HS NK	8.00 x 8.00 x 36.00	203 x 203 x 914	6.00	152	16	11	11
8848 HS	8848 HS NK	8.00 x 8.00 x 48.00	203 x 203 x 1219	6.00	152	16	15	15
8860 HS	8860 HS NK	8.00 x 8.00 x 60.00	203 x 203 x 1524	6.00	152	16	19	19
8872 HS	8872 HS NK	8.00 x 8.00 x 72.00	203 x 203 x 1829	6.00	152	16	23	23
88120 HS	88120 HS NK	8.00 x 8.00 x 120.00	203 x 203 x 3048	6.00	152	16	39	39
101012 HS*	101012 HS NK*	10.00 x 10.00 x 12.00	254 x 254 x 305	8.00	203	16	3	3
101024 HS*	101024 HS NK*	10.00 x 10.00 x 24.00	254 x 254 x 610	8.00	203	16	7	7
101036 HS*	101036 HS NK*	10.00 x 10.00 x 36.00	254 x 254 x 914	8.00	203	16	11	11
101048 HS*	101048 HS NK*	10.00 x 10.00 x 48.00	254 x 254 x 1219	8.00	203	16	15	15
101060 HS*	101060 HS NK*	10.00 x 10.00 x 60.00	254 x 254 x 1524	8.00	203	16	19	19
1010120 HS*	1010120 HS NK*	10.00 x 10.00 x 120.00	254 x 254 x 3048	8.00	203	16	39	39
121212 HS*	121212 HS NK*	12.00 x 12.00 x 12.00	305 x 305 x 305	10.00	254	16	3	3
121224 HS*	121224 HS NK*	12.00 x 12.00 x 24.00	305 x 305 x 610	10.00	254	16	7	7
121236 HS*	121236 HS NK*	12.00 x 12.00 x 36.00	305 x 305 x 914	10.00	254	16	11	11
121248 HS*	121248 HS NK*	12.00 x 12.00 x 48.00	305 x 305 x 1219	10.00	254	16	15	15
121260 HS*	121260 HS NK*	12.00 x 12.00 x 60.00	305 x 305 x 1524	10.00	254	16	19	19
1212120 HS*	1212120 HS NK*	12.00 x 12.00 x 120.00	305 x 305 x 3048	10.00	254	16	39	39

*Not CSA listed

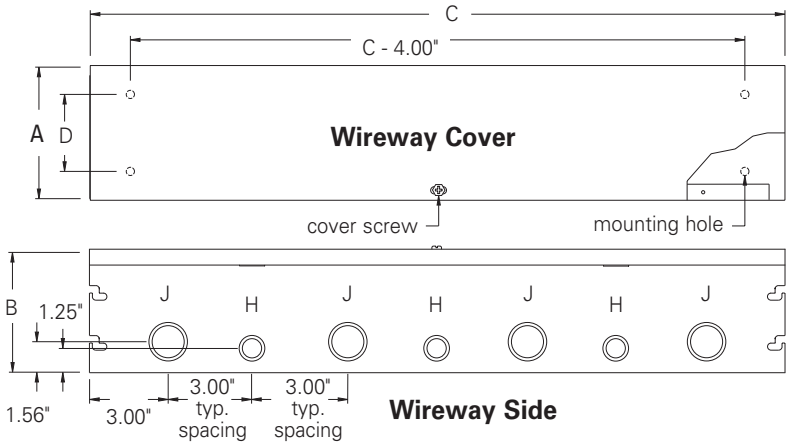

Wireway Section
Lengths from 12.00" (305 mm) to 120.00" (305 mm). Wireway exceeding 72.00" (1829 mm) has two covers. Shown with KO's, also available without.

Knockout sizes:
H = 3/4" or 1/2" conduit
J = 1 1/4" or 1" conduit

Notes: Additional mounting holes are furnished when C dimension is over 60.00" (1524 mm).
Dimensions are in inches. Millimeters shown are for reference only. Data subject to change without notice.

Lay-In Wireway
Type 1 Quick-Connect Hinge Cover
Illustration Sheet and Catalog Number

Subclass: HSF

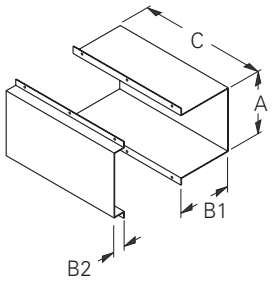

Telescopic Fitting
Adjustable length up to 10.00" (254 mm). Wraps around the two near joining wireway lengths to achieve a continuous run.

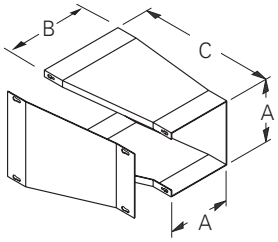

Reducer
B dimensions (see catalog table), correspond to the large end opening. Used to reduce or enlarge wireway runs. Removable cover is secured with screws.

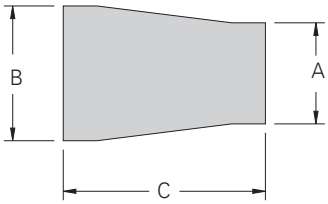

Telescopic Fitting

Catalog Number	A		B1		B2		C	
	in.	mm	in.	mm	in.	mm	in.	mm
22 FTF	2.75	70	1.75	44	1.12	28	12.00	305
33FTF	3.25	83	2.25	57	1.12	28	12.00	305
44 FTF	4.25	108	3.25	83	1.12	28	12.00	305
66 FTF	6.25	159	5.25	133	1.12	28	12.00	305
88 FTF	8.25	210	7.25	184	1.12	28	12.00	305
1010 FTF	10.25	260	9.25	235	1.12	28	12.00	305
1212 FTF	12.25	311	11.25	286	1.12	28	12.00	305

Reducer

Catalog Number	A		B		C	
	in.	mm	in.	mm	in.	mm
2233 FR *	2.50	63	3.00	76	6.00	152
3344 FR *	3.00	76	4.00	102	8.00	203
4466 FR *	4.00	102	6.00	152	10.00	254
6688 FR *	6.00	152	8.00	203	12.00	305
881010 FR *	8.00	203	10.00	254	12.00	305
10101212 FR *	10.00	254	12.00	305	16.00	406

* Requires use of HSCA Adapter Style Connector.

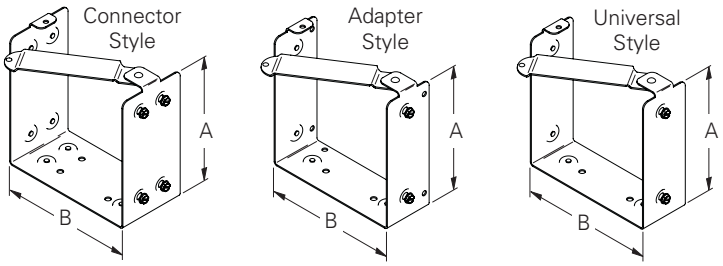

Connector
Swing gate allows for lay-in of wire and cable.

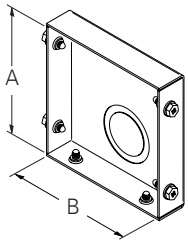

End
Used to terminate wireway or fitting. Shown with KO, also available without.

Drawing shows screws in place. Screws are actually packaged in plastic bags.

Connector

Catalog Number			A		B	
Connector Style	Adapter Style	Universal Style	in.	mm	in.	mm
22 HSC	22 HSCA	22 HSCU	2.50	63	2.50	63
44 HSC	44 HSCA	44 HSCU	4.00	102	4.00	102
66 HSC	66 HSCA	66 HSCU	6.00	152	6.00	152
88 HSC	88 HSCA	88 HSCU	8.00	203	8.00	203
1010 HSC	1010 HSCA	1010 HSCU	10.00	254	10.00	254
1212 HSC	1212 HSCA	1212 HSCU	12.00	305	12.00	305

HSC - Standard Quick Connector
HSCA - For adapting to Type 1 Screw Cover Wireway
HSCU - For adapting to competitive Wireway

End

Catalog Number		A		B		KO	
KO	No KO	in.	mm	in.	mm	in.	mm
22 HSE	22 HSE NK	2.50	63	2.50	63	1.50	38
44 HSE	44 HSE NK	4.00	102	4.00	102	1.50	38
66 HSE	66 HSE NK	6.00	152	6.00	152	1.50	38
88 HSE	88 HSE NK	8.00	203	8.00	203	1.50	38
1010 HSE	1010 HSE NK	10.00	254	10.00	254	3.00	76
1212 HSE	1212 HSE NK	12.00	305	12.00	305	3.00	76

Notes: Dimensions are in inches. Millimeters shown are for reference only. Data subject to change without notice.

Lay-In Wireway
Type 1 Quick-Connect Hinge Cover
Illustration Sheet and Catalog Number

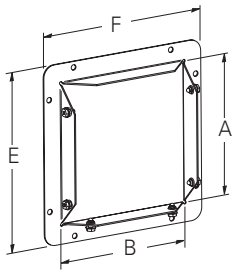

Wireway End Flange
Allows for a secure connection of wireway to an adjoining enclosure or wall.

Wireway End Flange

Catalog Number	A		B		E		F	
	in.	mm	in.	mm	in.	mm	in.	mm
22 HSF	2.50	63	2.50	63	4.00	102	4.00	102
44 HSF	4.00	102	4.00	102	5.50	140	5.50	140
66 HSF	6.00	152	6.00	152	7.50	191	7.50	191
88 HSF	8.00	203	8.00	203	9.50	241	9.50	241
1010 HSF	10.00	254	10.00	254	11.50	292	11.50	292
1212 HSF	12.00	305	12.00	305	13.50	343	13.50	343

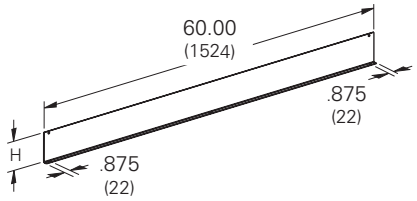

Barrier, Bolt-On
For those installations that require separate wiring compartments.

Barrier Kit, 60" Bolt-On

Catalog Number	Size		Length		H	
	in.	mm	in.	mm	in.	mm
22-12BK*	2.50 x 2.50	64 x 64	60.00	1524	1.88	48
33-12BK*	3.00 x 3.00	76 x 76	60.00	1524	2.25	57
44-12BK*	4.00 x 4.00	102 x 102	60.00	1524	3.00	76
66-12BK*	6.00 x 6.00	152 x 152	60.00	1524	4.50	114
88-12BK*	8.00 x 8.00	203 x 203	60.00	1524	6.00	152
1010-12BK*	10.00 x 10.00	254 x 254	60.00	1524	8.00	203
1212-12BK*	12.00 x 12.00	305 x 305	60.00	1524	10.50	267

*Not UL or CSA listed fitting.

Subclass: HSF

Wireway Hangers

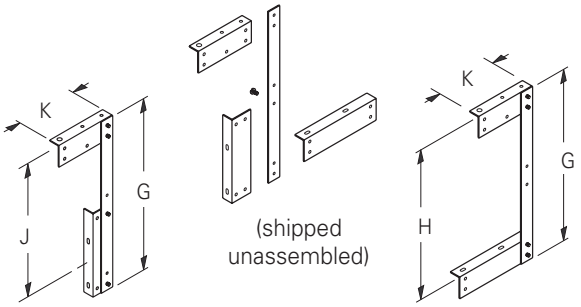

Side Cover Assembly
For those installations where the wireway cover must be hinged at the side.

Top Cover Assembly
For those installations where the wireway cover must be hinged at the top.

Wireway Hanger

Catalog Number	G		H		J		K	
	in.	mm	in.	mm	in.	mm	in.	mm
22 FH	8.50	216	8.50	216	6.50	165	2.87	73
44 FH	12.50	318	10.50	267	10.37	263	4.87	121
66 FH	16.50	419	14.50	394	13.50	340	5.87	146
88 FH	20.50	521	18.50	495	16.75	425	6.87	171
1010 FH **	24.50	622	22.50	571	17.25	438	7.87	200
1212 FH **	28.50	724	26.50	673	20.25	514	8.87	225

**Hangers are shipped welded in the top cover assembly position.

Notes: Dimensions are in inches. Millimeters shown are for reference only. Data subject to change without notice.

Lay-In Wireway
Type 1 Quick-Connect Hinge Cover
Illustration Sheet and Catalog Number

Subclass: HSF

Wireway 90˚ Elbows

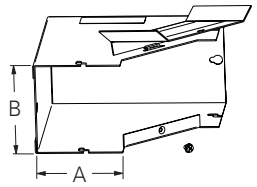

Inside Opening
Specifically designed to have only the inside cover hinge open to allow a continuous run with 90˚ turns.

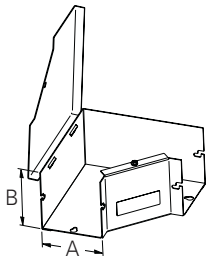

Side Opening
Side cover is hinged to allow a continuous run on designs with 90˚ sweeping turns.

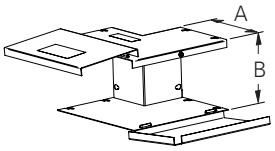

Outside Opening
Specifically designed to have the outside covers hinge open to allow a continuous run with 90˚ turns.

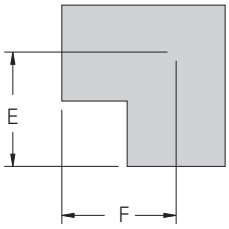

(outside opening)

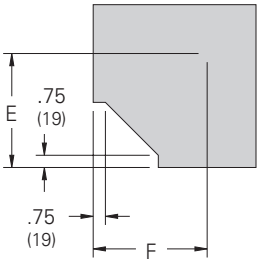

(inside and side opening)

90° Elbow

Catalog Number	A in.	A mm	B in.	B mm	E in.	E mm	F in.	F mm
22 HSL IN	2.50	63	2.50	63	3.31	84	3.31	84
44 HSL IN	4.00	102	4.00	102	4.06	103	4.06	103
66 HSL IN	6.00	152	6.00	152	5.06	128	5.06	128
88 HSL IN	8.00	203	8.00	203	6.06	154	6.06	154
1010 HSL IN	10.00	254	10.00	254	7.06	179	7.06	179
1212 HSL IN	12.00	305	12.00	305	8.06	205	8.06	205
22 HSL OUT	2.50	63	2.50	63	3.38	86	3.38	86
44 HSL OUT	4.00	102	4.00	102	4.09	104	4.09	104
66 HSL OUT	6.00	152	6.00	152	5.09	129	5.09	129
88 HSL OUT	8.00	203	8.00	203	6.09	154	6.09	154
1010 HSL OUT	10.00	254	10.00	254	7.09	180	7.09	180
1212 HSL OUT	12.00	305	12.00	305	8.09	205	8.09	205
22 HSL SIDE	2.50	63	2.50	63	3.50	89	3.50	89
44 HSL SIDE	4.00	102	4.00	102	4.32	110	4.32	110
66 HSL SIDE	6.00	152	6.00	152	5.31	135	5.31	135
88 HSL SIDE	8.00	203	8.00	203	6.31	160	6.31	160
1010 HSL SIDE	10.00	254	10.00	254	7.31	185	7.31	185
1212 HSL SIDE	12.00	305	12.00	305	8.31	211	8.31	211

Wireway 45˚ Elbows

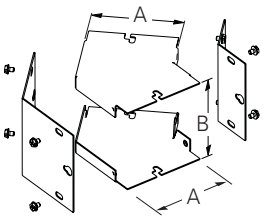

Combo Opening
Designed to achieve a 45˚ turn. Inside and outside removable covers are secured with screws.

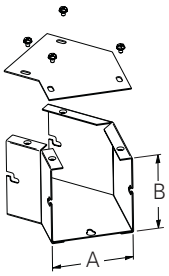

Side Opening
Designed to achieve a 45˚ turn and have the cover removed from the side. Excellent for combining two to make a gradual 90˚ sweep.

45° Elbow

Catalog Number	A in.	A mm	B in.	B mm	E in.	E mm	F in.	F mm
2245 HSL COMBO	2.50	63	2.50	63	1.72	43	1.72	43
4445 HSL COMBO	4.00	102	4.00	102	2.75	70	2.75	70
6645 HSL COMBO	6.00	152	6.00	152	3.18	81	3.18	81
8845 HSL COMBO	8.00	203	8.00	203	3.62	92	3.62	92
101045 HSL COMBO	10.00	254	10.00	254	4.06	103	4.06	103
121245 HSL COMBO	12.00	305	12.00	305	4.50	114	4.50	114
2245 HSL SIDE	2.50	63	2.50	63	1.72	43	1.72	43
4445 HSL SIDE	4.00	102	4.00	102	2.75	70	2.75	70
6645 HSL SIDE	6.00	152	6.00	152	3.18	81	3.18	81
8845 HSL SIDE	8.00	203	8.00	203	3.62	92	3.62	92
101045 HSL SIDE	10.00	254	10.00	254	4.06	103	4.06	103
121245 HSL SIDE	12.00	305	12.00	254	4.50	114	4.50	114

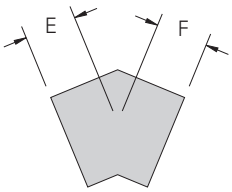

Notes: Dimensions are in inches. Millimeters shown are for reference only. Data subject to change without notice.

Lay-In Wireway
Type 1 Quick-Connect Hinge Cover
Illustration Sheet and Catalog Number

Subclass: HSF

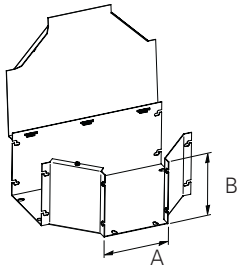

Tee
Side hinge cover design for applications where a "T" junction is necessary.

Catalog Number	Tee A in.	Tee A mm	Tee B in.	Tee B mm	Tee E in.	Tee E mm	Tee F in.	Tee F mm
22 HST	2.50	63	2.50	63	5.38	136	4.25	198
44 HST	4.00	102	4.00	102	6.15	156	6.12	155
66 HST	6.00	152	6.00	152	7.15	181	7.12	181
88 HST	8.00	203	8.00	203	8.15	207	8.12	206
1010 HST	10.00	254	10.00	254	9.15	232	9.12	231
1212 HST	12.00	305	12.00	305	10.15	258	10.12	257

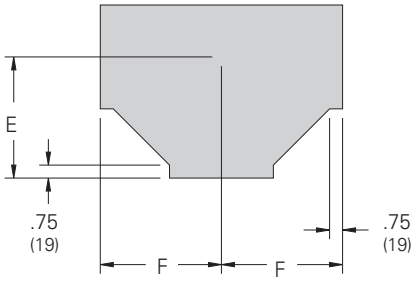

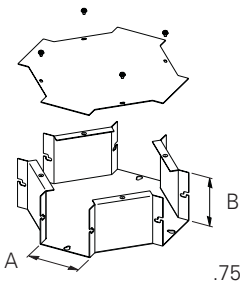

Cross
Side cover and broad body design to junction cable run in four directions. Removable cover is secured with screws.

Catalog Number	Cross A in.	Cross A mm	Cross B in.	Cross B mm	Cross E in.	Cross E mm	Cross F in.	Cross F mm
22 HSX	2.50	63	2.50	63	5.97	151	5.97	151
44 HSX	4.00	102	4.00	102	6.75	171	6.75	171
66 HSX	6.00	152	6.00	152	7.75	197	7.75	197
88 HSX	8.00	203	8.00	203	8.75	222	8.75	222
1010 HSX	10.00	254	10.00	254	9.75	247	9.75	247
1212 HSX	12.00	305	12.00	305	10.75	273	10.75	273

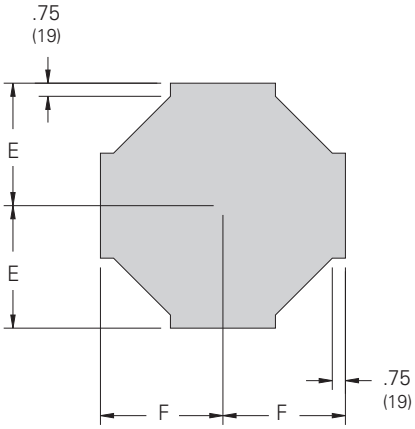

Notes: Dimensions are in inches. Millimeters shown are for reference only. Data subject to change without notice.

Lay-In Wireway
Type 3R EnviroShield™ System
Data Sheet

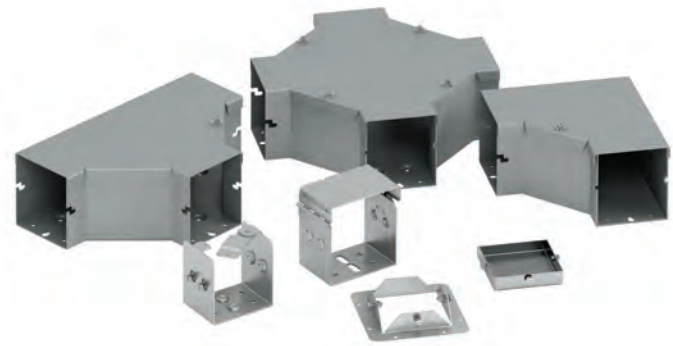

Install inside connector in wireway ends and tighten

Install and secure hinged covers

Install outside connector around wireway splice location

Latch shut (padlock can be installed if desired)

Application
- Houses runs of power, control and communication cable
- Used for cable and wire junction, distribution and termination

Standards
- UL 870 listed, Type 3R
- CSA C22.2 No. 26 certified, Type 3R
- Conforms to NEMA standard for Type 3R

Material & Finish
- Galvanealed steel with ANSI 61 gray acrylic electrocoat finish and zinc plated hardware
- Aluminum with stainless steel hardware

Accessories
- Sealing devices
- Touch-up paint
- See Accessories section

Protected by U.S. Patents 7,525,044 & 7,762,042

Construction
- Wireway body and cover are fabricated from code gauge steel, or brushed aluminum (see page 22)
- Wireway body has embossed mounting holes on the back
- Cover is secured to the body with gasketed retaining screw
- Variety of fittings allow runs which can change directions, size, junction and terminate, as well as, expansion and contraction
- Wireway connectors (sold separately) have a gate feature which can swing completely open allowing for lay-in of wire and cable
- Wireway connectors have a locking feature for optional pad-locking
- Removable hinge cover construction
- Z-slots for quick-connect connection method
- Wireways 120" (3048mm) in length have two overlapping covers

Discount Schedule: A2

Subclass: RHS

Notes: We can provide special sizes, finishes and other modifications. Consult the factory for your special requirements.

Lay-In Wireway
Type 3R EnviroShield™ System
Illustration Sheet and Catalog Number

Subclass: RHS

Wireway Section
Lengths from 12.00″ to 120.00″.
Wireway exceeding 72.00″ has two covers.

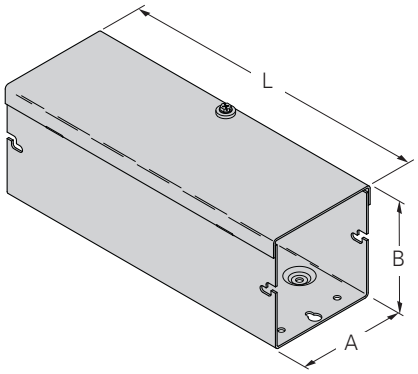

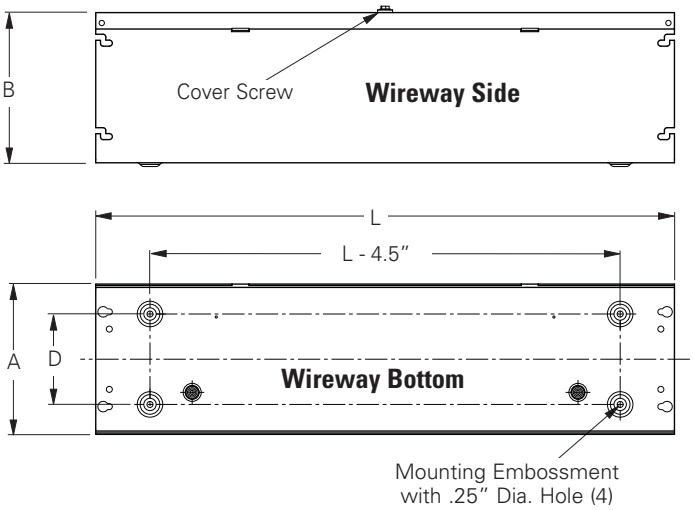

Wireway Catalog Number Steel	Wireway Catalog Number Aluminum	Wireway Size Height x Depth x Length A x B x C in.	Wireway Size Height x Depth x Length A x B x C mm	Mounting Hole Spacing D in.	Mounting Hole Spacing D mm	Material Thickness Steel Gauge	Material Thickness Steel mm	Material Thickness Aluminum In.	Material Thickness Aluminum mm
4412-3RHS NK	4412-3RAHS NK	4.00 x 4.00 x 12.00	101 x 101 x 305	2.25	57.1	16	1.52	0.080	2.03
4460-3RHS NK	4460-3RAHS NK	4.00 x 4.00 x 60.00	101 x 101 x 1524	2.25	57.1	16	1.52	0.080	2.03
44120-3RHS NK	44120-3RAHS NK	4.00 x 4.00 x 120.00	101 x 101 x 3048	2.25	57.1	16	1.52	0.080	2.03
6612-3RHS NK	6612-3RAHS NK	6.00 x 6.00 x 12.00	152 x 152 x 305	3.75	95.2	16	1.52	0.080	2.03
6660-3RHS NK	6660-3RAHS NK	6.00 x 6.00 x 60.00	152 x 152 x 1524	3.75	95.2	16	1.52	0.080	2.03
66120-3RHS NK	66120-3RAHS NK	6.00 x 6.00 x 120.00	152 x 152 x 3048	3.75	95.2	16	1.52	0.080	2.03
8812-3RHS NK	8812-3RAHS NK	8.00 x 8.00 x 12.00	203 x 203 x 305	5.75	146.0	16	1.52	0.080	2.03
8860-3RHS NK	8860-3RAHS NK	8.00 x 8.00 x 60.00	203 x 203 x 1524	5.75	146.0	16	1.52	0.080	2.03
88120-3RHS NK	88120-3RAHS NK	8.00 x 8.00 x 120.00	203 x 203 x 3048	5.75	146.0	16	1.52	0.080	2.03

NK = No Knockouts

Wireway Connectors
Swing gate allows for lay-in installation of wire and cable.
Wrap-around connector provides Type 3R rating and padlocking provision.

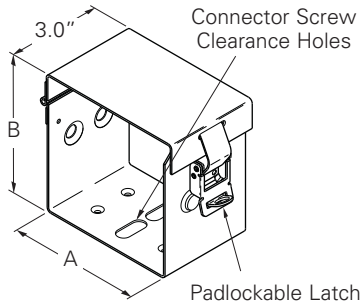

Connector Catalog Number Steel	Connector Catalog Number Aluminum	A in.	A mm	B in.	B mm
44-3RHSC	44-3RAHSC	4.00	101	4.00	101
66-3RHSC	66-3RAHSC	6.00	152	6.00	152
88-3RHSC	88-3RAHSC	8.00	203	8.00	203

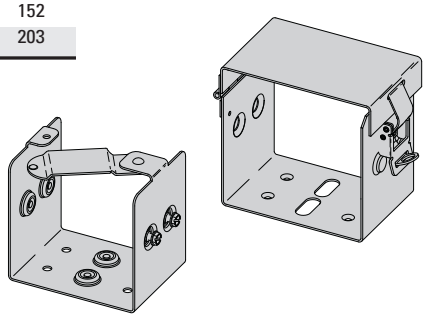

Notes: Dimensions are in inches. Millimeters shown are for reference only. Data subject to change without notice.

Lay-In Wireway
Type 3R EnviroShield™ System
Illustration Sheet and Catalog Number

Subclass: RHS

Wireway End
Used to terminate wireway or fitting.

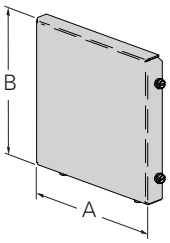

Wireway End Catalog Number Steel	Aluminum	A in.	A mm	B in.	B mm
44-3RHSE NK	44-3RAHSE NK	4.00	101	4.00	101
66-3RHSE NK	66-3RAHSE NK	6.00	152	6.00	152
88-3RHSE NK	88-3RAHSE NK	8.00	203	8.00	203

Wireway End Flange
Allows for a secure connection of wireway or fitting to an adjoining enclosure or wall.

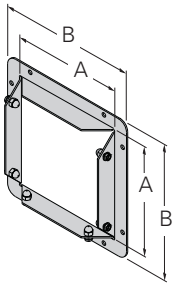

Wireway End Flange Catalog Number Steel	Aluminum	A in.	A mm	B in.	B mm
44-3RHSF	44-3RAHSF	4.00	101	4.00	101
66-3RHSF	66-3RAHSF	6.00	152	6.00	152
88-3RHSF	88-3RAHSF	8.00	203	8.00	203

Wireway 90° Elbow
Side opening hinge cover design for applications where 90° turn is necessary.

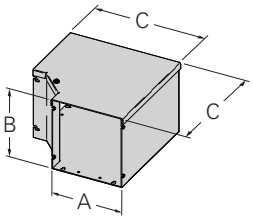

Wireway 90° Elbow Catalog Number Steel	Aluminum	A in.	A mm	B in.	B mm	C in.	C mm
44-3RHSL SIDE	44-3RAHSL SIDE	4.00	101	4.00	101	8.84	224
66-3RHSL SIDE	66-3RAHSL SIDE	6.00	152	6.00	152	10.84	275
88-3RHSL SIDE	88-3RAHSL SIDE	8.00	203	8.00	203	12.84	326

Wireway Tee
Side opening hinge cover design for applications where a tee junction is necessary.

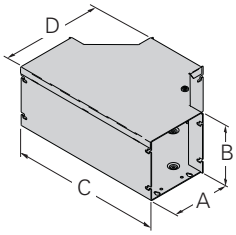

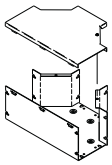

Wireway Tee Catalog Number Steel	Aluminum	A in.	A mm	B in.	B mm	C in.	C mm	D in.	D mm
44-3RHST	44-3RAHST	4.00	101	4.00	101	13.84	351	9.04	229
66-3RHST	66-3RAHST	6.00	152	6.00	152	15.84	402	11.04	280
88-3RHST	88-3RAHST	8.00	203	8.00	203	17.84	453	13.04	331

Notes: Dimensions are in inches. Millimeters shown are for reference only. Data subject to change without notice.

Lay-In Wireway
Type 3R EnviroShield™ System
Illustration Sheet and Catalog Number

Subclass: RHS

Wireway Cross
Side opening cover design for applications where a cross junction is necessary.

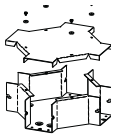

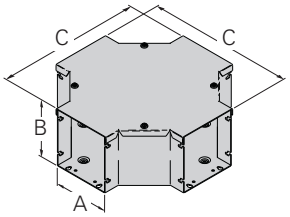

Wireway Cross Catalog Number Steel	Aluminum	A in.	A mm	B in.	B mm	C in.	C mm
44-3RSCX	44-3RASCX	4.00	101	4.00	101	13.84	351
66-3RSCX	66-3RASCX	6.00	152	6.00	152	15.84	402
88-3RSCX	88-3RASCX	8.00	203	8.00	203	17.84	453

Wireway Reducer
Screw opening cover design for applications where a change in wireway cross-section (height x width) is necessary.

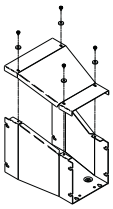

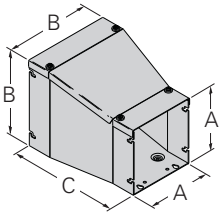

Wireway Reducer Catalog Number Steel	Aluminum	A in.	A mm	B in.	B mm	C in.	C mm
4466-3RSCR	4466-3RASCR	4.00	101	6.00	152	10.00	254
4488-3RSCR	4488-3RASCR	4.00	101	8.00	203	10.00	254
6688-3RSCR	6688-3RASCR	6.00	152	8.00	203	10.00	254

Bolt-On Barrier
For installations that require separated wiring compartments. An ideal solution for separating power from communication cables.
* Not UL or CSA listed fitting

Wireway Catalog Number Steel	Aluminum	Wireway Size Height x Depth A x B in.	mm	Length L in.	mm	Height H in.	mm
44-12BK*	44-3RBKA*	4.00 x 4.00	101 x 101	60.00	1524	3.00	76.2
66-12BK*	66-3RBKA*	6.00 x 6.00	152 x 152	60.00	1524	4.50	114.3
88-12BK*	88-3RBKA*	8.00 x 8.00	203 x 203	60.00	1524	6.00	152.4

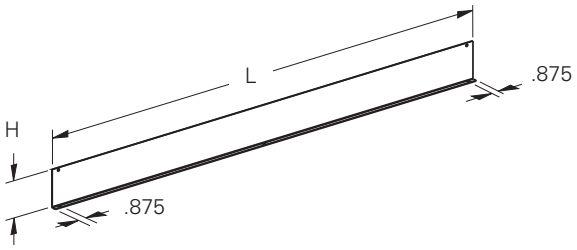

Notes: Dimensions are in inches. Millimeters shown are for reference only. Data subject to change without notice.

Lay-In Wireway
Type 12
Data Sheet

Application
- Houses runs of control and power cable
- Protects against circulating dust, falling dirt and dripping noncorrosive liquids

Standards
- UL 870 listed, unless noted
- CSA C22.2 No. 26 certified, unless noted
- Conforms to NEMA standard for Type 12

Finish
- Wash and phosphate undercoat
- ANSI 61 gray painted finish
- Hardware and latches are zinc plated

Accessories
- Touch-up paint
- See Accessories section

Construction
- Wireway body and cover are fabricated from (14) gauge steel
- Flanges are (10) gauge steel
- All continuous welded seams are finished smooth
- External and internal edges are rounded to prevent injury or damage to cable
- Covers are secured to the wireway and fitting body with heavy duty butt hinges and quick-release latches
- Covers have a fixed, oil-resistant gasket
- An oil-resistant gasket is provided for installation between flanges
- All covers and sealing plates can be hinged completely open or removed to allow for continuous lay-in cable feed
- All straight sections and fittings are furnished with sealing plate kits (see pages 26-30)

Discount Schedule: C2

Subclass: D90

Notes: We can provide special sizes, finishes and other modifications. Consult the factory for your special requirements.

Lay-In Wireway
Type 12
Illustration Sheet

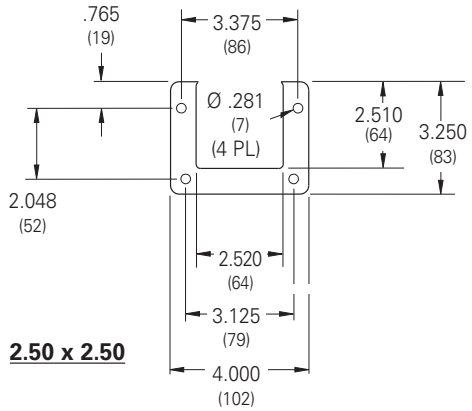

2.50 x 2.50

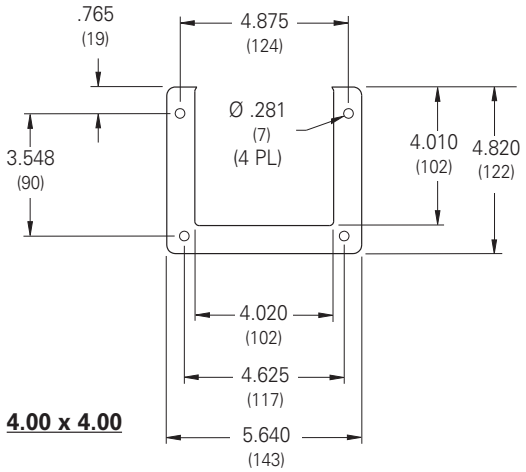

4.00 x 4.00

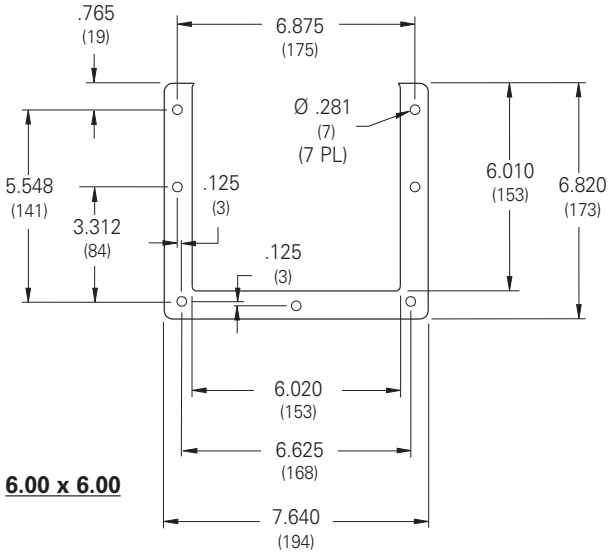

6.00 x 6.00

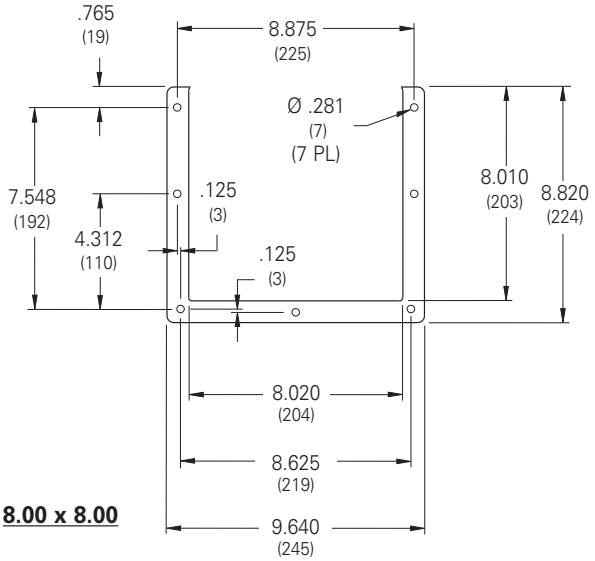

8.00 x 8.00

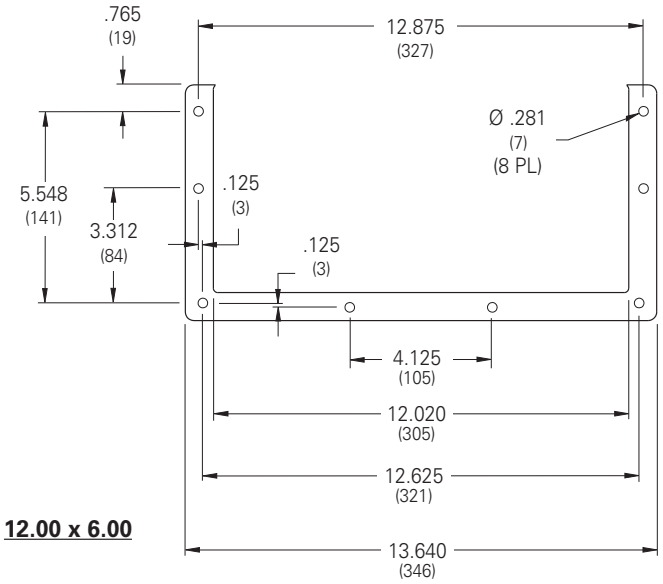

12.00 x 6.00

Flange Details

Notes: Dimensions are in inches. Millimeters shown are for reference only. Data subject to change without notice.

Lay-In Wireway
Type 12
Illustration Sheet and Catalog Number

Subclass: D90

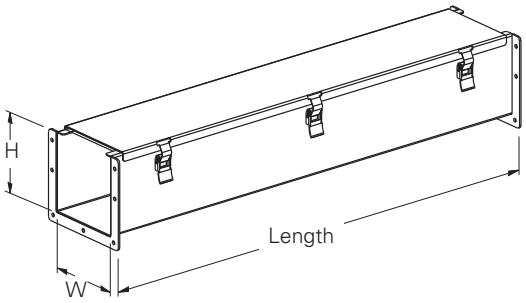

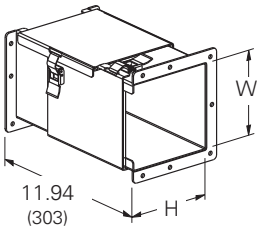

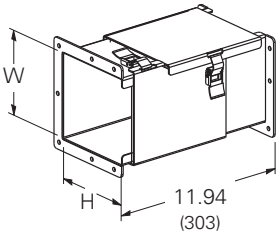

Straight Section
- Includes (1) sealing plate kit

Catalog Number	Size	H in.	H mm	W in.	W mm
22(*)-12LW	2.5 x 2.5	2.50	64	2.50	64
44(*)-12LW	4 x 4	4.00	102	4.00	102
66(*)-12LW	6 x 6	6.00	152	6.00	152
88(*)-12LW	8 x 8	8.00	203	8.00	203
126(*)-12LW	12 x 6	6.00	152	12.00	305

(*) Insert for length **04** = 4″, **06** = 6″, **12** = 12″, **24** = 24″, **36** = 36″, **48** = 48″, **60** = 60″, **120** = 120″.

Actual Length For	in.	mm
4	3.94	100
6	5.94	151
12	11.94	303
24	23.94	608
36	35.94	913
48	47.94	1218
60	59.94	1522
120	119.94	3046

Transposition Wireway Sections

Clockwise (C)
- Includes (1) sealing plate kit

Counterclockwise (CC)
- Includes (1) sealing plate kit

Catalog Number	Size	H in.	H mm	W in.	W mm
22-12LTS(*)	2.5 x 2.5	2.50	64	2.50	64
44-12LTS(*)	4 x 4	4.00	102	4.00	102
66-12LTS(*)	6 x 6	6.00	152	6.00	152
88-12LTS(*)	8 x 8	8.00	203	8.00	203

(*) Insert **C** for Clockwise
Insert **CC** for Counterclockwise

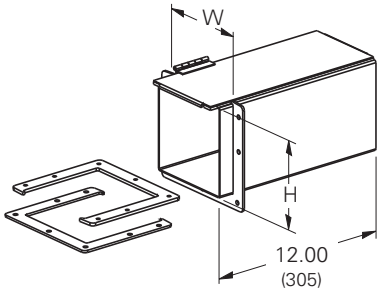

Telescopic Fitting, Lay-In
- Adjustable length from 1″ to 7″
- Includes hardware
- No cutting or welding required

Catalog Number	Size	H in.	H mm	W in.	W mm
22-12LTF	2.5 x 2.5	2.32	59	2.32	59
44-12LTF	4 x 4	3.82	97	3.82	97
66-12LTF	6 x 6	5.82	148	5.82	148
88-12LTF	8 x 8	7.82	199	7.82	199
126-12LTF	12 x 6	5.82	148	11.82	300

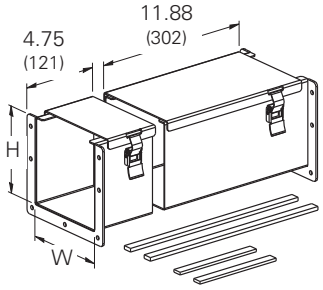

Cut-Off Fitting, Lay-In
- Includes (1) sealing plate kit
- Shorten body and cover to desired length and weld together, 9.50″ minimum length

Catalog Number	Size	H in.	H mm	W in.	W mm
22-12LCF	2.5 x 2.5	2.50	64	2.50	64
44-12LCF	4 x 4	4.00	102	4.00	102
66-12LCF	6 x 6	6.00	152	6.00	152
88-12LCF	8 x 8	8.00	203	8.00	203
126-12LCF	12 x 6	6.00	152	12.00	305

Notes: Dimensions are in inches. Millimeters shown are for reference only. Data subject to change without notice.

Lay-In Wireway
Type 12
Illustration Sheet and Catalog Number

Subclass: D90

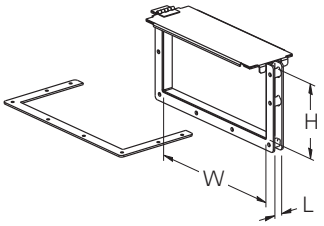

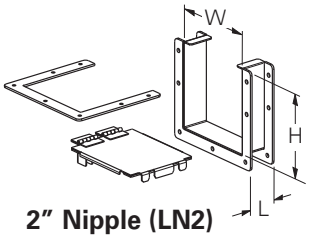

1″ Nipple (LN1)
• Includes hardware

2″ Nipple (LN2)
3″ Nipple (LN3)
• Includes hardware

Catalog Number	Size	H		W	
		in.	mm	in.	mm
22-12LN(*)	2.5 x 2.5	2.50	64	2.50	64
44-12LN(*)	4 x 4	4.00	102	4.00	102
66-12LN(*)	6 x 6	6.00	152	6.00	152
88-12LN(*)	8 x 8	8.00	203	8.00	203
126-12LN(*)	12 x 6	6.00	152	12.00	305

(*) Insert **1** for 1″ nipple (L=.938″)
Insert **2** for 2″ nipple (L=1.938″)
Insert **3** for 3″ nipple (L=2.938″)

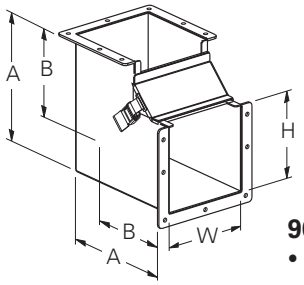

90˚ Elbow, Inside Opening
• Includes (1) sealing plate kit

Catalog Number	Size	H		W		A		B	
		in.	mm	in.	mm	in.	mm	in.	mm
22-12LE9B	2.5 x 2.5	2.50	64	2.50	64	5.94	151	4.69	119
44-12LE9B	4 x 4	4.00	102	4.00	102	7.44	189	5.44	138
66-12LE9B	6 x 6	6.00	152	6.00	152	9.44	240	6.44	164
88-12LE9B	8 x 8	8.00	203	8.00	203	11.44	291	7.44	189
126-12LE9B	12 x 6	6.00	152	12.00	305	9.44	240	6.44	164

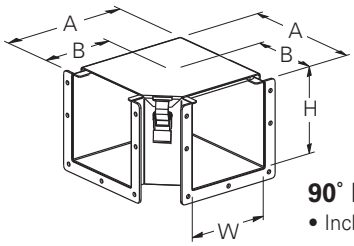

90˚ Elbow, Top Opening
• Includes (1) sealing plate kit

Catalog Number	Size	H		W		A		B	
		in.	mm	in.	mm	in.	mm	in.	mm
22-12LE9A	2.5 x 2.5	2.50	64	2.50	64	5.25	133	4.00	102
44-12LE9A	4 x 4	4.00	102	4.00	102	6.75	171	4.75	121
66-12LE9A	6 x 6	6.00	152	6.00	152	8.75	222	5.75	146
88-12LE9A	8 x 8	8.00	203	8.00	203	10.75	273	6.75	171
126-12LE9A	12 x 6	6.00	152	12.00	305	14.75	375	8.75	222

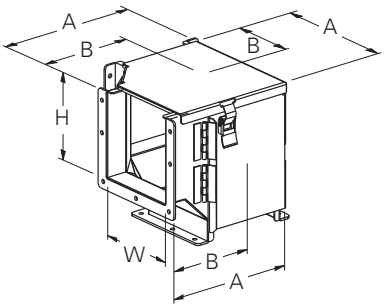

90˚ Elbow, Outside-Top Opening
• Includes (2) sealing plate kits

Catalog Number	Size	H		W		A		B	
		in.	mm	in.	mm	in.	mm	in.	mm
22-12LE9AC	2.5 x 2.5	2.50	64	2.50	64	5.94	151	4.69	119
44-12LE9AC	4 x 4	4.00	102	4.00	102	7.44	189	5.44	138
66-12LE9AC	6 x 6	6.00	152	6.00	152	9.44	240	6.44	164
88-12LE9AC	8 x 8	8.00	203	8.00	203	11.44	291	7.44	189

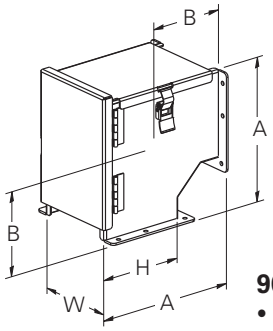

90˚ Elbow, Outside Opening
• Includes (1) sealing plate kit

Catalog Number	Size	H		W		A		B	
		in.	mm	in.	mm	in.	mm	in.	mm
22-12LE9C	2.5 x 2.5	2.50	64	2.50	64	5.94	151	4.69	119
44-12LE9C	4 x 4	4.00	102	4.00	102	7.44	189	5.44	138
66-12LE9C	6 x 6	6.00	152	6.00	152	9.44	240	6.44	164
88-12LE9C	8 x 8	8.00	203	8.00	203	11.44	291	7.44	189
126-12LE9C	12 x 6	6.00	152	12.00	305	9.44	240	6.44	164

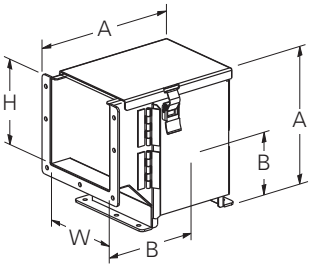

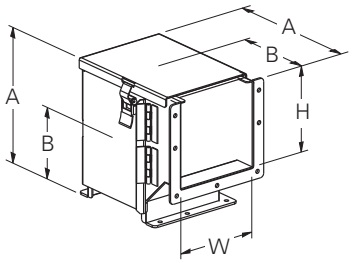

90˚ Transposition Elbows

Clockwise (C)
• Includes (1) sealing plate kit

Counterclockwise (CC)
• Includes (1) sealing plate kit

Catalog Number	Size	H		W		A		B	
		in.	mm	in.	mm	in.	mm	in.	mm
22-12LE9T(*)	2.5 x 2.5	2.50	64	2.50	64	5.94	151	4.69	119
44-12LE9T(*)	4 x 4	4.00	102	4.00	102	7.44	189	5.44	138
66-12LE9T(*)	6 x 6	6.00	152	6.00	152	9.44	240	6.44	164
88-12LE9T(*)	8 x 8	8.00	203	8.00	203	11.44	291	7.44	189

(*) Insert **C** for Clockwise, Insert **CC** for Counterclockwise

Notes: Dimensions are in inches. Millimeters shown are for reference only. Data subject to change without notice.

Lay-In Wireway
Type 12
Illustration Sheet and Catalog Number

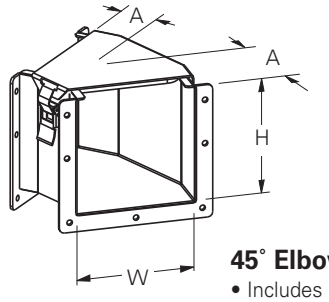

45˚ Elbow, Top Opening
• Includes (1) sealing plate kit

Catalog Number	Size	H		W		A	
		in.	mm	in.	mm	in.	mm
22-12LE45A	2.5 x 2.5	2.50	64	2.50	64	3.12	79
44-12LE45A	4 x 4	4.00	102	4.00	102	3.70	94
66-12LE45A	6 x 6	6.00	152	6.00	152	4.46	113
88-12LE45A	8 x 8	8.00	203	8.00	203	5.23	133
126-12LE45A	12 x 6	6.00	152	12.00	305	6.76	172

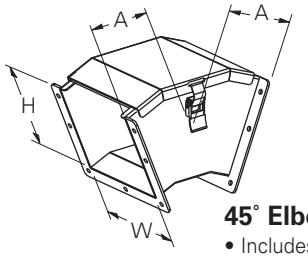

45˚ Elbow, Outside Opening
• Includes (1) sealing plate kit

Catalog Number	Size	H		W		A	
		in.	mm	in.	mm	in.	mm
22-12LE45C	2.5 x 2.5	2.50	64	2.50	64	2.65	67
44-12LE45C	4 x 4	4.00	102	4.00	102	3.51	89
66-12LE45C	6 x 6	6.00	152	6.00	152	3.91	99
88-12LE45C	8 x 8	8.00	203	8.00	203	4.24	108
126-12LE45C	12 x 6	6.00	152	12.00	305	3.91	89

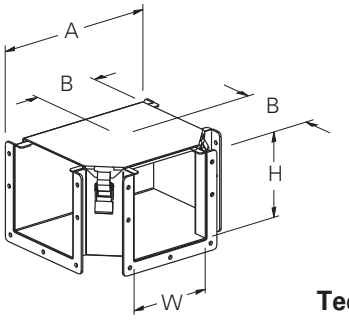

Tee, Top Opening
• Includes (2) sealing plate kits

Catalog Number	Size	H		W		A		B	
		in.	mm	in.	mm	in.	mm	in.	mm
22-12LTA	2.5 x 2.5	2.50	64	2.50	64	8.00	203	4.00	102
44-12LTA	4 x 4	4.00	102	4.00	102	9.50	241	4.75	121
66-12LTA	6 x 6	6.00	152	6.00	152	11.50	292	5.75	146
88-12LTA	8 x 8	8.00	203	8.00	203	13.50	343	6.75	171
126-12LTA	12 x 6	6.00	152	12.00	305	17.50	445	8.75	222

Subclass: D90

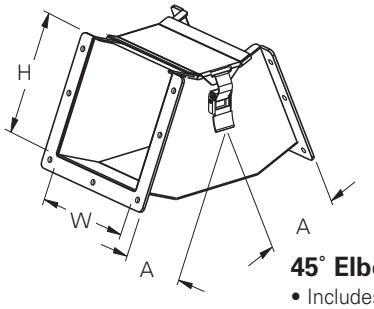

45˚ Elbow, Inside Opening
• Includes (1) sealing plate kit

Catalog Number	Size	H		W		A	
		in.	mm	in.	mm	in.	mm
22-12LE45B	2.5 x 2.5	2.50	64	2.50	64	3.70	94
44-12LE45B	4 x 4	4.00	102	4.00	102	4.28	109
66-12LE45B	6 x 6	6.00	152	6.00	152	5.04	128
88-12LE45B	8 x 8	8.00	203	8.00	203	5.81	148
126-12LE45B	12 x 6	6.00	152	12.00	305	5.04	128

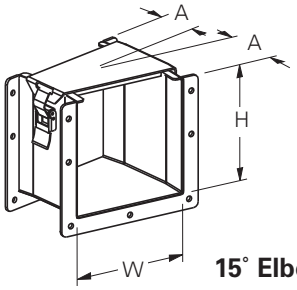

15˚ Elbow, Top Opening
• Includes (1) sealing plate kit

Catalog Number	Size	H		W		A	
		in.	mm	in.	mm	in.	mm
22-12LE15A	2.5 x 2.5	2.50	64	2.50	64	2.57	65
44-12LE15A	4 x 4	4.00	102	4.00	102	2.77	70
66-12LE15A	6 x 6	6.00	152	6.00	152	3.03	77
88-12LE15A	8 x 8	8.00	203	8.00	203	3.29	84
126-12LE15A	12 x 6	6.00	152	12.00	305	3.81	97

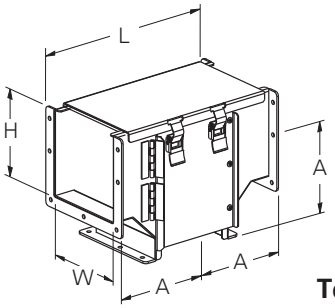

Tee, Outside Opening
• Includes (2) sealing plate kits

Catalog Number	Size	H		W		A		L	
		in.	mm	in.	mm	in.	mm	in.	mm
22-12LTC	2.5 x 2.5	2.50	64	2.50	64	4.69	119	9.38	238
44-12LTC	4 x 4	4.00	102	4.00	102	5.44	138	10.88	264
66-12LTC	6 x 6	6.00	152	6.00	152	6.44	164	12.88	314
88-12LTC	8 x 8	8.00	203	8.00	203	7.44	189	14.88	365

Notes: Dimensions are in inches. Millimeters shown are for reference only. Data subject to change without notice.

Lay-In Wireway
Type 12
Illustration Sheet and Catalog Number

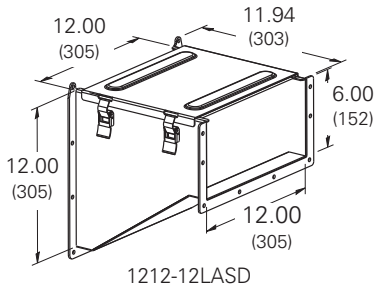

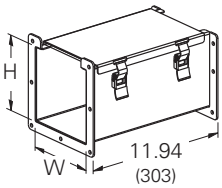

Adapters
• Includes (2) sealing plate kits

Catalog Number	Size	Competitor	H in.	H mm	W in.	W mm
22-12LAHW	2.5 x 2.5	Hoffman®† or Wiegmann® †	2.50	64	2.50	64
44-12LAHW	4 x 4		4.00	102	4.00	102
66-12LAHW	6 x 6		6.00	152	6.00	152
88-12LAHW	8 x 8		8.00	203	8.00	203
126-12LAHW	12 x 6		6.00	152	12.00	305
22-12LASD	2.5 x 2.5	Square D®†	2.50	64	2.50	64
44-12LASD	4 x 4		4.00	102	4.00	102
66-12LASD	6 x 6		6.00	152	6.00	152
88-12LASD	8 x 8		8.00	203	8.00	203
126-12LASD	12 x 6		6.00	152	12.00	305
22-12LAHM	2.5 x 2.5	Hammond Mfg.™†	2.50	64	2.50	64
44-12LAHM	4 x 4		4.00	102	4.00	102
66-12LAHM	6 x 6		6.00	152	6.00	152
88-12LAHM	8 x 8		8.00	203	8.00	203
126-12LAHM	12 x 6		6.00	152	12.00	305

† Marks are the property of their respective owners.

Subclass: D90

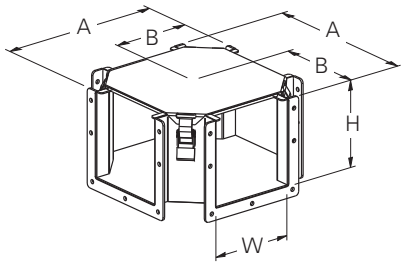

Cross, Top Opening
• Includes (3) sealing plate kits

Catalog Number	Size	H in.	H mm	W in.	W mm	A in.	A mm	B in.	B mm
22-12LC	2.5 x 2.5	2.50	64	2.50	64	8.00	203	4.00	102
44-12LC	4 x 4	4.00	102	4.00	102	9.50	241	4.75	121
66-12LC	6 x 6	6.00	152	6.00	152	11.50	292	5.75	146
88-12LC	8 x 8	8.00	203	8.00	203	13.50	343	6.75	171
126-12LC	12 x 6	6.00	152	12.00	152	17.50	445	8.75	222

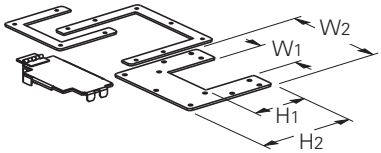

Reducer
• Includes hardware

Catalog Number	Size	H1 in.	H1 mm	H2 in.	H2 mm	W1 in.	W1 mm	W2 in.	W2 mm
4422-12LR	4 x 4 to 2.5 x 2.5	2.44	62	4.82	122	2.38	60	5.64	143
6644-12LR	6 x 6 to 4 x 4	3.94	100	6.82	173	3.88	99	7.64	194
8866-12LR	8 x 8 to 6 x 6	5.94	151	8.82	224	5.88	149	9.64	245
12644-12LR	12 x 6 to 4 x 4	3.94	100	6.82	173	3.88	99	13.64	346
12666-12LR	12 x 6 to 6 x 6	5.94	151	6.82	173	5.88	149	13.64	346

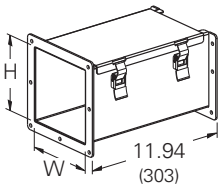

Lay-In to Feed Through Adapter
• Includes (1) sealing plate kit and (1) gasket kit

Catalog Number	Size	H in.	H mm	W in.	W mm
44-12LAFW	4 x 4	4.00	102	4.00	102
66-12LAFW	6 x 6	6.00	152	6.00	152
88-12LAFW	8 x 8	8.00	203	8.00	203

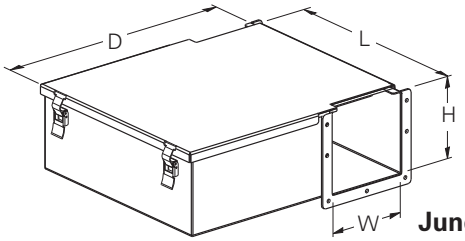

Junction Box
• Includes (1) junction box sealing plate kit and (1) of the following removable panels:
22-12LJB = AW108P
44-12LJB = AW1210P
66-12LJB = AW1412P
88-12LJB = AW1614P

Catalog Number	Size	H in.	H mm	W in.	W mm	L in.	L mm	D in.	D mm
22-12LJB	2.5 x 2.5	2.50	64	2.50	64	11.59	294	10.25	260
44-12LJB	4 x 4	4.00	102	4.00	102	13.59	345	14.00	356
66-12LJB	6 x 6	6.00	152	6.00	152	15.59	396	18.00	457
88-12LJB	8 x 8	8.00	203	8.00	203	17.59	447	22.00	559

Notes: Dimensions are in inches. Millimeters shown are for reference only. Data subject to change without notice.

Lay-In Wireway
Type 12
Illustration Sheet and Catalog Number

Subclass: D90

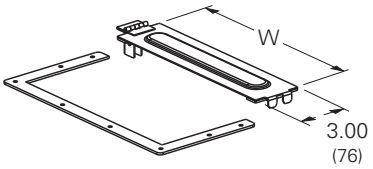

Sealing Plate, Flat
• Includes hardware

Catalog Number	Size	W in.	W mm
22-12LSP	2.5 x 2.5	2.50	64
44-12LSP	4 x 4	4.00	102
66-12LSP	6 x 6	6.00	152
88-12LSP	8 x 8	8.00	203
126-12LSP	12 x 6	12.00	305

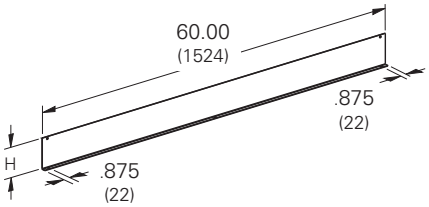

Barrier, Bolt-On
• Includes hardware

Catalog Number	Size	H in.	H mm
22-12BK	2.5 x 2.5	1.88	48
44-12BK	4 x 4	3.00	76
66-12BK	6 x 6	4.50	114
88-12BK	8 x 8	6.00	152
66-12BK	12 x 6	4.50	114

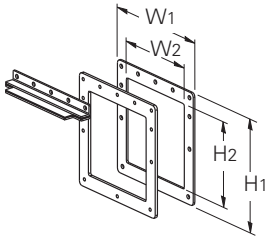

Box Connector
• Includes hardware

Catalog Number	Size	H1 in.	H1 mm	H2 in.	H2 mm	W1 in.	W1 mm	W2 in.	W2 mm
22-12LBC	2.5 x 2.5	4.10	104	2.35	60	4.10	104	2.35	60
44-12LBC	4 x 4	5.74	146	3.85	72	5.74	146	3.85	72
66-12LBC	6 x 6	7.74	197	5.85	123	7.74	197	5.85	123
88-12LBC	8 x 8	9.74	247	7.85	174	9.74	247	7.85	174
126-12LBC	12 x 6	7.74	197	5.85	123	13.74	197	11.85	301

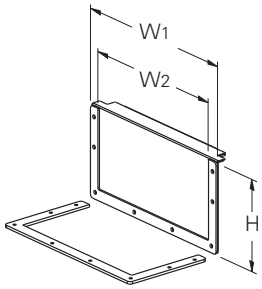

Closure Plate
• Includes hardware

Catalog Number	Size	H in.	H mm	W1 in.	W1 mm	W2 in.	W2 mm
22-12LCP	2.5 x 2.5	2.50	64	4.00	102	2.50	64
44-12LCP	4 x 4	4.00	102	5.64	143	4.00	102
66-12LCP	6 x 6	6.00	152	7.64	194	6.00	152
88-12LCP	8 x 8	8.00	203	9.64	245	8.00	203
126-12LCP	12 x 6	6.00	152	13.64	346	12.00	305

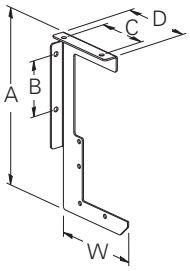

Drop

Catalog Number	Size	W in.	W mm	A in.	A mm	B in.	B mm	C in.	C mm	D in.	D mm
22-12LDH	2.5 x 2.5	4.50	114	8.75	222	1.50	38	1.50	38	3.50	89
44-12LDH	4 x 4	6.00	152	11.75	298	3.00	76	3.00	76	5.00	127
66-12LDH	6 x 6	8.50	216	16.00	406	5.00	127	5.00	127	7.00	178
88-12LDH	8 x 8	10.50	267	20.00	508	7.00	178	7.00	178	9.00	229

Wireway Hangers
• Includes wireway to bracket mounting hardware
• Anchors not included

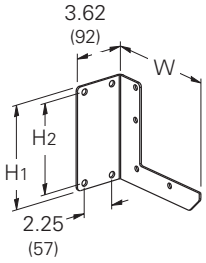

Bracket

Catalog Number	Size	H1 in.	H1 mm	H2 in.	H2 mm	W in.	W mm
22-12LBH	2.5 x 2.5	3.38	86	2.50	64	4.38	111
44-12LBH	4 x 4	4.88	124	4.00	102	5.88	149
66-12LBH	6 x 6	7.13	181	6.25	159	8.13	207
88-12LBH	8 x 8	9.13	232	8.25	210	10.13	257

Notes: Dimensions are in inches. Millimeters shown are for reference only. Data subject to change without notice.

Feed-Through Wireway
Type 12
Data Sheet

Application
- Houses runs of control and power cable
- Protects against circulating dust, falling dirt and dripping noncorrosive liquids

Standards
- UL 870 listed, unless noted
- CSA C22.2 No. 26 certified, unless noted
- Conforms to NEMA standard for Type 12

Finish
- Wash and phosphate undercoat
- ANSI 61 gray painted finish
- Hardware and latches are zinc plated

Accessories
- Touch-up paint
- See Accessories section

Construction
- Wireway body and cover are fabricated from (14) gauge steel
- Flanges are (10) gauge steel
- All continuous welded seams are finished smooth
- External and internal edges are rounded to prevent injury or damage to cable
- Covers are secured to the wireway body with heavy-duty hinges on one side and easy-to-operate screw clamps mounted to the opposite side
- Continuous flanged ends assure rigid connections of wireway and fittings
- Covers have a seamless poured in-place gasket
- An oil-resistant gasket is provided for installation between flanges

Discount Schedule: C2

Subclass: DA0

Notes: We can provide special sizes, finishes and other modifications. Consult the factory for your special requirements.

Feed-Through Wireway
Type 12
Illustration Sheet and Catalog Number

Subclass: DA0

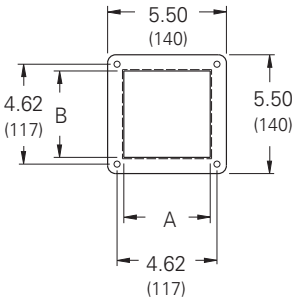

4.00 x 4.00

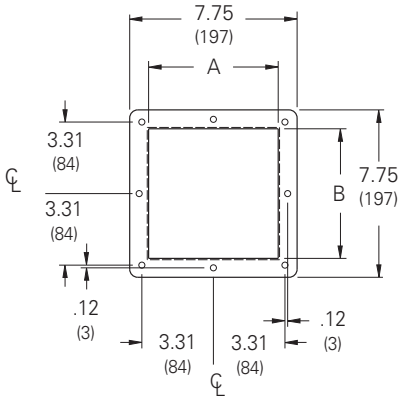

6.00 x 6.00

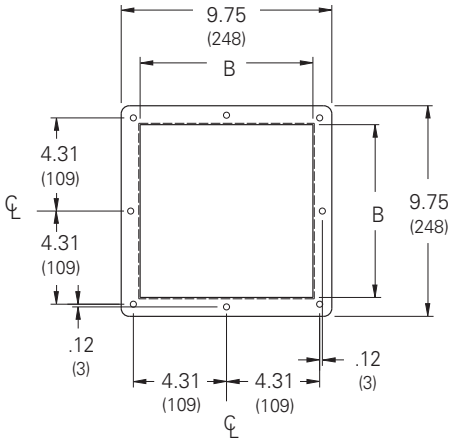

8.00 x 8.00

Flange Detail

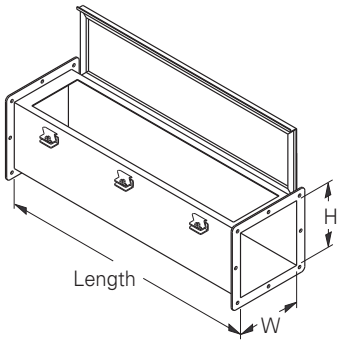

Wireway Section

- Lengths from 12.00″ (305 mm) to 120.00″ (3048 mm)

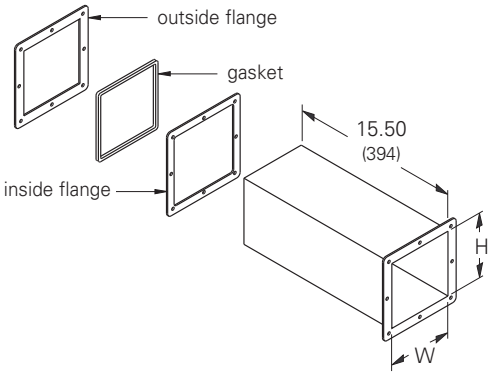

Straight Section

- Includes (1) gasket kit

Catalog Number	Size	H		W	
		in.	mm	in.	mm
44(*)-12FW	4 x 4	4.00	102	4.00	102
66(*)-12FW	6 x 6	6.00	152	6.00	152
88(*)-12FW	8 x 8	8.00	203	8.00	203

(*) Insert for length **12** = 12″, **24** = 24″, **36** = 36″, **48** = 48″, **60** = 60″, **120** = 120″.

Actual Length		
For	in.	mm
12	11.94	303
24	23.94	608
36	35.94	913
48	47.94	1218
60	59.94	1522
120	119.94	3046

Telescopic Fitting

- Adjustable lengths from 1.50″ (38 mm) to 13.50″ (343 mm)
- No cutting or welding required

Catalog Number	Size	H		W	
		in.	mm	in.	mm
44-12FTF *	4 x 4	3.82	97	3.82	97
66-12FTF *	6 x 6	5.82	148	5.82	148
88-12FTF *	8 x 8	7.82	199	7.82	199

* Not UL or CSA Listed fitting.

Notes: Dimensions are in inches. Millimeters shown are for reference only. Data subject to change without notice.

Feed-Through Wireway
Type 12
Illustration Sheet and Catalog Number

Subclass: DA0

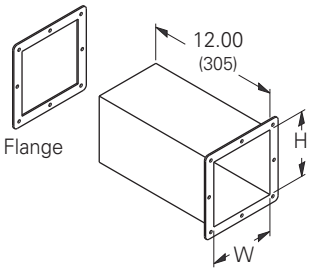

Cut-Off Fitting
- Length up to 12.00" (305 mm)
- Shorten to desired length and weld on flange

Catalog Number	Size	H		W	
		in.	mm	in.	mm
44-12FCF	4 x 4	4.00	102	4.00	102
66-12FCF	6 x 6	6.00	152	6.00	152
88-12FCF	8 x 8	8.00	203	8.00	203

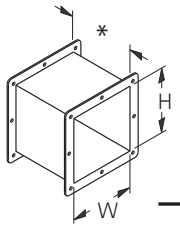

Nipple
* Lengths from 1.00" (25 mm) to 6.00" (152 mm)

Catalog Number	Size	H		W	
		in.	mm	in.	mm
44-12FN(*)	4 x 4	4.00	102	4.00	102
66-12FN(*)	6 x 6	6.00	152	6.00	152
88-12FN(*)	8 x 8	8.00	203	8.00	203

(*) Insert **1** for 1" nipple (L = .938")
Insert **2** for 2" nipple (L = 1.938")
Insert **3** for 3" nipple (L = 2.938")
Insert **6** for 6" nipple (L = 5.938")

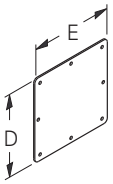

Closure Plate
- Includes hardware

Catalog Number	Size	D		E	
		in.	mm	in.	mm
44-12FCP	4 x 4	5.50	140	5.50	140
66-12FCP	6 x 6	7.75	197	7.75	197
88-12FCP	8 x 8	9.75	248	9.75	248

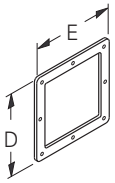

Box Connector
- Includes hardware

Catalog Number	Size	D		E	
		in.	mm	in.	mm
44-12FBC	4 x 4	5.50	140	5.50	140
66-12FBC	6 x 6	7.75	197	7.75	197
88-12FBC	8 x 8	9.75	248	9.75	248

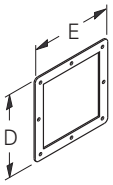

Gasket

Catalog Number	Size	D		E	
		in.	mm	in.	mm
44-12FGK	4 x 4	5.50	140	5.50	140
66-12FGK	6 x 6	7.75	197	7.75	197
88-12FGK	8 x 8	9.75	248	9.75	248

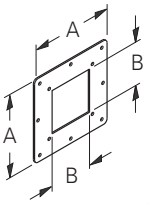

Center

Reducer
- Includes hardware

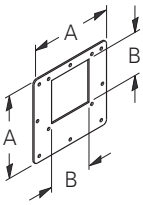

Edge

Catalog Number Center	Catalog Number Edge	Size	A		B	
			in.	mm	in.	mm
6644-12FRC	6644-12FRE	6 to 4	5.50	140	4.00	102
8866-12FRC	8866-12FRE	8 to 6	7.75	197	6.00	152

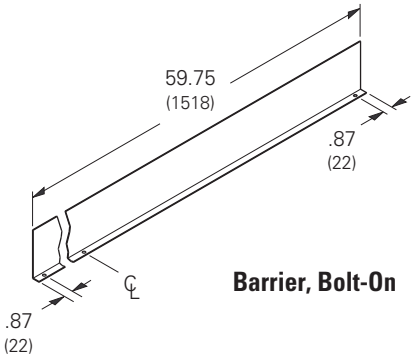

Barrier, Bolt-On

Catalog Number	Size	Height	
		in.	mm
44-12BK	4 x 4	3.00	76
66-12BK	6 x 6	4.50	114
88-12BK	8 x 8	6.00	152

Notes: Dimensions are in inches. Millimeters shown are for reference only. Data subject to change without notice.

Feed-Through Wireway
Type 12
Illustration Sheet and Catalog Number

Subclass: DA0

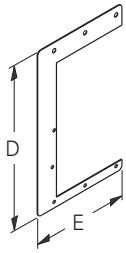

Drop

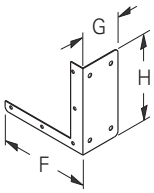

Bracket

Wireway Hangers

- Includes wireway to bracket mounting hardware
- Anchors not included

Catalog Number Drop	Catalog Number Bracket	Size	D in.	D mm	E in.	E mm	F in.	F mm	G in.	G mm	H in.	H mm
44-12DH	44-12BH	4 x 4	12.00	305	6.00	152	6.25	159	3.62	92	6.00	152
66-12DH	66-12BH	6 x 6	16.00	406	8.25	210	8.50	216	3.62	92	8.00	203
88-12DH	88-12BH	8 x 8	20.75	527	20.00	311	10.50	267	3.62	92	11.37	289

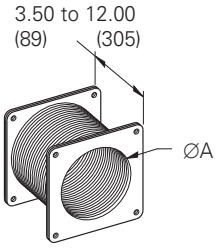

Flexible Fitting

- Isolates wireway from shock or vibration and compensates for misalignment. 90° maximum angle. Hypalon bellow with steel flanges.

Catalog Number	Size	ØA in.	ØA mm
44-12FFF *	4 x 4	4.00	102
66-12FFF *	6 x 6	6.00	152
88-12FFF *	8 x 8	8.00	203

* Not UL or CSA Listed fitting.

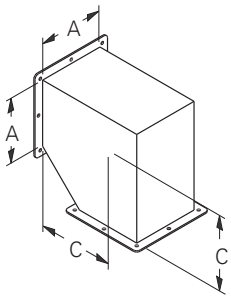

90° Elbow

- Includes (1) gasket & hardware

Catalog Number	Size	A in.	A mm	C in.	C mm
44-12FE9	4 x 4	4.00	102	6.00	152
66-12FE9	6 x 6	6.00	152	7.00	178
88-12FE9	8 x 8	8.00	203	8.00	203

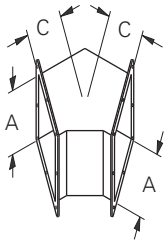

45° Elbow

- Includes (1) gasket & hardware

Catalog Number	Size	A in.	A mm	C in.	C mm
44-12FE45	4 x 4	4.00	102	2.50	64
66-12FE45	6 x 6	6.00	152	2.93	74
88-12FE45	8 x 8	8.00	203	3.31	84

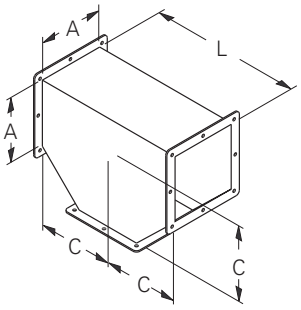

Tee

- Includes (2) gaskets & hardware

Catalog Number	Size	A in.	A mm	C in.	C mm	L in.	L mm
44-12FT	4 x 4	4.00	102	6.00	152	12.00	305
66-12FT	6 x 6	6.00	152	7.00	178	14.00	356
88-12FT	8 x 8	8.00	203	8.00	203	16.00	406

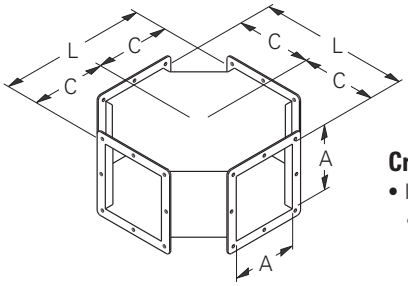

Cross

- Includes (3) gaskets & hardware

Catalog Number	Size	A in.	A mm	C in.	C mm	L in.	L mm
44-12FC	4 x 4	4.00	102	6.00	152	12.00	305
66-12FC	6 x 6	6.00	152	7.00	178	14.00	356
88-12FC	8 x 8	8.00	203	8.00	203	16.00	406

Notes: 'C' dimensions are from intersection of center lines. All dimensions are to inside surfaces.
Allow .12" (3mm) for flange gasket when joining pieces. Flange holes are .28: dia. (7mm). Flange radii are .37" (9mm).
Dimensions are in inches. Millimeters shown are for reference only. Data subject to change without notice.

Feed-Through Wireway Type 4X

Data Sheet

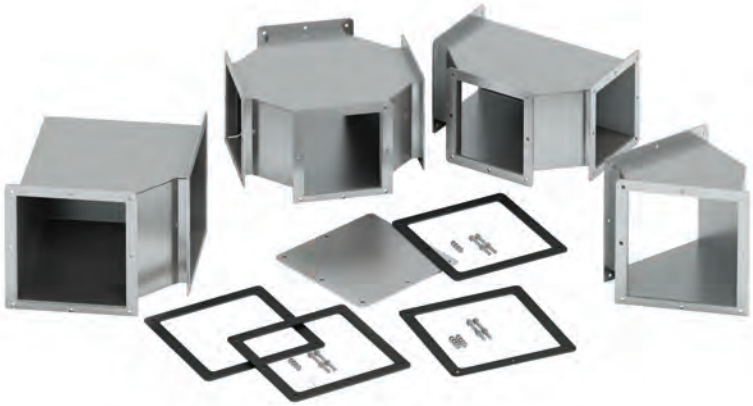

Application

- Houses runs of control and power cables
- Intended for indoor or outdoor use where a corrosive environment exists
- Protects against corrosion, windblown dust and rain, splashing water and hose-directed water

Standards

- UL 870 listed, unless noted
- CSA C22.2 No. 26 certified, unless noted
- Conforms to NEMA standard for Type 4X

Finish

- Outer surface of wireway body and cover has a smooth brushed finish
- Wireway body and cover is also available in Type 316 stainless steel upon special request

Accessories

- Box connector
- Closure plate
- Barrier kit
- Bracket hanger
- Drop hanger

Construction

- Wireway body and cover are fabricated from Type 304 stainless steel
- Flanges are (10) gauge stainless steel
- All continuous welded seams are finished smooth
- External and internal edges are rounded to prevent injury or damage to cable
- Covers are secured to the wireway body with heavy-duty hinges on one side and easy-to-operate screw clamps mounted to the opposite side
- Continuous flanged ends assure rigid connections of wireway and fittings
- Cover has a seamless poured in-place gasket
- An oil-resistant gasket is provided for installation between flanges

Discount Schedule: C2

Subclass: Z70

Notes: We can provide special sizes, finishes and other modifications. Consult the factory for your special requirements.

Feed-Through Wireway Type 4X

Illustration Sheet and Catalog Number

Subclass: Z70

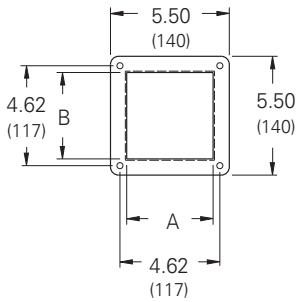

4.00 x 4.00

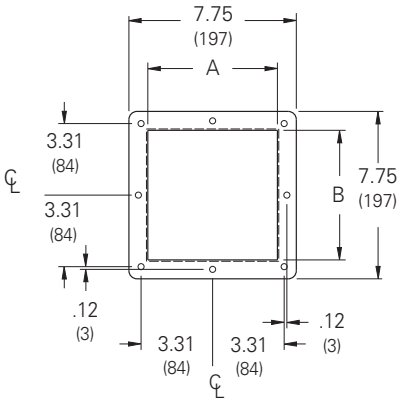

6.00 x 6.00

Flange Detail

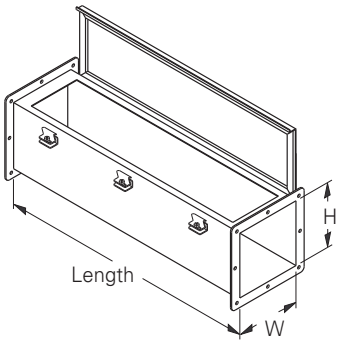

Wireway Section

- Lengths from 12.00″ (305 mm) to 120.00″ (3048 mm)

Actual Length For	in.	mm
12	11.94	303
24	23.94	608
36	35.94	913
48	47.94	1218
60	59.94	1522
120	119.94	3046

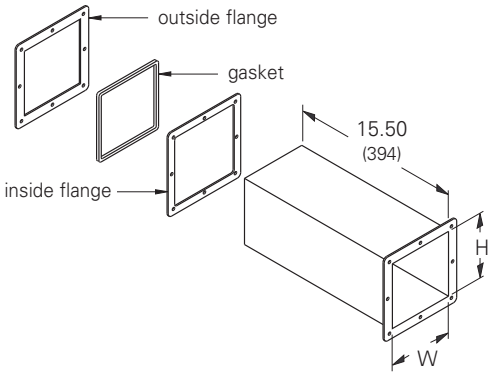

Telescopic Fitting

- Adjustable lengths from 1.50″ (38 mm) to 13.50″ (343 mm)
- No cutting or welding required

Catalog Number	Size	H in.	H mm	W in.	W mm
44-4XSFTF *	4 x 4	3.82	97	3.82	97
66-4XSFTF *	6 x 6	5.82	148	5.82	148

* Not UL or CSA Listed fitting.

Straight Section

- Includes (1) gasket kit

Catalog Number	Size	H in.	H mm	W in.	W mm
44(*)-4XSFW	4 x 4	4.00	102	4.00	102
66(*)-4XSFW	6 x 6	6.00	152	6.00	152

(*) Insert for length **12** = 12″, **24** = 24″, **36** = 36″, **48** = 48″, **60** = 60″, **120** = 120″.

Notes: Dimensions are in inches. Millimeters shown are for reference only. Data subject to change without notice.

Feed-Through Wireway Type 4X

Illustration Sheet and Catalog Number

Subclass: Z70

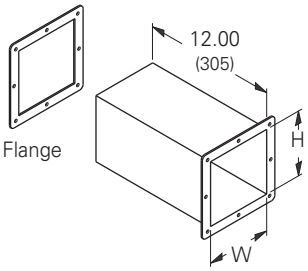

Cut-Off Fitting

- Length up to 12.00″ (305 mm)
- Shorten to desired length and weld on flange

Catalog Number	Size	H		W	
		in.	mm	in.	mm
44-4XSFCF	4 x 4	4.00	102	4.00	102
66-4XSFCF	6 x 6	6.00	152	6.00	152

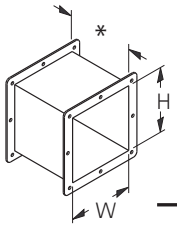

Nipple

* Lengths from 1.00″ (25 mm) to 6.00″ (152 mm)

Catalog Number	Size	H		W	
		in.	mm	in.	mm
44-4XSFN(*)	4 x 4	4.00	102	4.00	102
66-4XSFN(*)	6 x 6	6.00	152	6.00	152

(*) Insert **1** for 1″ nipple (L = .938″)
Insert **2** for 2″ nipple (L = 1.938″)
Insert **3** for 3″ nipple (L = 2.938″)
Insert **6** for 6″ nipple (L = 5.938″)

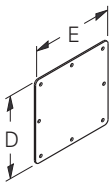

Closure Plate

- Includes hardware

Catalog Number	Size	D		E	
		in.	mm	in.	mm
44-4XSFCP	4 x 4	5.50	140	5.50	140
66-4XSFCP	6 x 6	7.75	197	7.75	197

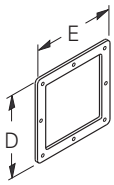

Box Connector

- Includes hardware

Catalog Number	Size	D		E	
		in.	mm	in.	mm
44-4XSFBC	4 x 4	5.50	140	5.50	140
66-4XSFBC	6 x 6	7.75	197	7.75	197

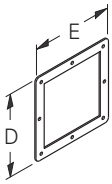

Gasket Kit

Catalog Number	Size	D		E	
		in.	mm	in.	mm
44-4XSFGK	4 x 4	5.50	140	5.50	140
66-4XSFGK	6 x 6	7.75	197	7.75	197

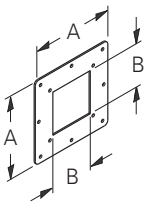

Center

Reducer

- Includes hardware

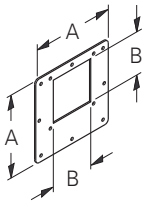

Edge

Catalog Number Center	Catalog Number Edge	Size	A		B	
			in.	mm	in.	mm
6644-4XSFRC	6644-4XSFRE	6 to 4	5.50	140	4.00	102

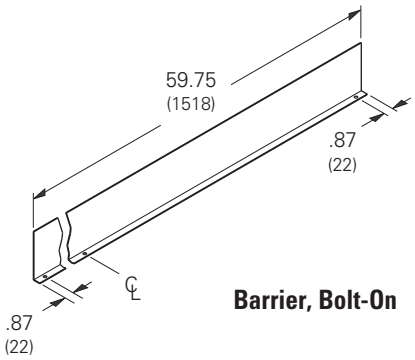

Barrier, Bolt-On

Catalog Number	Size	Height	
		in.	mm
44-12BK	4 x 4	3.00	76
66-12BK	6 x 6	4.50	114

Notes: Dimensions are in inches. Millimeters shown are for reference only. Data subject to change without notice.

Feed-Through Wireway Type 4X

Illustration Sheet and Catalog Number

Subclass: Z70

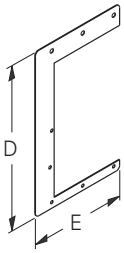

Drop

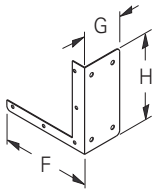

Bracket

Wireway Hangers

- Includes wireway to bracket mounting hardware
- Anchors not included

Catalog Number Drop	Catalog Number Bracket	Size	D in.	D mm	E in.	E mm	F in.	F mm	G in.	G mm	H in.	H mm
44-4XSDH	44-4XSBH	4 x 4	12.00	305	6.00	152	6.25	159	3.62	92	6.00	152
66-4XSDH	66-4XSBH	6 x 6	16.00	406	8.25	210	8.50	216	3.62	92	8.00	203

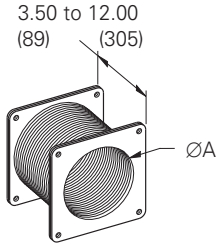

Flexible Fitting

- Isolates wireway from shock or vibration and compensates for misalignment. 90° maximum angle. Hypalon bellow with steel flanges.

Catalog Number	Size	ØA in.	ØA mm
44-4XSFFF *	4 x 4	4.00	102
66-4XSFFF *	6 x 6	6.00	152

* Not UL or CSA Listed fitting.

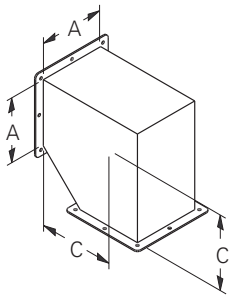

90° Elbow

- Includes (1) gasket & hardware

Catalog Number	Size	A in.	A mm	C in.	C mm
44-4XSFE9	4 x 4	4.00	102	6.00	152
66-4XSFE9	6 x 6	6.00	152	7.00	178

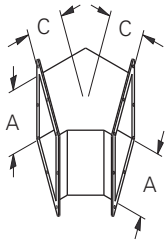

45° Elbow

- Includes (1) gasket & hardware

Catalog Number	Size	A in.	A mm	C in.	C mm
44-4XSFE45	4 x 4	4.00	102	2.77	70
66-4XSFE45	6 x 6	6.00	152	3.18	81

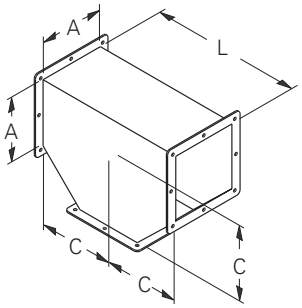

Tee

- Includes (2) gaskets & hardware

Catalog Number	Size	A in.	A mm	C in.	C mm	L in.	L mm
44-4XSFT	4 x 4	4.00	102	6.00	152	12.00	305
66-4XSFT	6 x 6	6.00	152	7.00	178	14.00	356

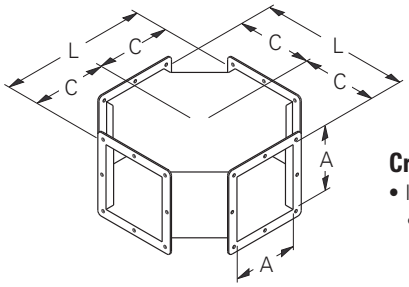

Cross

- Includes (3) gaskets & hardware

Catalog Number	Size	A in.	A mm	C in.	C mm	L in.	L mm
44-4XSFC	4 x 4	4.00	102	6.00	152	12.00	305
66-4XSFC	6 x 6	6.00	152	7.00	178	14.00	356

Notes: 'C' dimensions are from intersection of center lines. All dimensions are to inside surfaces.
Allow .12" (3mm) for flange gasket when joining pieces. Flange holes are .28: dia. (7mm). Flange radii are .37" (9mm).
Dimensions are in inches. Millimeters shown are for reference only. Data subject to change without notice.

Wiring Troughs
Type 1 Screw Cover
Data Sheet

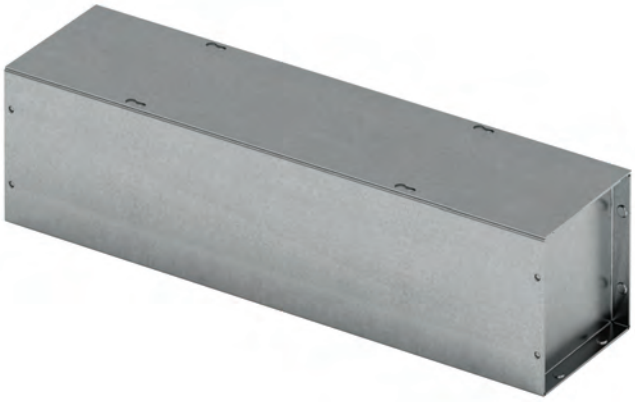

Application
- Used for indoor cable and wire junction, distribution, and termination applications where dirt, dust, oil, and water are not serious problems

Standards
- UL 870 listed, Type 1
- CSA C22.2 No. 26 certified, Type 1
- Conforms to NEMA standard for Type 1

Finish
- Galvanized Steel

Accessories
- See Accessories section

Construction
- Covers and bodies are fabricated from code gauge galvanized steel (see table, page 41)
- Bodies have mounting holes on the back
- Cover is held secure to the body by plated screws
- Keyhole slots on the trough cover allow removal of cover without removing screws
- Shipped complete with permanently connected ends

Discount Schedule: A2

Subclass: AN1

Notes: We can provide special sizes, finishes and other modifications. Consult the factory for your special requirements.

Wiring Troughs
Type 1 Screw Cover
Illustration Sheet and Catalog Number

Subclass: AN1

Catalog Number	Height x Depth x Length A x B x C		D		Gauge	
	in.	mm	in.	mm	in.	mm
4412 GTGV NK	4.00 x 4.00 x 12.00	102 x 102 x 305	2.75	69.8	16	1.4
4424 GTGV NK	4.00 x 4.00 x 24.00	102 x 102 x 610	2.75	69.8	16	1.4
4436 GTGV NK	4.00 x 4.00 x 36.00	102 x 102 x 914	2.75	69.8	16	1.4
4448 GTGV NK	4.00 x 4.00 x 48.00	102 x 102 x 1219	2.75	69.8	16	1.4
4460 GTGV NK	4.00 x 4.00 x 60.00	102 x 102 x 1524	2.75	69.8	16	1.4
4472 GTGV NK	4.00 x 4.00 x 72.00	102 x 102 x 1829	2.75	69.8	16	1.4
6612 GTGV NK	6.00 x 6.00 x 12.00	152 x 152 x 305	4.25	107.9	16	1.4
6624 GTGV NK	6.00 x 6.00 x 24.00	152 x 152 x 610	4.25	107.9	16	1.4
6636 GTGV NK	6.00 x 6.00 x 36.00	152 x 152 x 914	4.25	107.9	16	1.4
6648 GTGV NK	6.00 x 6.00 x 48.00	152 x 152 x 1219	4.25	107.9	16	1.4
6660 GTGV NK	6.00 x 6.00 x 60.00	152 x 152 x 1524	4.25	107.9	16	1.4
6672 GTGV NK	6.00 x 6.00 x 72.00	152 x 152 x 1829	4.25	107.9	16	1.4
8824 GTGV NK	8.00 x 8.00 x 24.00	203 x 203 x 610	6.00	152.4	14	1.9
8836 GTGV NK	8.00 x 8.00 x 36.00	203 x 203 x 914	6.00	152.4	14	1.9
8848 GTGV NK	8.00 x 8.00 x 48.00	203 x 203 x 1219	6.00	152.4	14	1.9
8860 GTGV NK	8.00 x 8.00 x 60.00	203 x 203 x 1524	6.00	152.4	14	1.9
8872 GTGV NK	8.00 x 8.00 x 72.00	203 x 203 x 1829	6.00	152.4	14	1.9
101048 GTGV NK	10.00 x 10.00 x 48.00	254 x 254 x 1219	8.00	203.2	14	1.9
121224 GTGV NK	12.00 x 12.00 x 24.00	305 x 305 x 610	10.00	254.0	14	1.9
121236 GTGV NK	12.00 x 12.00 x 36.00	305 x 305 x 914	10.00	254.0	14	1.9
121248 GTGV NK	12.00 x 12.00 x 48.00	305 x 305 x 1219	10.00	254.0	14	1.9

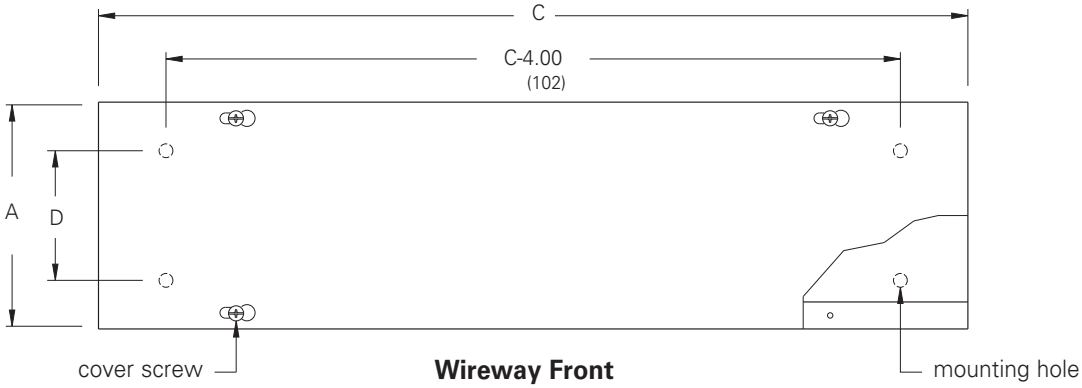

Wireway Front

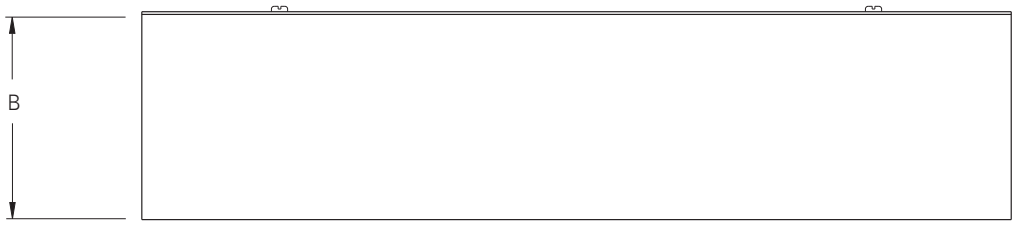

Wireway Side

Notes: Dimensions are in inches. Millimeters shown are for reference only. Data subject to change without notice.

Wiring Troughs
Type 3R Screw Cover, Painted & Galvanized
Data and Illustration Sheet

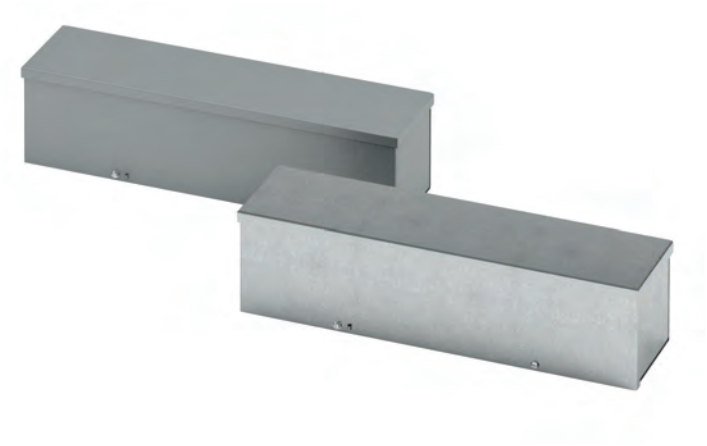

Application
- Houses runs of control and power cable
- Used for cable and wire junction, distribution and termination

Standards
- UL 870 listed, Type 3R
- CSA C22.2 No. 26 certified, Type 3R
- Conforms to NEMA standard for Type 3R

Finish
- Wash and phosphate undercoat or galvanized steel
- ANSI 61 gray acrylic electrocoat finish

Accessories
- Sealing devices
- Touch-up paint
- See Accessories section

Construction
- Wireway body and cover are fabricated from (16) gauge galvaneal steel for painted or galvanized steel
- Wireway body has embossed mounting holes on the back
- Wireway is available with or without knockouts on the bottom end only, (see drawing)
- Cover is held secure by sliding it under the top end flange and fastening it with plated screws on the bottom end flange
- Sealing screws and lances are located at each end of the wireway cover
- Wireway exceeding 72 inches in length has two covers, a removable center channel and body supports

Discount Schedule: A2

Subclass: AM1 - Painted & Z50 - Galvanized

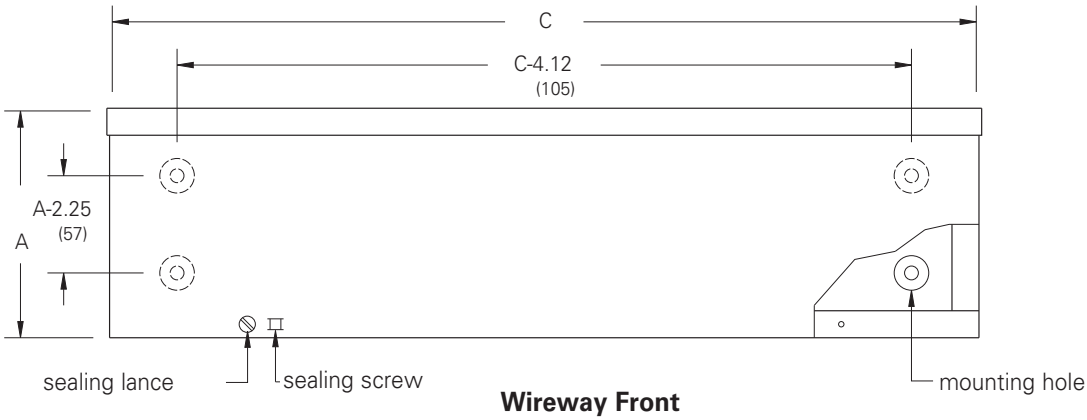

Wireway Front

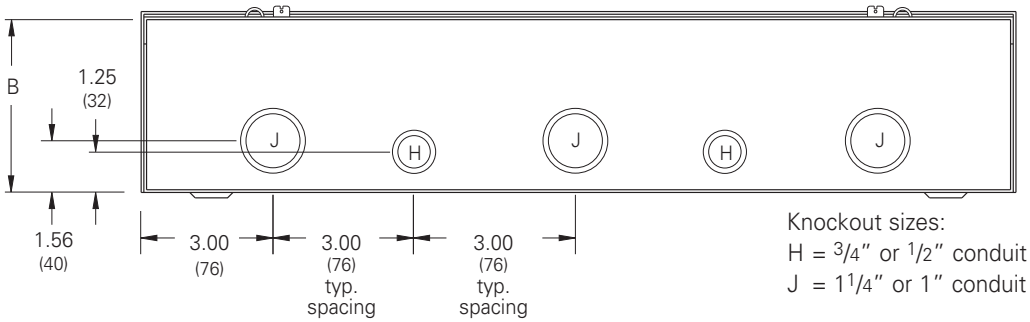

Wireway Bottom

Notes: We can provide special sizes, finishes and other modifications. Consult the factory for your special requirements.

Wiring Troughs
Type 3R Screw Cover, Painted & Galvanized
Catalog Number

Subclass: AM1 - Painted & Z50 - Galvanized

Wireway Catalog Number				Wireway Size		Knockout Quantity
Painted		Galvanized		Height x Depth x Length A x B x C		
KO	No KO	KO	No KO	in.	mm	Bottom
4412 GRT	4412 GRT NK	--	4412 GRTGV NK	4.00 x 4.00 x 12.00	102 x 102 x 305	3
4418 GRT	4418 GRT NK	--	--	4.00 x 4.00 x 18.00	102 x 102 x 457	5
4424 GRT	4424 GRT NK	--	4424 GRTGV NK	4.00 x 4.00 x 24.00	102 x 102 x 610	7
4436 GRT	4436 GRT NK	--	4436 GRTGV NK	4.00 x 4.00 x 36.00	102 x 102 x 914	11
4448 GRT	4448 GRT NK	--	4448 GRTGV NK	4.00 x 4.00 x 48.00	102 x 102 x 1219	15
4460 GRT	4460 GRT NK	--	4460 GRTGV NK	4.00 x 4.00 x 60.00	102 x 102 x 1524	19
4472 GRT	4472 GRT NK	--	4472 GRTGV NK	4.00 x 4.00 x 72.00	102 x 102 x 1829	23
--	4496 GRT NK	--	--	4.00 x 4.00 x 96.00	102 x 102 x 2438	31
--	44120 GRT NK	--	44120 GRTGV NK	4.00 x 4.00 x 120.00	102 x 102 x 3048	35
6612 GRT	6612 GRT NK	--	6612 GRTGV NK	6.00 x 6.00 x 12.00	152 x 152 x 305	3
6618 GRT	6618 GRT NK	--	6618 GRTGV NK	6.00 x 6.00 x 18.00	1152 x 152 x 457	5
6624 GRT	6624 GRT NK	--	6624 GRTGV NK	6.00 x 6.00 x 24.00	152 x 152 x 610	7
6636 GRT	6636 GRT NK	--	6636 GRTGV NK	6.00 x 6.00 x 36.00	152 x 152 x 914	11
6648 GRT	6648 GRT NK	--	6648 GRTGV NK	6.00 x 6.00 x 48.00	152 x 152 x 1219	15
6660 GRT	6660 GRT NK	--	6660 GRTGV NK	6.00 x 6.00 x 60.00	152 x 152 x 1524	19
6672 GRT	6672 GRT NK	--	6672 GRTGV NK	6.00 x 6.00 x 72.00	152 x 152 x 1829	23
--	6696 GRT NK	--	--	6.00 x 6.00 x 96.00	152 x 152 x 2438	31
--	66120 GRT NK	--	66120 GRTGV NK	6.00 x 6.00 x 120.00	152 x 152 x 3048	35
8812 GRT	8812 GRT NK	--	8812 GRTGV NK	8.00 x 8.00 x 12.00	203 x 203 x 305	3
8818 GRT	8818 GRT NK	--	--	8.00 x 8.00 x 18.00	203 x 203 x 457	5
8824 GRT	8824 GRT NK	--	8824 GRTGV NK	8.00 x 8.00 x 24.00	203 x 203 x 610	7
8836 GRT	8836 GRT NK	--	8836 GRTGV NK	8.00 x 8.00 x 36.00	203 x 203 x 914	11
8848 GRT	8848 GRT NK	--	8848 GRTGV NK	8.00 x 8.00 x 48.00	203 x 203 x 1219	15
8860 GRT	8860 GRT NK	--	8860 GRTGV NK	8.00 x 8.00 x 60.00	203 x 203 x 1524	19
8872 GRT	8872 GRT NK	--	8872 GRTGV NK	8.00 x 8.00 x 72.00	203 x 203 x 1829	23
--	8896 GRT NK	--	8896 GRTGV NK	8.00 x 8.00 x 96.00	203 x 203 x 2438	-
--	88120 GRT NK	--	88120 GRTGV NK	8.00 x 8.00 x 120.00	203 x 203 x 3048	-
--	101024 GRT NK	--	101024 GRTGV NK	10.00 x 10.00 x 24.00	254 x 254 x 610	-
--	101036 GRT NK	--	101036 GRTGV NK	10.00 x 10.00 x 36.00	254 x 254 x 914	-
--	101048 GRT NK	--	101048 GRTGV NK	10.00 x 10.00 x 48.00	254 x 254 x 1219	-
--	101060 GRT NK	--	101060 GRTGV NK	10.00 x 10.00 x 60.00	254 x 254 x 1524	-
--	101072 GRT NK	--	101072 GRTGV NK	10.00 x 10.00 x 72.00	254 x 254 x 1829	-
--	101096 GRT NK	--	101096 GRTGV NK	10.00 x 10.00 x 96.00	254 x 254 x 2438	-
--	1010120 GRT NK	--	1010120 GRTGV NK	10.00 x 10.00 x 120.00	254 x 254 x 3048	-
--	121224 GRT NK	--	121224 GRTGV NK	12.00 x 12.00 x 24.00	305 x 305 x 610	-
--	121236 GRT NK	--	121236 GRTGV NK	12.00 x 12.00 x 36.00	305 x 305 x 914	-
--	121248 GRT NK	--	121248 GRTGV NK	12.00 x 12.00 x 48.00	305 x 305 x 1219	-
--	121260 GRT NK	--	121260 GRTGV NK	12.00 x 12.00 x 60.00	305 x 305 x 1524	-
--	121272 GRT NK	--	121272 GRTGV NK	12.00 x 12.00 x 72.00	305 x 305 x 1829	-
--	121296 GRT NK	--	121296 GRTGV NK	12.00 x 12.00 x 96.00	305 x 305 x 2438	-
--	1212120 GRT NK	--	1212120 GRTGV NK	12.00 x 12.00 x 120.00	355 x 355 x 3048	-
--	141448 GRT NK	--	141448 GRTGV NK	14.00 x 14.00 x 48.00	355 x 355 x 1219	-
--	141472 GRT NK	--	141472 GRTGV NK	14.00 x 14.00 x 72.00	355 x 355 x 1829	-
--	141496 GRT NK	--	141496 GRTGV NK	14.00 x 14.00 x 96.00	355 x 355 x 2438	-
--	1414120 GRT NK	--	1414120 GRTGV NK	14.00 x 14.00 x 120.00	355 x 355 x 3048	-

Notes: Dimensions are in inches. Millimeters shown are for reference only. Data subject to change without notice.

Wiring Troughs
Type 12 Lift-Off Cover
Data Sheet

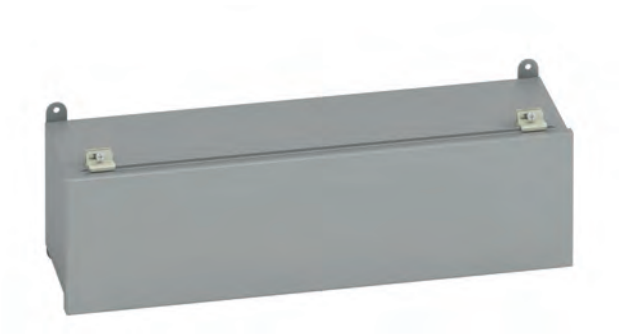

Application
- Houses runs of control and power cable
- Protects against circulating dust, falling dirt and dripping noncorrosive liquids

Standards
- UL 870 listed
- CSA C22.2 No. 26 certified
- Conforms to NEMA standard for Type 12

Finish
- Wash and phosphate undercoat
- ANSI 61 gray polyester powder finish
- Hardware and latches are zinc plated

Accessories
- Touch-up paint
- See Accessories section

Construction
- Wireway body and cover are fabricated from (14) gauge steel
- All continuous welded seams are finished smooth
- Cover is secured to the wireway body with semi-hinges on one side and easy-to-operate screw clamps mounted to the opposite side
- Two chains hold cover to the body when screw clamps are released
- Cover has a seamless poured in-place gasket
- External mounting feet are provided for wall mounting

Discount Schedule: C2

Subclass: DB0

Notes: We can provide special sizes, finishes and other modifications. Consult the factory for your special requirements.

Wiring Troughs
Type 12 Lift-Off Cover
Illustration Sheet and Catalog Number

Subclass: DB0

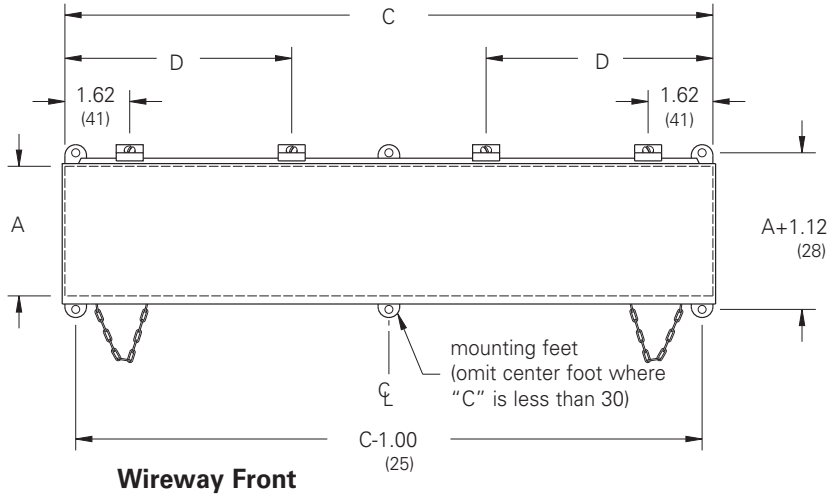

Wireway Front

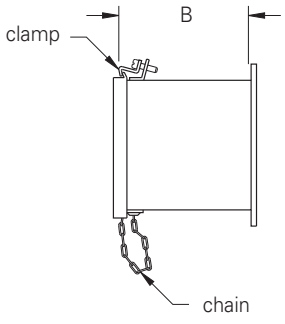

Wireway Side

Trough Catalog Number	Trough Size Width x Depth x Length A x B x C in.	mm	D in.	mm
4412-12WT	4.00 x 4.00 x 12.00	102 x 102 x 305	-	-
4418-12WT	4.00 x 4.00 x 18.00	102 x 102 x 457	-	-
4424-12WT	4.00 x 4.00 x 24.00	102 x 102 x 610	-	-
4430-12WT	4.00 x 4.00 x 30.00	102 x 102 x 762	15.00	381
4436-12WT	4.00 x 4.00 x 36.00	102 x 102 x 914	18.00	457
4448-12WT	4.00 x 4.00 x 48.00	102 x 102 x 1219	24.00	610
4460-12WT	4.00 x 4.00 x 60.00	102 x 102 x 1524	20.25	514
4472-12WT	4.00 x 4.00 x 72.00	102 x 102 x 1829	24.25	616
6612-12WT	6.00 x 6.00 x 12.00	152 x 152 x 305	-	-
6618-12WT	6.00 x 6.00 x 18.00	152 x 152 x 457	-	-
6624-12WT	6.00 x 6.00 x 24.00	152 x 152 x 610	-	-
6636-12WT	6.00 x 6.00 x 36.00	152 x 152 x 914	18.00	457
6648-12WT	6.00 x 6.00 x 48.00	152 x 152 x 1219	24.00	610
6660-12WT	6.00 x 6.00 x 60.00	152 x 152 x 1524	20.25	514
6672-12WT	6.00 x 6.00 x 72.00	152 x 152 x 1829	24.25	616
8812-12WT	8.00 x 8.00 x 12.00	203 x 203 x 305	-	-
8824-12WT	8.00 x 8.00 x 24.00	203 x 203 x 610	-	-
8836-12WT	8.00 x 8.00 x 36.00	203 x 203 x 914	18.00	457
8848-12WT	8.00 x 8.00 x 48.00	203 x 203 x 1219	24.00	610
8860-12WT	8.00 x 8.00 x 60.00	203 x 203 x 1524	20.25	514
8872-12WT	8.00 x 8.00 x 72.00	203 x 203 x 1829	24.25	616

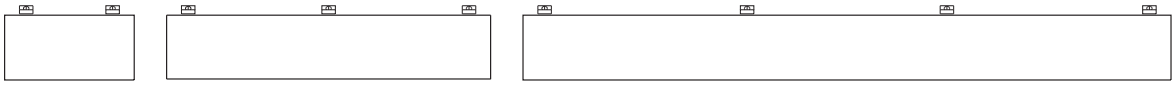

XX12-12WT
XX18-12WT
XX24-12WT

XX30-12WT
XX36-12WT
XX48-12WT

XX60-12WT
XX72-12WT

Cover Clamp Layout

Notes: Dimensions are in inches. Millimeters shown are for reference only. Data subject to change without notice.

Wiring Troughs
Type 4X Lift-Off Cover
Data Sheet

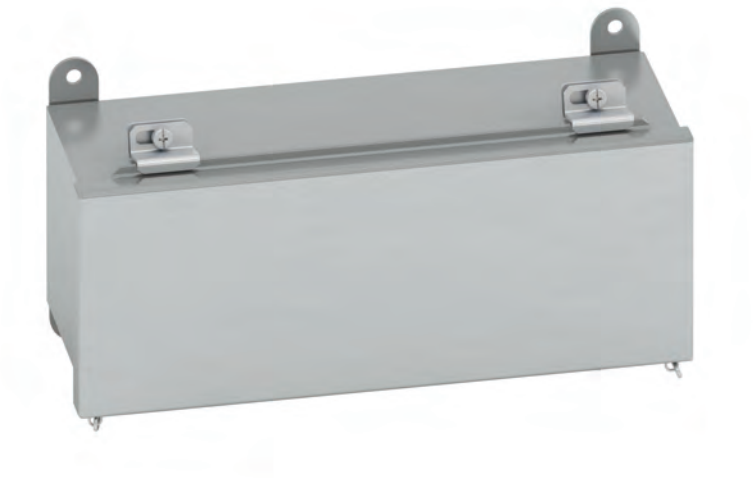

Application
- Houses runs of control and power cable
- Protects against corrosion, windblown dust and rain, splashing water and hose-directed water

Standards
- UL 870 listed
- CSA C22.2 No. 26 certified
- Conforms to NEMA standard for Type 4X

Finish
- Outer surface of wireway body and cover has a smooth brushed finish

Accessories
- Bracket hanger
- Drop hanger

Construction
- Wireway body and cover are fabricated from (14) gauge Type 304 stainless steel
- All continuous welded seams are finished smooth
- Cover is secured to the wireway body with semi-hinges on one side and easy-to-operate screw clamps mounted to the opposite side
- Two chains hold cover to the body when screw clamps are released
- Cover has a seamless poured in-place gasket
- External mounting feet are provided for wall mounting

Discount Schedule: C2

Subclass: U10

Notes: We can provide special sizes, finishes and other modifications. Consult the factory for your special requirements.

Wiring Troughs
Type 4X Lift-Off Cover
Illustration Sheet and Catalog Number

Subclass: U10

Trough Catalog Number	Trough Size Width x Depth x Length A x B x C in.	mm	D in.	mm
4412-4XSWT	4.00 x 4.00 x 12.00	102 x 102 x 305	-	-
4418-4XSWT	4.00 x 4.00 x 18.00	102 x 102 x 457	-	-
4424-4XSWT	4.00 x 4.00 x 24.00	102 x 102 x 610	-	-
4430-4XSWT	4.00 x 4.00 x 30.00	102 x 102 x 762	15.00	381
4436-4XSWT	4.00 x 4.00 x 36.00	102 x 102 x 914	18.00	457
4448-4XSWT	4.00 x 4.00 x 48.00	102 x 102 x 1219	24.00	610
4460-4XSWT	4.00 x 4.00 x 60.00	102 x 102 x 1524	20.25	514
4472-4XSWT	4.00 x 4.00 x 72.00	102 x 102 x 1829	24.25	616
6612-4XSWT	6.00 x 6.00 x 12.00	152 x 152 x 305	-	-
6618-4XSWT	6.00 x 6.00 x 18.00	152 x 152 x 457	-	-
6624-4XSWT	6.00 x 6.00 x 24.00	152 x 152 x 610	-	-
6636-4XSWT	6.00 x 6.00 x 36.00	152 x 152 x 914	18.00	457
6648-4XSWT	6.00 x 6.00 x 48.00	152 x 152 x 1219	24.00	610
6660-4XSWT	6.00 x 6.00 x 60.00	152 x 152 x 1524	20.25	514
6672-4XSWT	6.00 x 6.00 x 72.00	152 x 152 x 1829	24.25	616

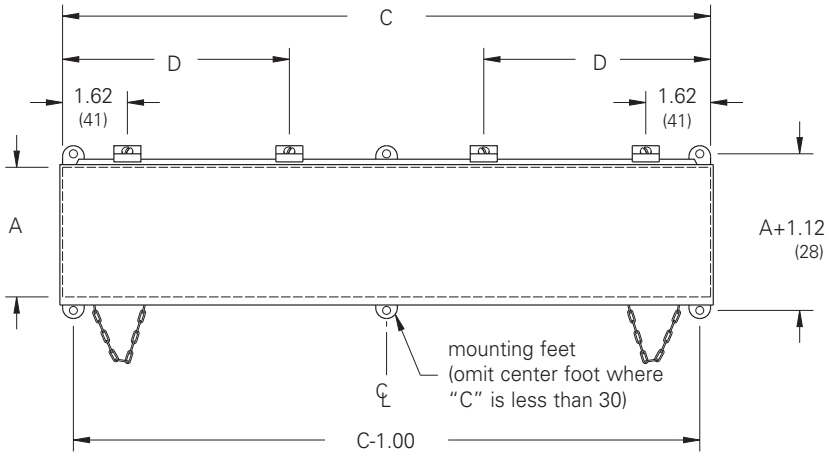

Wireway Front

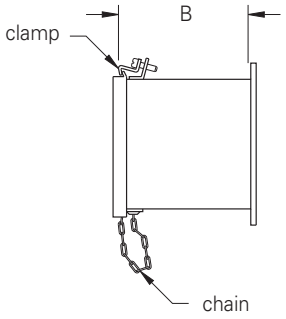

Wireway Side

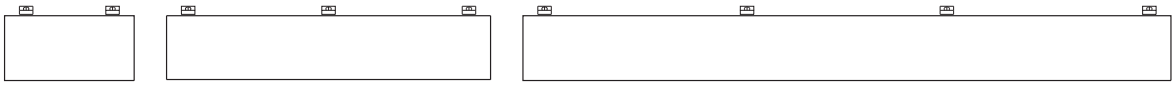

XX12-12WT
XX18-12WT
XX24-12WT

XX30-12WT
XX36-12WT
XX48-12WT

XX60-12WT
XX72-12WT

Cover Clamp Layout

Notes: Dimensions are in inches. Millimeters shown are for reference only. Data subject to change without notice.

Cable & Wire Management - Notes

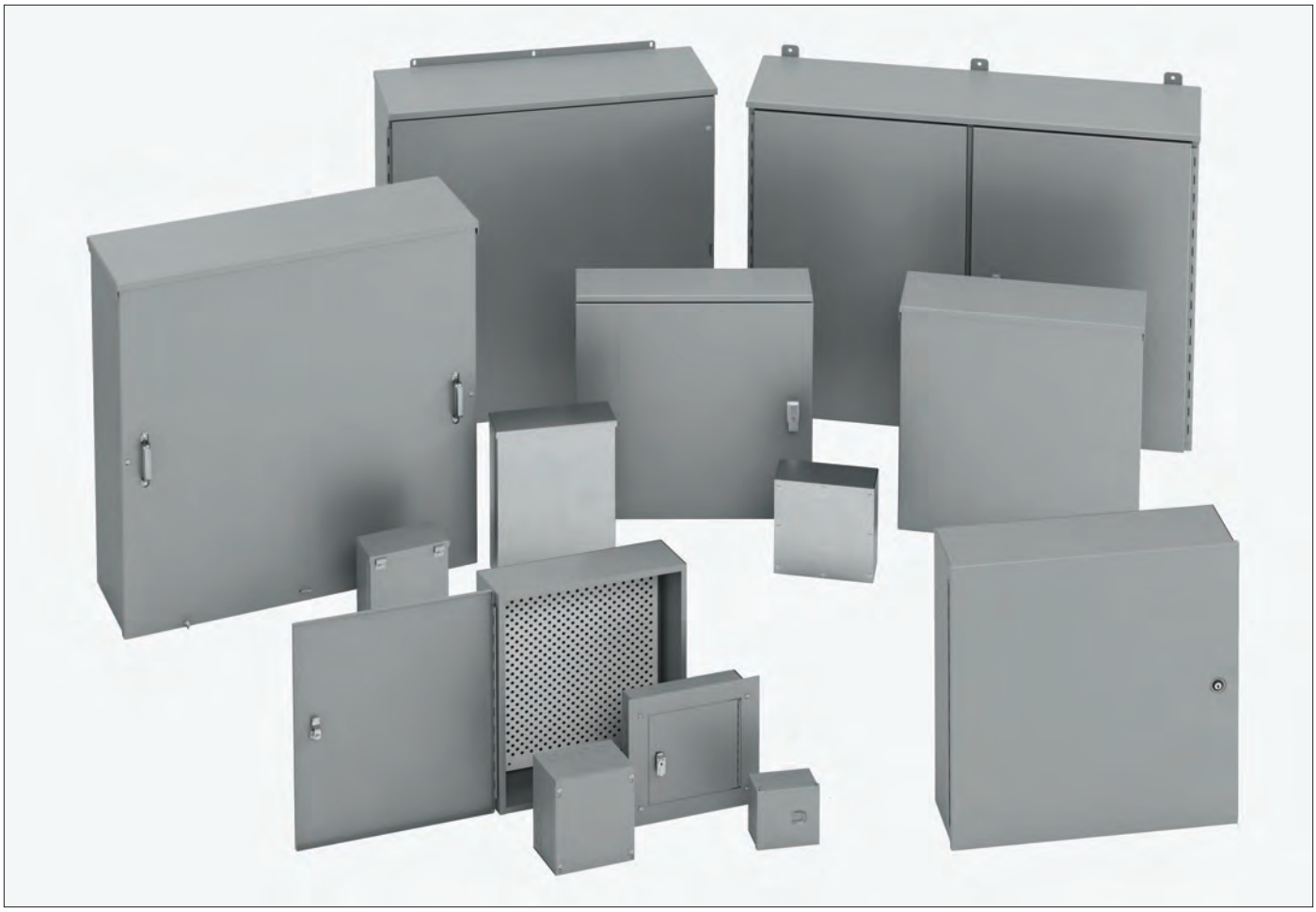

Junction Boxes Type 1 Screw Cover 50-53
Junction Boxes Type 1 Hinge Cover 54-55
Junction Boxes Type 3R Screw Cover 56-57
Junction Boxes Type 3R Hinge Cover 58-59
Junction Boxes Type 3 Screw Cover Gasketed 60-61
Junction Boxes Type 3 Weatherproof Screw Cover 62-63
Panel Enclosures Type 1 Small 64-65
Panel Enclosures Type 1 Medium 66-67
Panel Enclosures Type 1 Large 68-69
Panel Enclosures Type 1 Locking Hinge Cover w/Perforated Panel 70-71
Panel Enclosures Type 3R Small Continuous Hinge Cover 72-73
Panel Enclosures Type 3R Large Continuous Hinge Cover 74-75
Panel Enclosures Type 3R Double-Door 76-77
Utility Cabinets Type 1 Telephone Cabinets 78-80
Utility Cabinets Type 3R Telephone Cabinets 81-82
Utility Cabinets Type 3R Screw Cover Current Transformer Cabinets 83-85
Utility Cabinets Type 3R Hinge Cover Current Transformer Cabinets 86-87

Junction Boxes
Type 1 Screw Cover - Painted & Galvanized
Data and Illustration Sheet

Application
- Used as wiring boxes, junction and pull boxes
- Protects against contact with enclosed equipment

Standards
- UL 50 listed, Type 1
- CSA C22.2 No. 40 certified, Type 1
- Conforms to NEMA standard for Type 1

Finish
- Wash and phosphate undercoat or galvanized steel
- ANSI 61 gray acrylic electrocoat finish

Accessories
- Ground lug kit
- Touch-up paint
- See Accessories section

Construction
- Enclosure and cover are fabricated from code gauge steel or galvanized steel, (see table)
- Enclosure body has mounting holes on the back
- Enclosures are available with or without knockouts on the sides, top and bottom ends
- Cover is secured to the body with plated pan head combo screws
- Keyhole slots provided in the cover allow easy access to the inside without removing the screws
- Hole provision for optional ground lug kit
- Ground screw provided

Discount Schedule: A2

Subclass: AN0 (painted) & AX1 (galvanized)

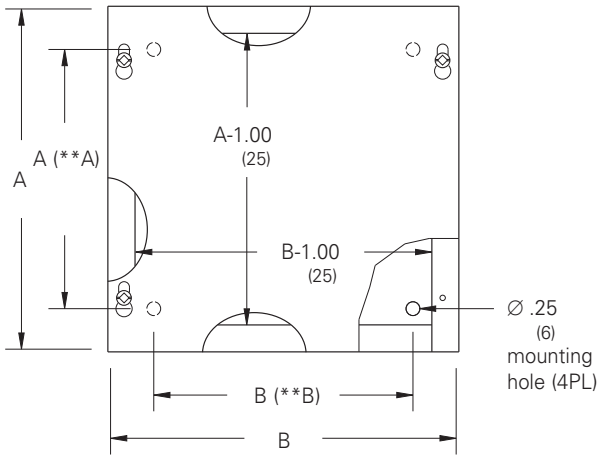

Front View

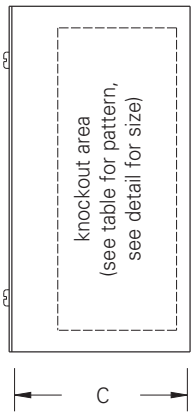

Side View

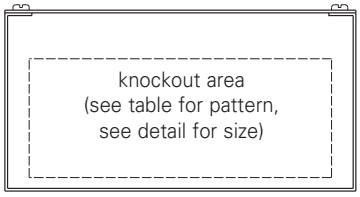

Bottom View

Dimensions:
**A = (-1.90) if 16 or 14 gauge
(-3.90) if 12 gauge
**B = (-2.00) if 16 or 14 gauge
(-4.00) if 12 gauge

Notes: We can provide special sizes, finishes and other modifications. Consult the factory for your special requirements. Dimensions are in inches. Millimeters shown are for reference only. Data subject to change without notice.

Junction Boxes
Type 1 Screw Cover - Painted & Galvanized
Catalog Number — Subclass: ANO - Painted & AX1 - Galvanized

Enclosure Catalog Number				Enclosure Size			Knockout Pattern	Knockout Pattern
Painted		Galvanized		Height x Width x Depth A x B x C				
KO	No KO	KO	No KO	in.	mm	Gauge	Each Side	Top & Bottom
443 SC	443 SC NK	443 SCGV	443 SCGV NK	4.00 x 4.00 x 3.00	102 x 102 x 76	16	C D	C D
444 SC	444 SC NK	444 SCGV	444 SCGV NK	4.00 x 4.00 x 4.00	102 x 102 x 102	16	C D	C D
644 SC	644 SC NK	644 SCGV	644 SCGV NK	6.00 x 4.00 x 4.00	152 x 102 x 102	16	C D E	C D
663 SC	663 SC NK	663 SCGV	663 SCGV NK	6.00 x 6.00 x 3.00	152 x 152 x 76	16	C D E	C D E
664 SC	664 SC NK	664 SCGV	664 SCGV NK	6.00 x 6.00 x 4.00	152 x 152 x 102	16	C D E	C D E
863 SC	863 SC NK	863 SCGV	863 SCGV NK	8.00 x 6.00 x 4300	203 x 152 x 76	16	G H I J	C D E
864 SC	864 SC NK	864 SCGV	864 SCGV NK	8.00 x 6.00 x 4.00	203 x 152 x 102	16	G H I J	C D E
884 SC	884 SC NK	884 SCGV	884 SCGV NK	8.00 x 8.00 x 4.00	203 x 203 x 102	16	G H I J	G H I J
--	1064 SC NK	--	1064 SCGV NK	10.00 x 6.00 x 4.00	254 x 152 x 102	16	--	--
1084 SC	1084 SC NK	1084 SCGV	1084 SCGV NK	10.00 x 8.00 x 4.00	254 x 203 x 102	16	G H I J	G H I J
10104 SC	10104 SC NK	10104 SCGV	10104 SCGV NK	10.00 x 10.00 x 4.00	254 x 254 x 102	16	G H I J	G H I J
1264 SC	1264 SC NK	--	1264 SCGV NK	12.00 x 6.00 x 4.00	305 x 152 x 102	16	D E F G H	C D E
1284 SC	1284 SC NK	1284 SCGV	1284 SCGV NK	12.00 x 8.00 x 4.00	305 x 203 x 102	16	D E F G H	G H I J
12104 SC	12104 SC NK	12104 SCGV	12104 SCGV NK	12.00 x 10.00 x 4.00	305 x 254 x 102	16	D E F G H	D E F G H
12124 SC	12124 SC NK	12124 SCGV	12124 SCGV NK	12.00 x 12.00 x 4.00	305 x 305 x 102	16	D E F G H	D E F G H
--	15154 SC NK	15154 SCGV	--	15.00 x 15.00 x 4.00	381 x 381 x 102	16	C D E F G H I	C D E F G H I
16124 SC	16124 SC NK	16124 SCGV	16124 SCGV NK	16.00 x 12.00 x 4.00	406 x 305 x 102	16	C D E F G H I	D E F G H
16164 SC	16164 SC NK	16164 SCGV	--	16.00 x 16.00 x 4.00	406 x 406 x 102	16	C D E F G H I	C D E F G H I
18124 SC	18124 SC NK	18124 SCGV	18124 SCGV NK	18.00 x 12.00 x 4.00	457 x 305 x 102	16	B C D E F G H I J	D E F G H
--	18154 SC NK	18154 SCGV	--	18.00 x 15.00 x 4.00	457 x 381 x 102	16	B C D E F G H I J	C D E F G H I
18184 SC	18184 SC NK	18184 SCGV	18184 SCGV NK	18.00 x 18.00 x 4.00	457 x 457 x 102	16	B C D E F G H I J	B C D E F G H I J
24124 SC	24124 SC NK	24124 SCGV	--	24.00 x 12.00 x 4.00	610 x 305 x 102	16	B C D E F G H I J	D E F G H
--	24184 SC NK	24184 SCGV	--	24.00 x 18.00 x 4.00	610 x 457 x 102	16	B C D E F G H I J	B C D E F G H I J
24244 SC	24244 SC NK	24244 SCGV	24244 SCGV NK	24.00 x 24.00 x 4.00	610 x 610 x 102	14	B C D E F G H I J	B C D E F G H I J
--	30184 SC NK	30184 SCGV	30184 SCGV NK	30.00 x 18.00 x 4.00	762 x 457 x 102	16	B C D E F G H I J	B C D E F G H I J
30244 SC	30244 SC NK	30244 SCGV	30244 SCGV NK	30.00 x 24.00 x 4.00	762 x 610 x 102	14	B C D E F G H I J	B C D E F G H I J
-	30304 SC NK	-	30304 SCGV NK	30.00 x 30.00 x 4.00	762 x 762 x 102	12	--	--

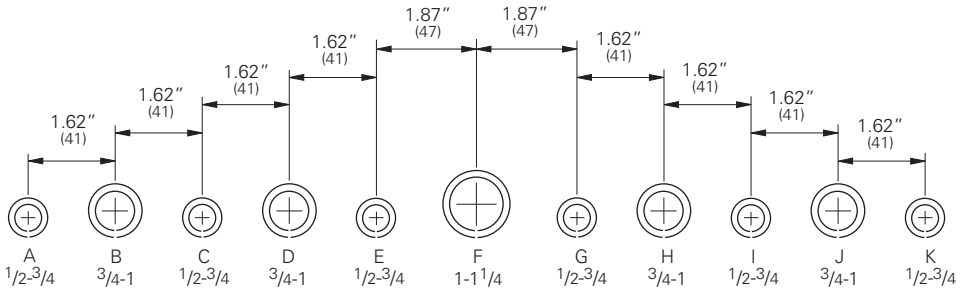

Conduit Sizes

Knockout Detail

Note: See table for applicable knockout pattern.

Notes: Dimensions are in inches. Millimeters shown are for reference only. Data subject to change without notice.

Junction Boxes
Type 1 Screw Cover - Painted & Galvanized

Catalog Number **Subclass: ANO - Painted & AX1 - Galvanized**

Enclosure Catalog Number Painted KO	Painted No KO	Galvanized KO	Galvanized No KO	Enclosure Size Height x Width x Depth A x B x C in.	mm	Gauge	Knockout Pattern Each Side	Knockout Pattern Top & Bottom
666 SC	666 SC NK	666 SCGV	666 SCGV NK	6.00 x 6.00 x 6.00	152 x 152 x 152	16	C D E	C D E
866 SC	866 SC NK	866 SCGV	866 SCGV NK	8.00x 6.00 x 6.00	203 x 152 x 152	16	G H I J	C D E
886 SC	886 SC NK	886 SCGV	886 SCGV NK	8.00 x 8.00 x 6.00	203 x 203 x 152	16	G H I J	G H I J
1086 SC	1086 SC NK	1086 SCGV	1086 SCGV NK	10.00 x 8.00 x 6.00	254 x 203 x 152	16	D E F G H	G H I J
10106 SC	10106 SC NK	10106 SCGV	10106 SCGV NK	10.00 x 10.00 x 6.00	254 x 254 x 152	16	D E F G H	D E F G H
--	1266 SC NK	--	--	12.00 x 6.00 x 6.00	305 x 152 x 152	16	--	--
--	1286 SC NK	--	1286 SCGV NK	12.00 x 8.00 x 6.00	305 x 203 x152	16	--	--
12106 SC	12106 SC NK	12106 SCGV	12106 SCGV NK	12.00 x 10.00 x 6.00	305 x 254 x152	16	D E F G H	D E F G H
12126 SC	12126 SC NK	12126 SCGV	12126 SCGV NK	12.00 x 12.00 x 6.00	305 x 305 x152	16	D E F G H	D E F G H
--	15156 SC NK	--	15156 SCGV NK	15.00 x 15.00 x 6.00	381 x 381 x152	16	--	--
16126 SC	16126 SC NK	16126 SCGV	16126 SCGV NK	16.00 x 12.00 x 6.00	406 x 305 x152	16	C D E F G H I	D E F G H
16166 SC	16166 SC NK	16166 SCGV	16166 SCGV NK	16.00 x 16.00 x 6.00	406 x 406x152	16	C D E F G H I	B C D E F G H I J
18126 SC	18126 SC NK	18126 SCGV	18126 SCGV NK	18.00 x 12.00 x 6.00	457 x 305x152	16	B C D E F G H I J	D E F G H
--	18156 SC NK	--	18156 SCGV NK	18.00 x 15.00 x 6.00	457 x 381x152	16	--	--
18186 SC	18186 SC NK	18186 SCGV	18186 SCGV NK	18.00 x 18.00 x 6.00	457 x 457x152	16	B C D E F G H I J	B C D E F G H I J
--	24126 SC NK	--	24126 SCGV NK	24.00 x 12.00 x 6.00	610 x 305x152	16	--	--
24186 SC	24186 SC NK	24186 SCGV	24186 SCGV NK	24.00 x 18.00 x 6.00	610 x 457x152	16	B C D E F G H I J	B C D E F G H I J
--	24206 SC NK	--	24206 SCGV NK	24.00 x 20.00 x 6.00	610 x 508x152	14	--	--
24246 SC	24246 SC NK	24246 SCGV	24246 SCGV NK	24.00 x 24.00 x 6.00	610 x 610x152	14	B C D E F G H I J	B C D E F G H I J
--	30186 SC NK	--	30186 SCGV NK	30.00 x 18.00 x 6.00	762 x 457 x 152	16	--	--
30246 SC	30246 SC NK	30246 SCGV	30246 SCGV NK	30.00 x 24.00 x 6.00	762 x 610 x 152	14	B C D E F G H I J	B C D E F G H I J
--	30306 SC NK	--	30306 SCGV NK	30.00 x 30.00 x 6.00	762 x 762 x 152	12	--	--
36246 SC	36246 SC NK	--	36246 SCGV NK	36.00 x 24.00 x 6.00	914 x 310 x 152	14	B C D E F G H I J	B C D E F G H I J
--	36306 SC NK	--	36306 SCGV NK	36.00 x 30.00 x 6.00	914 x 762 x 152	12	--	--
--	36366 SC NK	--	36366 SCGV NK	36.00 x 36.00 x 6.00	914 x 914 x 152	12	--	--
--	48366 SC NK	--	48366 SCGV NK	48.00 x 36.00 x 6.00	1219 x 914 x 152	12	--	--
--	48486 SC NK	--	48486 SCGV NK	48.00 x 48.00 x 6.00	1219 x 1219 x 152	12	--	--
888 SC	888 SC NK	888 SCGV	888 SCGV NK	8.00 x 8.00 x 8.00	203 x 203 x 203	16	G H I J	G H I J
--	10108 SC NK	--	10108 SCGV NK	10.00 x 10.00 x 8.00	254 x 254 x 203	16	--	--
12128 SC	12128 SC NK	--	12128 SCGV NK	12.00 x 12.00 x 8.00	305 x 305 x 203	16	D E F G H	D E F G H
16128 SC	16128 SC NK	--	16128 SCGV NK	16.00 x 12.00 x 8.00	406 x 305 x 203	16	C D E F G H I	D E F G H
18128 SC	18128 SC NK	--	18128 SCGV NK	18.00 x 12.00 x 8.00	457 x 305 x 203	16	B C D E F G H I J	D E F G H
18188 SC	18188 SC NK	--	18188 SCGV NK	18.00 x 18.00 x 8.00	457 x 457 x 203	16	B C D E F G H I J	B C D E F G H I J
24128 SC	24128 SC NK	--	24128 SCGV NK	24.00 x 12.00 x 8.00	610 x 305 x 203	16	B C D E F G H I J	D E F G H
24188 SC	24188 SC NK	--	24188 SCGV NK	24.00 x 18.00 x 8.00	610 x 457 x 203	16	B C D E F G H I J	B C D E F G H I J
--	24208 SC NK	--	24208 SCGV NK	24.00 x 20.00 x 8.00	610 x 508 x 203	14	--	--
24248 SC	24248 SC NK		24248 SCGV NK	24.00 x 24.00 x 8.00	610 x 610 x 203	14	B C D E F G H I J	B C D E F G H I J
30248 SC	30248 SC NK	30248 SCGV	30248 SCGV NK	30.00 x 24.00 x 8.00	762 x 610 x 203	14	B C D E F G H I J	B C D E F G H I J
--	30308 SC NK	--	30308 SCGV NK	30.00 x 30.00 x 8.00	762 x 762 x 203	12	--	--
36248 SC	36248 SC NK	--	36248 SCGV NK	36.00 x 24.00 x 8.00	914 x 610 x 203	14	B C D E F G H I J	B C D E F G H I J
--	36308 SC NK	--	36308 SCGV NK	36.00 x 30.00 x 8.00	914 x 762 x 203	14	--	--
--	36368 SC NK	--	36368 SCGV NK	36.00 x 36.00 x 8.00	914 x 914 x 203	14	--	--

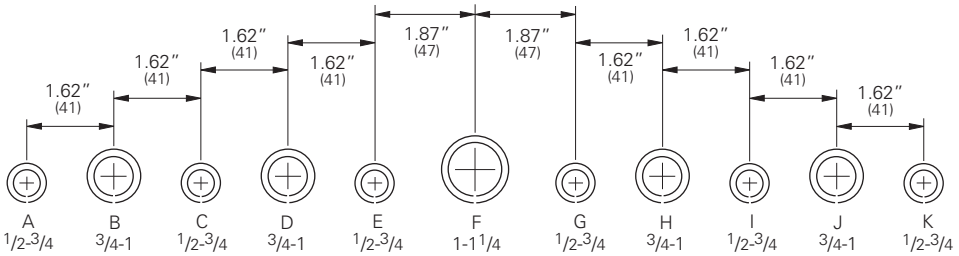

Conduit Sizes Knockout Detail - Note: See table for applicable knockout pattern.

Notes: Dimensions are in inches. Millimeters shown are for reference only. Data subject to change without notice.

Junction Boxes
Type 1 Screw Cover - Painted & Galvanized
Catalog Number **Subclass: ANO - Painted & AX1 - Galvanized**

Enclosure Catalog Number				Enclosure Size			Knockout Pattern	Knockout Pattern
Painted		Galvanized		Height x Width x Depth A x B x C				
KO	No KO	KO	No KO	in.	mm	Gauge	Each Side	Top & Bottom
--	121210 SC NK	--	121210 SCGV NK	12.00 x 12.00 x 10.00	305 x 305 x 254	16	--	--
181210 SC	181210 SC NK	--	181210 SCGV NK	18.00 x 12.00 x 10.00	457 x 305 x 254	16	B C D E F G H I J	D E F G H
181810 SC	181810 SC NK	--	181810 SCGV NK	18.00 x 18.00 x 10.00	457 x 457 x 254	16	B C D E F G H I J	B C D E F G H I J
--	241210 SC NK	--	241210 SCGV NK	24.00 x 12.00 x 10.00	610 x 305 x 254	16	--	--
241810 SC	241810 SC NK	--	241810 SCGV NK	24.00 x 18.00 x 10.00	610 x 457 x 254	16	B C D E F G H I J	B C D E F G H I J
242410 SC	242410 SC NK	--	242410 SCGV NK	24.00 x 24.00 x 10.00	610 x 610 x 254	14	B C D E F G H I J	B C D E F G H I J
--	302410 SC NK	--	302410 SCGV NK	30.00 x 24.00 x 10.00	762 x 610 x 254	14	--	--
--	303010 SC NK	--	303010 SCGV NK	30.00 x 30.00 x 10.00	762 x 762 x 254	14	--	--
--	362410 SC NK	--	362410 SCGV NK	36.00 x 24.00 x 10.00	914 x 610x x 254	14	--	--
--	363610 SC NK	--	363610 SCGV NK	36.00 x 36.00 x 10.00	914 x 914 x 254	12	--	--
--	121212 SC NK	--	121212 SCGV NK	12.00 x 12.00 x 12.00	305 x 305 x 305	16	--	--
181812 SC	181812 SC NK	--	181812 SCGV NK	18.00 x 18.00 x 12.00	457 x 457 x 305	16	B C D E F G H I J	B C D E F G H I J
241212 SC	241212 SC NK	--	241212 SCGV NK	24.00 x 12.00 x 12.00	610 x 305 x 305	16	B C D E F G H I J	D E F G H
241812 SC	241812 SC NK	--	241812 SCGV NK	24.00 x 18.00 x 12.00	610 x 457 x 305	16	B C D E F G H I J	B C D E F G H I J
242412 SC	242412 SC NK	--	242412 SCGV NK	24.00 x 24.00 x 12.00	610 x 610 x 305	14	B C D E F G H I J	B C D E F G H I J
302412 SC	302412 SC NK	--	302412 SCGV NK	30.00 x 24.00 x 12.00	762 x 610 x 305	14	B C D E F G H I J	B C D E F G H I J
--	303012 SC NK	--	303012 SCGV NK	30.00 x 30.00 x 12.00	762 x 762 x 305	12	--	--
362412 SC	362412 SC NK	--	362412 SCGV NK	36.00 x 24.00 x 12.00	914 x 610 x 305	14	B C D E F G H I J	B C D E F G H I J
--	363612 SC NK	--	363612 SCGV NK	36.00 x 36.00 x 12.00	914 x 914 x 305	12	--	--
--	484812 SC NK	--	484812 SCGV NK	48.00 x 48.00 x 12.00	1219 x 1219 x 305	12	--	--
--	303016 SC NK	--	--	30.00 x 30.00 x 16.00	762 x 762 x 406	12	--	--
--	363616 SC NK	--	363616 SCGV NK	36.00 x 36.00 x 16.00	914 x 914 x 406	12	--	--
--	484816 SC NK	--	484816 SCGV NK	48.00 x 48.00 x 16.00	1219 x 1219 x 406	12	--	--

Type 1 Flush & Surface Covers - Painted & Galvanized
Catalog Number **Subclass: ANO - Painted & AX1 - Galvanized**

Optional Flush Covers Catalog Number		Flush Cover Size		Fits Enclosure A x B			Replacement Surface Covers Catalog Number		Surface Cover Size		Fits Enclosure A x B		
Painted	Galvanized	in.	mm	in.	mm	Gauge	Painted	Galvanized	in.	mm	in.	mm	Gauge
44 SCF	--	5.50 x 5.50	140 x 140	4.00 x 4.00	102 x 102	16	--	--	--	--	--	--	--
66 SCF	--	7.50 x 7.50	191 x 191	6.00 x 6.00	152 x 152	16	66 SCS	--	6.09 x 6.09	155 x 155	6.00 x 6.00	152 x 152	16
86 SCF	--	9.50 x 7.50	241 x 191	8.00 x 6.00	203 x 152	16	--	--	--	--	--	--	--
88 SCF	--	9.50 x 9.50	241 x 241	8.00 x 8.00	203 x 203	16	88 SCS	--	8.09 x 8.09	205 x 205	8.00 x 8.00	203 x 203	16
108 SCF	--	11.50 x 9.50	292 x 241	10.00 x 8.00	254 x 203	16	--	--	--	--	--	--	--
1010 SCF	--	11.50 x 11.50	292 x 292	10.00 x 10.00	254 x 254	16	1010 SCS	--	10.09 x 10.09	256 x 256	10.00 x 10.00	254 x 254	16
128 SCF	--	13.50 x 11.50	343 x 241	12.00 x 8.00	305 x 203	16	--	--	--	--	--	--	--
1212 SCF	--	13.50 x 13.50	343 x 343	12.00 x 12.00	305 x 305	16	1212 SCS	--	12.09 x 12.09	307 x 307	12.00 x 12.00	305 x 305	16
1616 SCF	--	17.50 x 17.50	445 x 445	16.00 x 16.00	406 x 406	14	--	--	--	--	--	--	--
1812 SCF	--	19.50 x 13.50	495 x 343	18.00 x 12.00	457 x 305	14	--	--	--	--	--	--	--
1818 SCF	--	19.50 x 19.50	495 x 495	18.00 x 18.00	457 x 457	14	1818 SCS	--	18.09 x 18.09	459 x 459	18.00 x 18.00	457 x 457	16
2418 SCF	--	25.50 x 19.50	648 x 495	24.00 x 18.00	610 x 457	12	--	--	--	--	--	--	--
2424 SCF	--	25.50 x 24.50	648 x 622	24.00 x 24.00	610 x 610	12	2424 SCS	--	24.09 x 24.09	612 x 612	24.00 x 24.00	610 x610	14

Notes: Dimensions are in inches. Millimeters shown are for reference only. Data subject to change without notice.

Junction Boxes
Type 1 Hinge Cover
Data Sheet and Catalog Number

Application
- Used as wiring boxes, junction and pull boxes
- Protects against contact with enclosed equipment

Standards
- UL 50 listed, Type 1
- CSA C22.2 No. 40 certified, Type 1
- Conforms to NEMA standard for Type 1

Finish
- Wash and phosphate undercoat
- ANSI 61 gray acrylic electrocoat finish

Accessories
- Ground lug kit
- Touch-up paint
- See Accessories section

Construction
- Enclosure and cover are fabricated from (16) gauge steel
- Enclosure body has mounting holes on the back
- Enclosures are available with or without knockouts on the sides, top and bottom ends
- Removable cover is secured to the body with T-Slot hinges on one side and a friction dimple catch on the opposite side
- Cover is furnished with a recessed pull ring for opening convenience
- Hole provision for optional ground lug kit
- Ground screw provided

Discount Schedule: A2

Subclass: A00

Enclosure Catalog Number KO	Enclosure Size Height x Width x Depth A x B x C in.	mm	Knockout Pattern Each Side	Knockout Pattern Top & Bottom
664 HC	6.00 x 6.00 x 4.00	152 x 152 x 102	C D E	C D E
864 HC	8.00 x 6.00 x 4.00	203 x 152 x 102	G H I J	C D E
884 HC	8.00 x 8.00 x 4.00	203x x 203 x 102	G H I J	G H I J
1084 HC	10.00 x 8.00 x 4.00	254 x 203 x 102	D E F G H	G H I J
10104 HC	10.00 x 10.00 x 4.00	254 x 254 x 102	D E F G H	D E F G H
1284 HC	12.00 x 8.00 x 4.00	305 x 203 x 102	D E F G H	G H I J
12104 HC	12.00 x 10.00 x 4.00	305 x 254 x 102	D E F G H	D E F G H
12124 HC	12.00 x 12.00 x 4.00	305 x 305 x 102	D E F G H	D E F G H
18124 HC	18.00 x 12.00 x 4.00	457 x 305 x 102	B C D E F G H I J	D E F G H
666 HC	6.00 x 6.00 x 6.00	152 x 152 x 152	C D E	C D E
886 HC	8.00 x 8.00 x 6.00	203 x 203 x 152	G H I J	G H I J
1086 HC	10.00 x 8.00 x 6.00	254 x 203 x 152	D E F G H	G H I J
10106 HC	10.00 x 10.00 x 6.00	254 x 254 x 152	D E F G H	D E F G H
12106 HC	12.00 x 10.00 x 6.00	305 x 254 x 152	D E F G H	D E F G H
12126 HC	12.00 x 12.00 x 6.00	305 x 305 x 152	D E F G H	D E F G H
16126 HC	16.00 x 12.00 x 6.00	406 x 305 x 152	C D E F G H I	D E F G H
16166 HC	16.00 x 16.00 x 6.00	406 x 406 x 152	C D E F G H I	C D E F G H I
18126 HC	18.00 x 12.00 x 6.00	457 x 305 x 152	B C D E F G H I J	D E F G H
18186 HC	18.00 x 18.00 x 6.00	457 x 457 x 152	B C D E F G H I J	B C D E F G H I J
24186 HC	24.00 x 18.00 x 6.00	610 x 457 x 152	B C D E F G H I J	B C D E F G H I J
24246 HC	24.00 x 24.00 x 6.00	610 x 610 x 152	B C D E F G H I J	B C D E F G H I J
30246 HC	30.00 x 24.00 x 6.00	762 x 610 x 152	B C D E F G H I J	B C D E F G H I J
36246 HC	36.00 x 24.00 x 6.00	914 x 610 x 152	B C D E F G H I J	B C D E F G H I J
36248 HC	36.00 x 24.00 x 8.00	914 x 610 x 203	B C D E F G H I J	B C D E F G H I J

Notes: We can provide special sizes, finishes and other modifications. Consult the factory for your special requirements. Dimensions are in inches. Millimeters shown are for reference only. Data subject to change without notice.

Junction Boxes
Type 1 Hinge Cover
Illustration Sheet

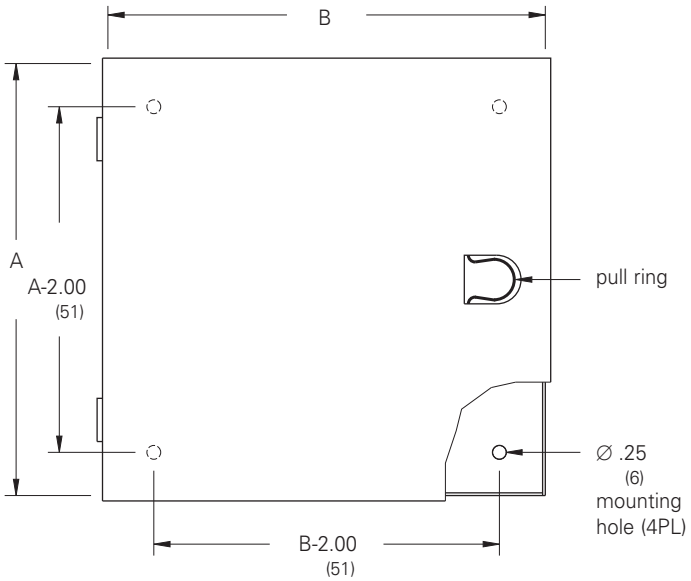

Front View

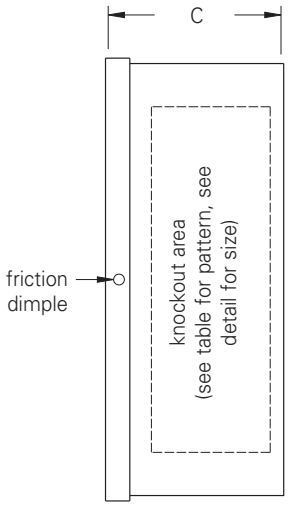

Side View

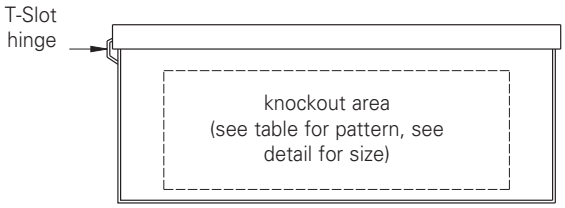

Bottom View

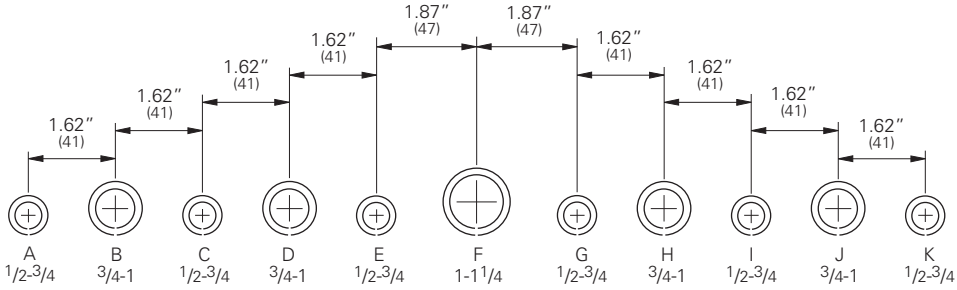

Conduit Sizes

Knockout Detail

Note: See table for applicable knockout pattern.

Notes: Dimensions are in inches. Millimeters shown are for reference only. Data subject to change without notice.

Junction Boxes
Type 3R Screw Cover - Painted & Galvanized
Data and Illustration Sheet

Application
- Used as wiring boxes, junction and pull boxes
- Protects against falling rain, sleet and external ice formation

Standards
- UL 50 listed, Type 3R
- CSA C22.2 No. 40 certified, Type 3R
- Conforms to NEMA standard for Type 3R

Finish
- Wash and phosphate undercoat
- ANSI 61 gray acrylic electrocoat finish

Accessories
- Touch-up paint
- See Accessories section

Construction
- Enclosure and cover are fabricated from code gauge galvaneal steel for painted or galvanized steel, (see table, page 57)
- Enclosure body has embossed mounting holes on the back
- Available with or without knockouts on the bottom end of enclosures less than 30 inches wide
- Cover is held secure by sliding it under the top end flange and fastening it with plated screws on the bottom end flange, (larger sizes use two studs and wing nuts)

Discount Schedule: A2

Subclass: AS0 & Z60

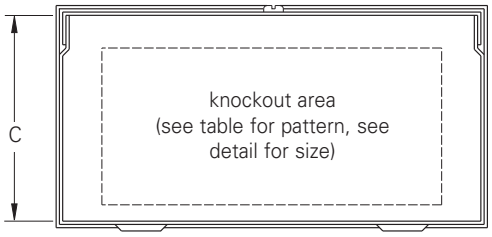

Bottom View

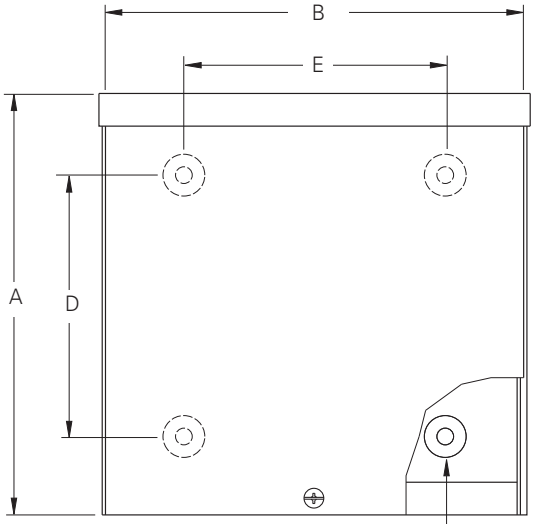

Front View

∅ .25
(6)
mounting hole (4PL)

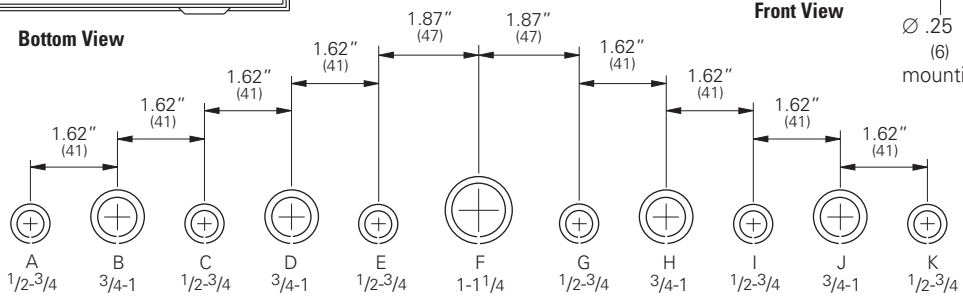

Conduit Sizes

Knockout Detail

Note: See table for applicable knockout pattern.

Notes: We can provide special sizes, finishes and other modifications. Consult the factory for your special requirements.
Dimensions are in inches. Millimeters shown are for reference only. Data subject to change without notice.

Junction Boxes - Type 3R Screw Cover - Painted & Galvanized

Catalog Number **Subclass: AS0 (painted) & Z60 (galvanized)**

Enclosure Catalog Number				Enclosure Size Height x Width x Dept A x B x C		D		E			Knockout Pattern
Painted		Galvanized									
KO	No KO	KO	No KO	in.	mm	in.	mm	in.	mm	Gauge	Bottom
444 RTSC	444 RTSC NK	444 RTSCGV	--	4.00 x 4.00 x 4.00	102 x 102 x 102	1.50	38	1.81	46	16	C D
644 RTSC	644 RTSC NK	--	--	6.00 x 4.00 x 4.00	152 x 102 x 102	3.50	89	1.81	46	16	C D
664 RTSC	664 RTSC NK	664 RTSCGV	664 RTSCGV NK	6.00 x 6.00 x 4.00	152 x 152 x 102	3.50	89	3.81	97	16	C D E
864 RTSC	864 RTSC NK	--	--	8.00 x 6.00 x 4.00	203 x 152 x 102	5.50	140	3.81	97	16	C D E
884 RTSC	884 RTSC NK	884 RTSCGV	884 RTSCGV NK	8.00 x 8.00 x 4.00	203 x 203 x 102	5.50	140	5.81	148	16	G H I J
1084 RTSC	1084 RTSC NK	--	--	10.00 x 8.00 x 4.00	254 x 203 x 102	7.50	191	5.81	148	16	G H I J
10104 RTSC	10104 RTSC NK	10104 RTSCGV	10104 RTSCGV NK	10.00 x 10.00 x 4.00	254 x 254 x 102	7.50	191	7.81	198	16	D E F G H
1284 RTSC	1284 RTSC NK	--	--	12.00 x 8.00 x 4.00	305 x 203 x 102	9.50	241	5.81	148	16	G H I J
12104 RTSC	12104 RTSC NK	--	--	12.00 x 10.00 x 4.00	305 x 254 x 102	9.50	241	7.81	198	16	D E F G H
12124 RTSC	12124 RTSC NK	12124 RTSCGV	12124 RTSCGV NK	12.00 x 12.00 x 4.00	305 x 305 x 102	9.50	241	9.81	249	16	D E F G H
15124 RTSC	--	--	--	15.00 x 12.00 x 4.00	381 x 305 x 102	12.50	318	9.81	249	16	D E F G H
16124 RTSC	16124 RTSC NK	--	--	16.00 x 12.00 x 4.00	406 x 305 x 102	13.50	343	9.81	249	16	D E F G H
16164 RTSC	16164 RTSC NK	--	--	16.00 x 16.00 x 4.00	406 x 406 x 102	13.50	343	13.81	351	16	C D E F G H I
18124 RTSC	--	--	--	18.00 x 12.00 x 4.00	457 x 305 x 102	15.50	394	9.81	249	16	D E F G H
18184 RTSC	18184 RTSC NK	--	--	18.00 x 18.00 x 4.00	457 x 457 x 102	15.50	394	15.81	402	16	B C D E F G H I J
24244 RTSC	24244 RTSC NK	--	--	24.00 x 24.00 x 4.00	610 x 610 x 102	21.50	546	21.56	548	14	B C D E F G H I J
666 RTSC	666 RTSC NK	666 RTSCGV	666 RTSCGV NK	6.00 x 6.00 x 6.00	152 x 152 x 152	3.50	89	3.81	97	16	C D E
866 RTSC	866 RTSC NK	--	--	8.00 x 6.00 x 6.00	203 x 152 x 152	5.50	140	3.81	97	16	C D E
886 RTSC	886 RTSC NK	886 RTSCGV	886 RTSCGV NK	8.00 x 8.00 x 6.00	203 x 203 x 152	5.50	140	5.81	148	16	G H I J
1086 RTSC	1086 RTSC NK	--	--	10.00 x 8.00 x 6.00	254 x 203 x 152	7.50	191	5.81	148	16	G H I J
10106 RTSC	10106 RTSC NK	10106 RTSCGV	10106 RTSCGV NK	10.00 x 10.00 x 6.00	254 x 254 x 152	7.50	191	7.81	198	16	D E F G H
1286 RTSC	--	--	--	12.00 x 8.00 x 6.00	305 x 203 x 152	9.50	241	5.81	148	16	G H I J
12106 RTSC	12106 RTSC NK	--	--	12.00 x 10.00 x 6.00	305 x 254 x 152	9.50	241	7.81	198	16	D E F G H
12126 RTSC	12126 RTSC NK	12126 RTSCGV	12126 RTSCGV NK	12.00 x 12.00 x 6.00	305 x 305 x 152	9.50	241	9.81	249	16	D E F G H
16126 RTSC	16126 RTSC NK	--	--	16.00 x 12.00 x 6.00	406 x 305 x 152	13.50	343	9.81	249	16	D E F G H
16166 RTSC	16166 RTSC NK	--	--	16.00 x 16.00 x 6.00	406 x 406 x 152	13.50	343	13.81	351	16	C D E F G H I
18126 RTSC	18126 RTSC NK	--	18126 RTSCGV NK	18.00 x 12.00 x 6.00	457 x 305 x 152	15.50	394	9.81	249	16	D E F G H
18186 RTSC	18186 RTSC NK	18186 RTSCGV	18186 RTSCGV NK	18.00 x 18.00 x 6.00	457 x 457 x 152	15.50	394	15.81	402	16	B C D E F G H I J
24126 RTSC	24126 RTSC NK	--	--	24.00 x 12.00 x 6.00	610 x 305 x 152	21.50	546	9.81	249	16	D E F G H
24186 RTSC	24186 RTSC NK	--	--	24.00 x 18.00 x 6.00	610 x 457 x 152	21.50	546	15.81	402	16	B C D E F G H I J
24246 RTSC	24246 RTSC NK	--	24246 RTSCGV NK	24.00 x 24.00 x 6.00	610 x 610 x 152	21.50	546	21.56	548	14	B C D E F G H I J
--	36366 RTSC NK	--	--	36.00 x 36.00 x 6.00	914 x 914 x 152	33.50	851	33.56	852	12	--
10108 RTSC	10108 RTSC NK	--	10108 RTSCGV NK	10.00 x 10.00 x 8.00	254 x 254 x 203	7.50	191	7.81	198	16	D E F G H
12128 RTSC	12128 RTSC NK	--	12128 RTSCGV NK	12.00 x 12.00 x 8.00	305 x 305 x 203	9.50	241	9.81	249	16	D E F G H
18128 RTSC	18128 RTSC NK	--	--	18.00 x 12.00 x 8.00	457 x 305 x 203	15.50	394	9.81	249	16	D E F G H
18188 RTSC	18188 RTSC NK	--	18188 RTSCGV NK	18.00 x 18.00 x 8.00	457 x 457 x 203	15.50	394	15.81	402	16	B C D E F G H I J
24168 RTSC	24168 RTSC NK	--	--	24.00 x 16.00 x 8.00	610 x 406 x 203	21.50	546	13.81	351	16	C D E F G H I
24188 RTSC	24188 RTSC NK	--	--	24.00 x 18.00 x 8.00	610 x 457 x 203	21.50	546	15.81	402	16	B C D E F G H I J
24248 RTSC	24248 RTSC NK	--	24248 RTSCGV NK	24.00 x 24.00 x 8.00	610 x 610 x 203	21.50	546	21.56	548	14	B C D E F G H I J
--	36368 RTSC NK	--	--	36.00 x 36.00 x 8.00	914 x 914 x 203	35.50	851	33.56	852	12	--
121210 RTSC	121210 RTSC NK	--	--	12.00 x 12.00 x 10.00	305 x 305 x 254	9.50	241	9.81	249	16	D E F G H
181210 RTSC	--	--	--	18.00 x 12.00 x 10.00	457 x 305 x 254	15.50	394	9.81	249	16	D E F G H
181810 RTSC	181810 RTSC NK	--	--	18.00 x 18.00 x 10.00	457 x 457 x 254	15.50	394	15.81	402	16	B C D E F G H I J
241810 RTSC	241810 RTSC NK	--	--	24.00 x 18.00 x 10.00	610 x 457 x 254	21.50	546	15.81	402	16	B C D E F G H I J
242410 RTSC	242410 RTSC NK	--	242410 RTSCGV NK	24.00 x 24.00 x 10.00	610 x 610 x 254	21.50	546	21.56	548	14	B C D E F G H I J
302410 RTSC	302410 RTSC NK	--	--	30.00 x 24.00 x 10.00	762 x 610 x 254	27.50	699	21.56	548	14	B C D E F G H I J
--	303010 RTSC NK	--	--	30.00 x 30.00 x 10.00	762 x 762 x 254	27.50	699	27.56	700	12	--
242412 RTSC	242412 RTSC NK	--	242412 RTSCGV NK	24.00 x 24.00 x 12.00	610 x 610 x 305	21.50	546	21.56	548	14	B C D E F G H I J
302412 RTSC	302412 RTSC NK	--	--	30.00 x 24.00 x 12.00	762 x 610 x 305	27.50	699	21.56	548	14	B C D E F G H I J
--	303012 RTSC NK	--	--	30.00x x 30.00 x 12.00	762 x 762 x 305	27.50	699	27.56	700	14	--
362412 RTSC	362412 RTSC NK	--	--	36.00 x 24.00 x 12.00	914 x 610 x 305	33.50	851	21.56	548	14	B C D E F G H I J
--	363012 RTSC NK	--	--	36.00 x 30.00 x 12.00	914 x 762 x 305	33.50	851	27.56	700	12	--
--	363612 RTSC NK	--	363612 RTSCGV NK	36.00 x 36.00 x 12.00	914 x 914 x 305	33.50	851	33.56	852	12	--

Notes: Dimensions are in inches. Millimeters shown are for reference only. Data subject to change without notice.

Junction Boxes
Type 3R Hinge Cover
Data Sheet and Catalog Number

Application
- Used as wiring boxes, junction and pull boxes
- Protects against falling rain, sleet and external ice formation

Standards
- UL 50 listed, Type 3R
- CSA C22.2 No. 40 certified, Type 3R
- Conforms to NEMA standard for Type 3R

Finish
- Wash and phosphate undercoat
- ANSI 61 gray acrylic electrocoat finish

Accessories
- Touch-up paint
- See Accessories section

Construction
- Enclosure and door are fabricated from code gauge galvaneal steel, (see table)
- Enclosure body has embossed mounting holes on the back
- Available with or without knockouts on the bottom end of enclosures less than 30 inches wide
- Cover is secured to the top end with galvanized, detachable formed hinges on sizes up to and including 24188
- Cover can be held in the open position by sliding it into notches on body
- Cover has padlock hasp and sealing hole provisions at the bottom

Discount Schedule: A2

Subclass: AT0

Enclosure Catalog Number		Enclosure Size Height x Width x Depth A x B x C		D		E			Knockout Pattern
KO	No KO	in.	mm	in.	mm	in.	mm	Gauge	Bottom
644 RTHC	644 RTHC NK	6.00 x 4.00 x 4.00	152 x 102 x 102	3.00	76	2.00	51	16	C D
664 RTHC	664 RTHC NK	6.00 x 6.00x4.00	152 x 152 x 102	3.00	76	4.00	102	16	C D E
864 RTHC	864 RTHC NK	8.00 x 6.00x4.00	203 x 152 x 102	5.00	127	4.00	102	16	C D E
884 RTHC	884 RTHC NK	8.00 x 8.00x4.00	203 x 203 x 102	5.00	127	5.00	127	16	G H I J
10104 RTHC	10104 RTHC NK	10.00x10.00x4.00	254 x 254 x 102	7.00	178	6.50	165	16	D E F G H
12124 RTHC	12124 RTHC NK	12.00x12.00x4.00	305 x 305 x 102	9.00	229	8.50	216	16	D E F G H
1286 RTHC	1286 RTHC NK	12.00x8.00x6.00	305 x 203 x 152	9.00	229	5.00	127	16	G H I J
12106 RTHC	12106 RTHC NK	12.00x10.00x6.00	305 x 254 x 152	9.00	229	6.50	165	16	D E F G H
12126 RTHC	12126 RTHC NK	12.00x12.00x6.00	305 x 305 x 152	9.00	229	8.50	216	16	D E F G H
18126 RTHC	18126 RTHC NK	18.00x12.00x6.00	457 x 305 x 152	15.00	381	8.50	216	16	D E F G H
12128 RTHC	12128 RTHC NK	12.00x12.00x8.00	305 x 305 x 203	9.00	229	8.50	216	16	D E F G H
18188 RTHC	18188 RTHC NK	18.00x18.00x8.00	457 x 457 x 203	15.00	381	14.50	368	16	B C D E F G H I J
24188 RTHC	24188 RTHC NK	24.00x18.00x8.00	610 x 457 x 203	21.00	533	14.50	368	16	B C D E F G H I J
24248 RTHC	24248 RTHC NK	24.00 x 24.00 x8 .00	610 x 610 x 203	21.00	533	19.50	495	14	B C D E F G H I J
242410 RTHC	242410 RTHC NK	24.00 x 24.00 x 10.00	610 x 610 x 254	21.00	533	20.00	508	14	B C D E F G H I J
362410 RTHC	362410 RTHC NK	36.00 x 24.00 x 10.00	914 x 610 x 254	33.00	838	20.00	508	14	B C D E F G H I J
-	363012 RTHC NK	36.00 x 30.00 x 12.00	914 x 762 x 305	33.00	838	26.00	508	12	--

Notes: We can provide special sizes, finishes and other modifications. Consult the factory for your special requirements. Dimensions are in inches. Millimeters shown are for reference only. Data subject to change without notice.

Junction Boxes
Type 3R Hinge Cover
Illustration Sheet

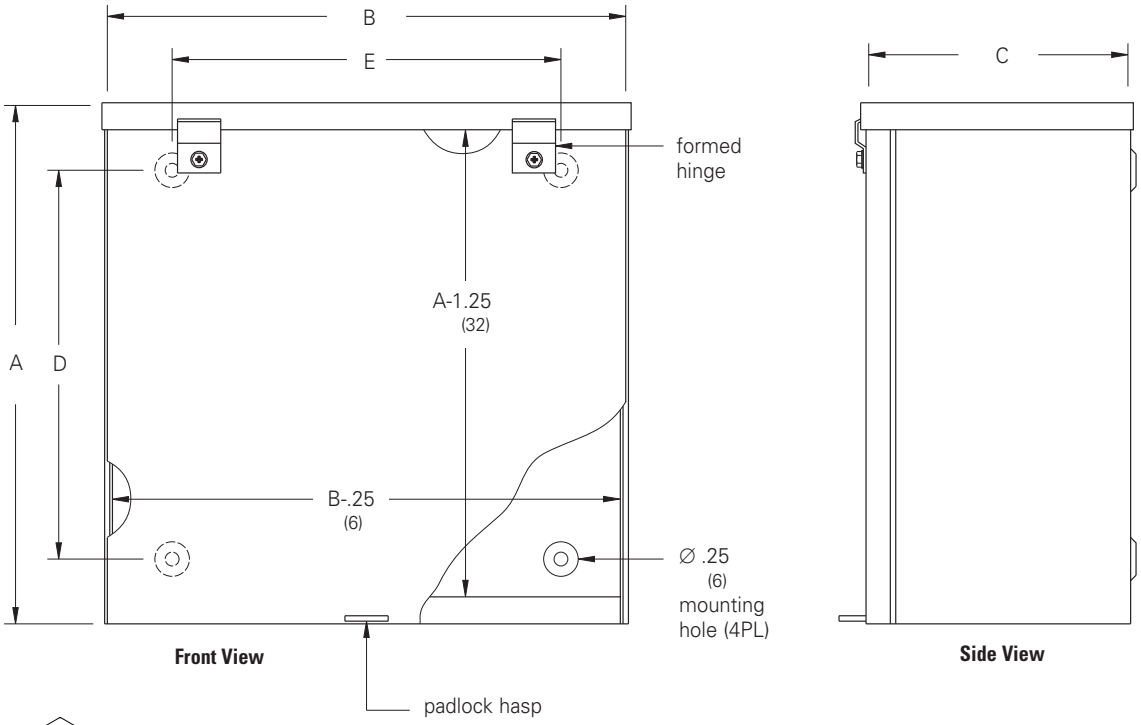

Front View

Side View

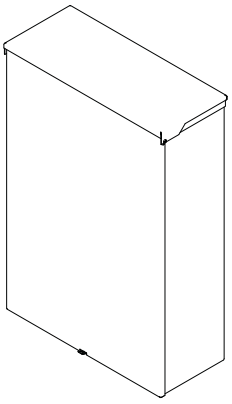

Cover style on 24248
and larger

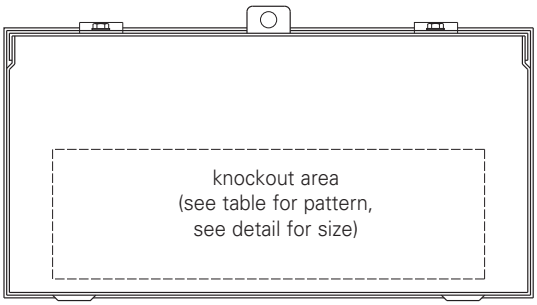

Bottom View

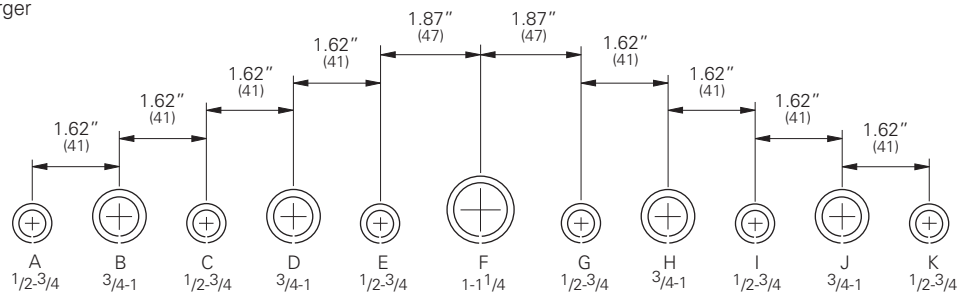

Conduit Sizes

Knockout Detail

Note: See table for applicable knockout pattern.

Notes: Dimensions are in inches. Millimeters shown are for reference only. Data subject to change without notice.

Junction Boxes
Type 3 Screw Cover - Gasketed
Data Sheet

Application
- Used as wiring boxes, junction and pull boxes
- Intended for indoor or outdoor use
- Protects against windblown dust, rain, sleet, external ice formation and dripping non-corrosive liquids

Standards
- UL 508A listed, Type 3 and Type 12
- Conforms to NEMA standard for Type 3 and Type 12

Finish
- Bright galvanized finish
- Zinc-rich coating over all external welds

Accessories
- Ground lug kit
- See Accessories section

Construction
- Enclosure and cover are fabricated from galvanized steel, (see table, page 61)
- All continuous welded seams are finished smooth
- Enclosure standard without knockouts
- Cover is attached with gasketed screws
- Cover has a fixed, oil and water resistant gasket
- #10-32 weldnut is furnished for optional ground lug kit
- Ground screw provided

Discount Schedule: A2

Subclass: AR0

Notes: We can provide special sizes, finishes and other modifications. Consult the factory for your special requirements.

Junction Boxes
Type 3 Screw Cover - Gasketed
Illustration Sheet and Catalog Number

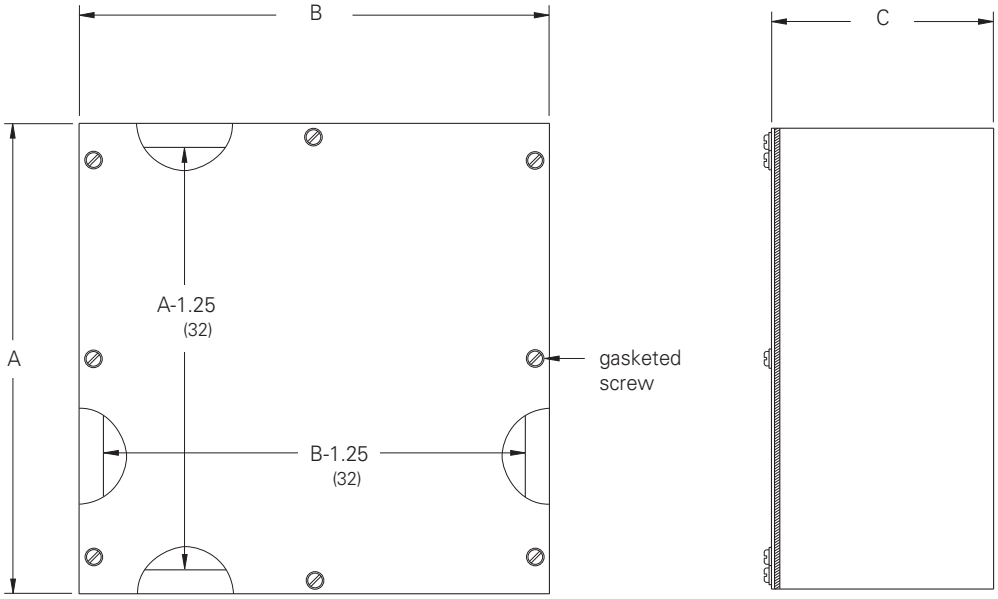

Front View

Side View

Enclosure Catalog Number	Enclosure Size Height x Width x Depth A x B x C in.	mm	Body Gauge	Cover Gauge
444 SCG	4.00 x 4.00 x 4.00	102 x 102 x 102	14	14
664 SCG	6.00 x 6.00 x 4.00	152 x 152 x 102	14	14
864 SCG	8.00 x 6.00 x 4.00	203 x 152 x 102	14	12
884 SCG	8.00 x 8.00 x 4.00	203 x 203 x 102	14	12
1084 SCG	10.00 x 8.00 x 4.00	254 x 203 x 102	14	12
10104 SCG	10.00 x 10.00 x 4.00	254 x 254 x 102	14	12
12124 SCG	12.00 x 12.00 x 4.00	305 x 305 x 102	14	12
666 SCG	6.00 x 6.00 x 6.00	152 x 152 x 152	14	12
886 SCG	8.00 x 8.00 x 6.00	203 x 203 x 152	14	12
10106 SCG	10.00 x 10.00 x 6.00	254 x 254 x 152	14	12
12106 SCG	12.00 x 10.00 x 6.00	305 x 254 x 152	14	12
12126 SCG	12.00 x 12.00 x 6.00	305 x 305 x 152	14	12
16126 SCG	16.00 x 12.00 x 6.00	406 x 305 x 152	14	12
16166 SCG	16.00 x 16.00 x 6.00	406 x 406 x 152	14	10
18186 SCG	18.00 x 18.00 x 6.00	457 x 457 x 152	14	10
20166 SCG	20.00 x 16.00 x 6.00	508 x 406 x 152	14	10
24246 SCG	24.00 x 24.00 x 6.00	610 x 610 x 152	14	10
12128 SCG	12.00 x 12.00 x 8.00	305 x 305 x 203	14	10
20208 SCG	20.00 x 20.00 x 8.00	508 x 508 x 203	14	10
24208 SCG	24.00 x 20.00 x 8.00	610 x 508 x 203	14	10
24248 SCG	24.00 x 24.00 x 8.00	610 x 610 x 203	14	10
242412 SCG	24.00 x 24.00 x 12.00	610 x 610 x 305	14	10
303012 SCG	30.00 x 30.00 x 12.00	762 x 762 x 305	14	10
363612 SCG	36.00 x 36.00 x 12.00	914 x 914 x 305	14	10

Notes: Dimensions are in inches. Millimeters shown are for reference only. Data subject to change without notice.

Junction Boxes
Type 3 Weatherproof Screw Cover
Data Sheet

Application
- Used as wiring boxes, junction and pull boxes
- Protects against windblown dust, rain, sleet and external ice formation

Standards
- UL 50 listed, Type 3 and Type 12, (unless noted)
- CSA C22.2 No. 40 certified, Type 3 and Type 12
- Conforms to NEMA standard for Type 3 and Type 12

Finish
- Wash and phosphate undercoat
- ANSI 61 gray polyester powder finish

Accessories
- Ground lug kit
- Touch-up paint
- See Accessories section

Construction
- Enclosure and door are fabricated from steel, (see table, page 63)
- All continuous welded seams are finished smooth
- Enclosure standard without knockouts
- Cover is attached with gasketed screws
- Cover has flanged sides which secure a fixed, water and ice-resistant gasket
- #10-32 weld stud is furnished for optional ground lug kit
- External mounting feet are provided for secure wall mounting

Discount Schedule: A2

Subclass: AR0

Notes: We can provide special sizes, finishes and other modifications. Consult the factory for your special requirements.

Junction Boxes
Type 3 Weatherproof Screw Cover
Illustration Sheet and Catalog Number

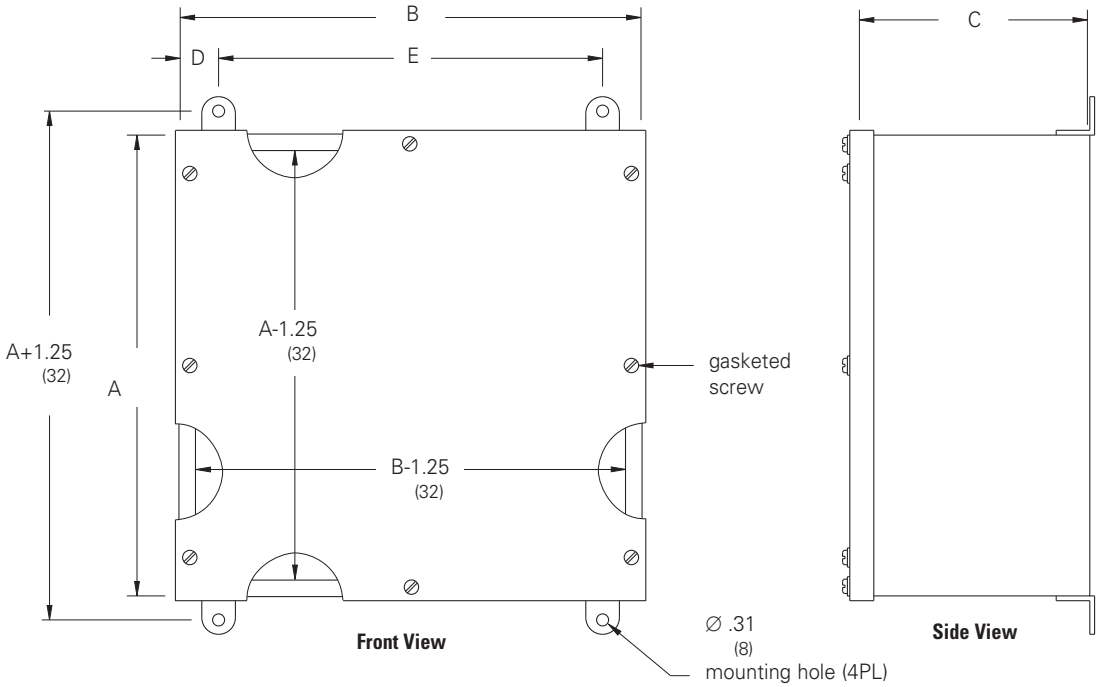

Enclosure Catalog Number	Enclosure Size Height x Width x Depth A x B x C in.	mm	D in.	mm	E in.	mm	Gauge
444 WPSC*	4.00 x 4.00 x 4.00	102 x 102 x 102	2.00	51	-	-	16
644 WPSC*	6.00 x 4.00 x 4.00	152 x 102 x 102	2.00	51	-	-	16
664 WPSC	6.00 x 6.00 x 4.00	152 x 152 x 102	1.00	25	4.00	102	16
864 WPSC	8.00 x 6.00 x 4.00	203 x 152 x 102	1.00	25	4.00	102	16
884 WPSC	8.00 x 8.00 x 4.00	203 x 203 x 102	1.00	25	6.00	152	16
1084 WPSC	10.00 x 8.00 x 4.00	254 x 203 x 102	1.00	25	6.00	152	16
10104 WPSC	10.00 x 10.00 x 4.00	254 x 254 x 102	1.00	25	8.00	203	16
12124 WPSC	12.00 x 12.00 x 4.00	305 x 305 x 102	1.00	25	10.00	254	16
18184 WPSC	18.00 x 18.00 x 4.00	457 x 457 x 102	1.00	25	16.00	406	16
666 WPSC	6.00 x 6.00 x 6.00	152 x 152 x 152	1.00	25	4.00	102	16
886 WPSC	8.00 x 8.00 x 6.00	203 x 203 x 152	1.00	25	6.00	152	16
10106 WPSC	10.00 x 10.00 x 6.00	254 x 254 x 152	1.00	25	8.00	203	16
1286 WPSC	12.00 x 8.00 x 6.00	305 x 203 x 152	1.00	25	6.00	152	16
12126 WPSC	12.00 x 12.00 x 6.00	350 x 305 x 152	1.00	25	10.00	254	16
16126 WPSC	16.00 x 12.00 x 6.00	381 x 305 x 152	1.00	25	10.00	254	16
18126 WPSC	18.00 x 12.00 x 6.00	457 x 305 x 152	1.00	25	10.00	254	16
18186 WPSC	18.00 x 18.00 x 6.00	457 x 457 x 152	1.00	25	16.00	406	16
24186 WPSC	24.00 x 18.00 x 6.00	610 x 457 x 152	1.00	25	16.00	406	16
24246 WPSC	24.00 x 24.00 x 6.00	610 x 610 x 152	1.00	25	22.00	559	14
12128 WPSC	12.00 x 12.00 x 8.00	305 x 305 x 203	1.00	25	10.00	254	16
18188 WPSC	18.00 x 18.00 x 8.00	457 x 457 x 203	1.00	25	16.00	406	16
24248 WPSC	24.00 x 24.00 x 8.00	610 x 610 x 203	1.00	25	22.00	559	14
302410 WPSC	30.00 x 24.00 x 10.00	762 x 610 x 254	1.00	25	22.00	559	14

* UL 508A listed, Type 3 and Type 12

Notes: Dimensions are in inches. Millimeters shown are for reference only. Data subject to change without notice.

Panel Enclosures
Type 1 Small
Data Sheet

Application
- Houses electrical controls and instruments in an environment which does not require oil or dust tight specifications
- Protects against contact with enclosed equipment

Standards
- UL 50 listed, Type 1
- CSA C22.2 No. 40 certified, Type 1
- Conforms to NEMA standard for Type 1

Finish
- Wash and phosphate undercoat
- ANSI 61 gray polyester powder finish

Accessories
- Panels
- Terminal blocks
- Type 1 flush lock
- Touch-up paint
- #8-32 self tapping screw (10168)
- See Accessories section

Construction
- Enclosure and cover are fabricated from (16) gauge steel
- Enclosure body has mounting holes on the back which are accessible with or without the optional panel installed
- Cover is secured to the body with a continuous hinge on one side and flush latch on the opposite side
- Flush latch is designed to operate with either coin or screwdriver
- #10-32 provisions for mounting optional panel
- No knockouts
- Ground stud provided on door

Discount Schedule: C2

Subclass: D70

Notes: We can provide special sizes, finishes and other modifications. Consult the factory for your special requirements.

Panel Enclosures
Type 1 Small
Illustration Sheet and Catalog Number

Enclosure Catalog Number	Enclosure Size Height x Width x Depth A x B x C in.	mm	Panel Catalog Number Solid	Perforated	Panel Size Height x Width in.	mm
664-1	6.00 x 6.00 x 4.00	152 x 152 x 102	N66P	N66PP	4.25 x 4.25	108 x 108
864-1	8.00 x 6.00 x 4.00	203 x 152 x 102	N86P	N86PP	6.25 x 4.25	159 x 108
884-1	8.00 x 8.00 x 4.00	203 x 203 x 102	N88P	N88PP	6.25 x 6.25	159 x 159
1084-1	10.00 x 8.00 x 4.00	254 x 203 x 102	N108P	N108PP	8.25 x 6.25	210 x 159
10104-1	10.00 x 10.00 x 4.00	254 x 254 x 102	N1010P	N1010PP	8.25 x 8.25	210 x 210
12104-1	12.00 x 10.00 x 4.00	305 x 254x 102	N1210P	N1210PP	10.25 x 8.25	260 x 210
12124-1	12.00 x 12.00 x 4.00	305 x 305 x 102	N1212P	N1212PP	10.25 x 10.25	260 x 260
14124-1	14.00 x 12.00 x 4.00	356 x 305 x 102	N1412P	N1412PP	12.25 x 10.25	311 x 260
866-1	8.00 x 6.00 x 6.00	203 x 152 x 152	N86P	N86PP	6.25 x 4.25	159 x 108
886-1	8.00 x 8.00 x 6.00	203 x 203 x 152	N88P	N88PP	6.25 x 6.25	159 x 159
1086-1	10.00 x 8.00 x 6.00	254 x 203 x 152	N108P	N108PP	8.25 x 6.25	210 x 159
10106-1	10.00 x 10.00 x 6.00	254 x 254 x 152	N1010P	N1010PP	8.25 x 8.25	210 x 210
12106-1	12.00 x 10.00 x 6.00	305 x 254 x 152	N1210P	N1210PP	10.25 x 8.25	260 x 210
12126-1	12.00 x 12.00 x 6.00	305 x 305 x 152	N1212P	N1212PP	10.25 x 10.25	260 x 260
14126-1	14.00 x 12.00 x 6.00	356 x 305 x 152	N1412P	N1412PP	12.25 x 10.25	311 x 260
20126-1	20.00 x 12.00 x 6.00	508 x 305 x 152	N2012P	N2012PP	18.25 x 10.25	464 x 260
12128-1	12.00 x 12.00 x 8.00	305 x 305 x 203	N1212P	N1212PP	10.25 x 10.25	260 x 260
14128-1	14.00 x 12.00 x 8.00	356 x 305 x 203	N1412P	N1412PP	12.25 x 10.25	311 x 260

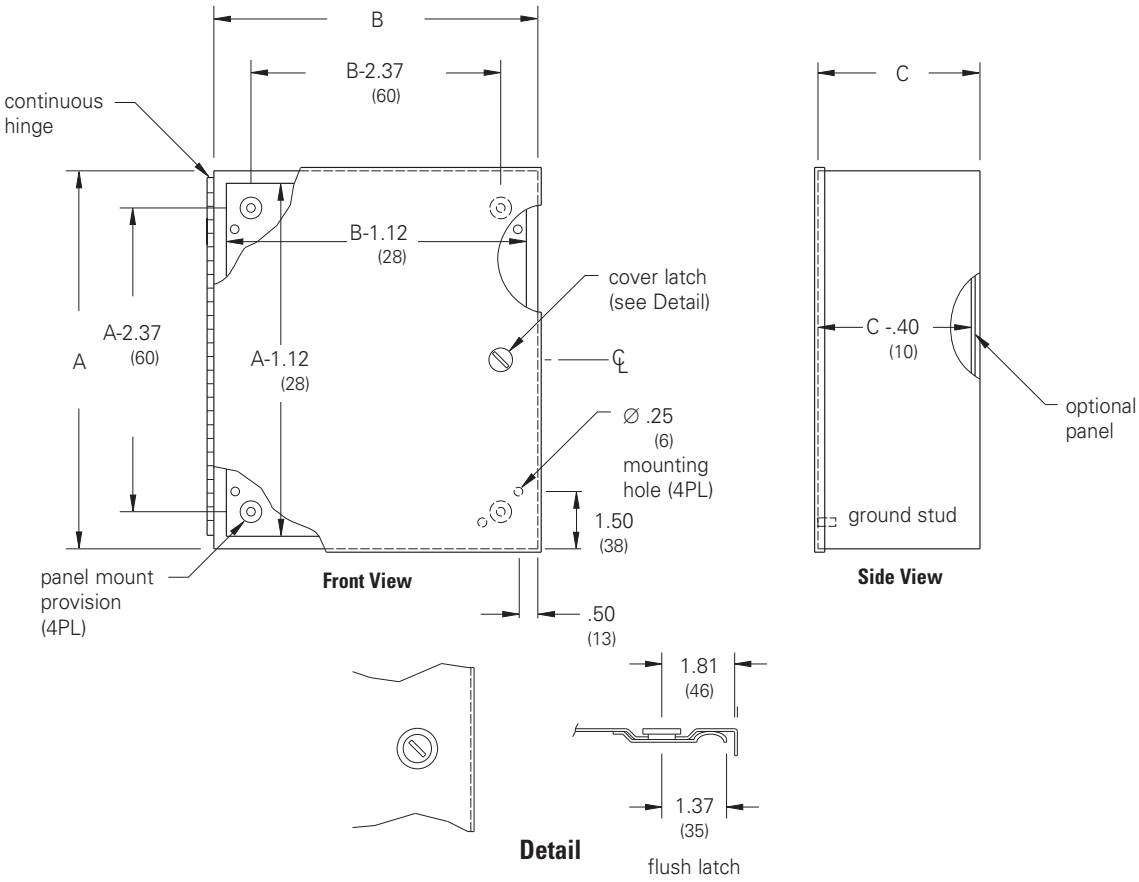

Notes: Dimensions are in inches. Millimeters shown are for reference only. Data subject to change without notice.

Panel Enclosures
Type 1 Medium
Data and Illustration Sheet

Application
- Houses electrical controls and instruments in an environment which does not require oil and dust tight specifications
- Protects against contact with enclosed equipment

Standards
- UL 50 listed, Type 1
- CSA C22.2 No. 40 certified, Type 1
- Conforms to NEMA standard for Type 1

Finish
- Wash and phosphate undercoat
- ANSI 61 gray polyester powder finish
- Optional panels have a white polyester powder finish

Accessories
- Panels
- Terminal blocks
- Type 1 flush lock
- Type 1 security latch inserts
- Touch-up paint
- See Accessories section
- #8-32 self tapping screw (10168)

Construction
- Enclosure and door are fabricated from code gauge steel, (see table, page 67)
- Enclosure body has mounting holes on the back which are accessible with or without the optional panel installed
- Door is secured to the body with a continuous hinge on one side and a flush latch mounted to the opposite side
- Flush latch is designed to operate with either coin or screwdriver
- .375-16 provisions for mounting optional panel
- No knockouts
- Ground stud provided on door

Discount Schedule: C2
Subclass: D80

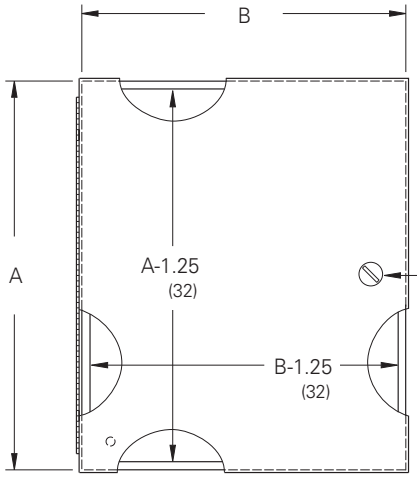

Front View

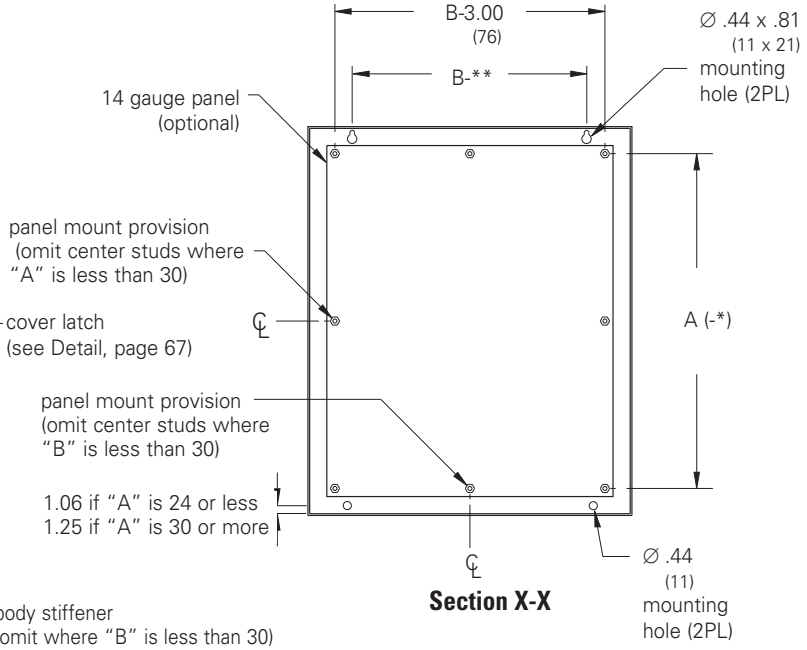

Section X-X

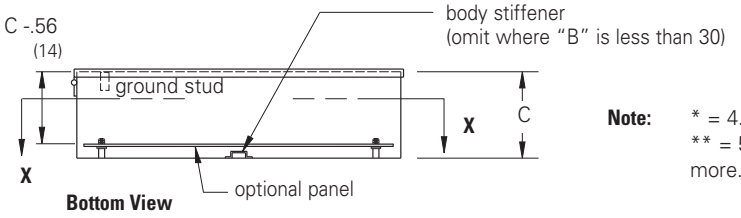

Bottom View

Note: * = 4.50 if "A" is 24 or less * = 5.50 if "A" is 30 or more
** = 5.00 if "B" is 24 or less ** = 7.25 if "B" is 30 or more.

Notes: We can provide special sizes, finishes and other modifications. Consult the factory for your special requirements. Dimensions are in inches. Millimeters shown are for reference only. Data subject to change without notice.

Panel Enclosures
Type 1 Medium
Illustration Sheet and Catalog Number

Enclosure Catalog Number	Enclosure Size Height x Width x Depth in.	mm	Gauge	Panel Catalog Number A x B x C Solid	Perforated	Panel Size Height x Width in.	mm
16126-1	16.00 x 12.00 x 6.62	406 x 305 x 168	16	**AW1612-1P**	**AW1612-1PP**	13.00 x 10.50	330 x 267
16166-1	16.00 x 16.00 x 6.62	406 x 406 x 168	16	**AW1616-1P**	**AW1616-1PP**	13.00 x 14.50	330 x 368
16206-1	16.00 x 20.00 x 6.62	406 x 508 x 168	16	**AW1620-1P**	**AW1620-1PP**	13.00 x 18.50	330 x 470
20166-1	20.00 x 16.00 x 6.62	508 x 406 x 168	16	**AW2016-1P**	**AW2016-1PP**	17.00 x 14.50	432 x 368
20206-1	20.00 x 20.00 x 6.62	508 x 508 x 168	14	**AW2020-1P**	**AW2020-1PP**	17.00 x 18.50	432 x 470
24166-1	24.00 x 16.00 x 6.62	610 x 406 x 168	14	**AW2416-1P**	**AW2416-1PP**	21.00 x 14.50	533 x 368
24206-1	24.00 x 20.00 x 6.62	610 x 508 x 168	14	**AW2420-1P**	**AW2420-1PP**	21.00 x 18.50	533 x 470
24246-1	24.00 x 24.00 x 6.62	610 x 610 x 168	14	**AW2424-1P**	**AW2424-1PP**	21.00 x 22.50	533 x 572
30206-1	30.00 x 20.00 x 6.62	762 x 508 x 168	14	**AW3020-1P**	**AW3020-1PP**	26.00 x 18.50	660 x 470
30246-1	30.00 x 24.00 x 6.62	762 x 610 x 168	14	**AW3024-1P**	**AW3024-1PP**	26.00 x 22.50	660 x 572
36246-1	36.00 x 24.00 x 6.62	914 x 610 x 168	14	**AW3624-1P**	**AW3624-1PP**	32.00 x 22.50	813 x 572
36306-1	36.00 x 30.00 x 6.62	914 x 762 x 168	14	**AW3630-1P**	**AW3630-1PP**	32.00 x 28.50	813 x 724
16128-1	16.00 x 12.00 x 8.62	406x x 305 x 219	16	**AW1612-1P**	**AW1612-1PP**	13.00 x 10.50	330 x 267
20168-1	20.00 x 16.00 x 8.62	508 x 406 x 219	16	**AW2016-1P**	**AW2016-1PP**	17.00 x 14.50	432 x 368
20208-1	20.00 x 20.00 x 8.62	508 x 508 x 219	14	**AW2020-1P**	**AW2020-1PP**	17.00 x 18.50	432 x 470
20248-1	20.00 x 24.00 x 8.62	508 x 610 x 219	14	**AW2024-1P**	**AW2024-1PP**	17.00 x 22.50	432 x 572
24208-1	24.00 x 20.00 x 8.62	610 x 508 x 219	14	**AW2420-1P**	**AW2420-1PP**	21.00 x 18.50	533 x 470
24248-1	24.00 x 24.00 x 8.62	610 x 610 x 219	14	**AW2424-1P**	**AW2424-1PP**	21.00 x 22.50	533 x 572
30208-1	30.00 x 20.00 x 8.62	762 x 508 x 219	14	**AW3020-1P**	**AW3020-1PP**	26.00 x 18.50	660 x 470
30248-1	30.00 x 24.00 x 8.62	762 x 610 x 219	14	**AW3024-1P**	**AW3024-1PP**	26.00 x 22.50	660 x 572
30308-1	30.00 x 30.00 x 8.62	762 x 762 x 219	14	**AW3030-1P**	**AW3030-1PP**	26.00 x 28.50	660 x 724
36248-1	36.00x24.00x8.62	914 x 610 x 219	14	**AW3624-1P**	**AW3624-1PP**	32.00 x 22.50	813 x 572
36308-1	36.00x30.00x8.62	914 x 762 x 219	14	**AW3630-1P**	**AW3630-1PP**	32.00 x 28.50	813 x 724
42248-1	42.00x24.00x8.62	1067 x 610 x 219	14	**AW4224-1P**	**AW4224-1PP**	38.00 x 22.50	965 x 572
242010-1	24.00x20.00x10.62	610 x 508 x 270	14	**AW2420-1P**	**AW2420-1PP**	21.00 x 18.50	533 x 470
302410-1	30.00x24.00x10.62	762 x 610 x 270	14	**AW3024-1P**	**AW3024-1PP**	26.00 x 22.50	660 x 572
242012-1	24.00x20.00x12.62	610 x 508 x 321	14	**AW2420-1P**	**AW2420-1PP**	21.00 x 18.50	533 x 470
242412-1	24.00x24.00x12.62	610 x 610 x 321	14	**AW2424-1P**	**AW2424-1PP**	21.00 x 22.50	533 x 572
302412-1	30.00x24.00x12.62	762 x 610 x 321	14	**AW3024-1P**	**AW3024-1PP**	26.00 x 22.50	660 x 572
363012-1	36.00x30.00x12.62	914 x 762 x 321	14	**AW3630-1P**	**AW3630-1PP**	32.00 x 28.50	813 x 724

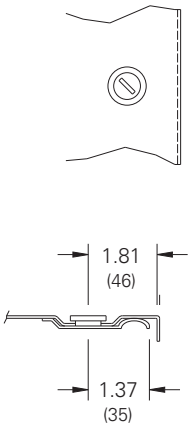

flush latch

Detail

Notes: Dimensions are in inches. Millimeters shown are for reference only. Data subject to change without notice.

Panel Enclosures
Type 1 Large
Data Sheet

Application
- Houses electrical controls and instruments in an environment which does not require oil and dust tight specifications
- Protects against contact with enclosed equipment

Standards
- UL 50 Listed, Type 1
- CSA C22.2 No. 40 certified, Type 1
- Conforms to NEMA Standard for Type 1

Finish
- Wash and phosphate undercoat
- ANSI 61 gray polyester powder finish
- Optional panels have a white polyester powder finish

Accessories
- Panels
- Terminal blocks
- Type 1 flush lock
- Swing panel kits
- Window kits
- Touch-up paint

Construction
- Enclosure and door are fabricated from (14) gauge steel
- Enclosure body has mounting holes on the back which are accessible with or without the optional panel installed
- Door is secured to the body with a heavy-duty continuous hinge on one side and slotted flush latches on the opposite side
- Body has stiffener for extra rigidity
- Slotted flush latch is designed to operate with either a coin or a screwdriver
- .375-16 provisions for mounting optional panels
- No knockouts
- Ground stud provided on door

Discount Schedule: C2

Subclass: D80

Notes: We can provide special sizes, finishes and other modifications. Consult the factory for your special requirements.

Panel Enclosures
Type 1 Large
Illustration Sheet and Catalog Number

Enclosure Catalog Number	Enclosure Size Height x Width x Depth A x B x C in.	mm	Panel Catalog Number	Panel Size Height x Width in.	mm
42309-1	42.00 x 30.00 x 9.25	1067 x 762 x 235	AW4230P	38.87 x 26.87	987 x 682
42369-1	42.00 x 36.00 x 9.25	1067 x 914 x 235	AW4236P	38.87 x 32.87	987 x 835
48369-1	48.00 x 36.00 x 9.25	1219 x 914 x 235	AW4836P	44.87 x 32.87	1140 x 835
483611-1	48.00 x 36.00 x 11.25	1219 x 914 x 286	AW4836P	44.87 x 32.87	1140 x 835
423013-1	42.00 x 30.00 x 13.25	1067 x 762 x 337	AW4230P	38.87 x 26.87	987 x 682
423613-1	42.00 x 36.00 x 13.25	1067 x 914 x 337	AW4236P	38.87 x 32.87	987 x 835
483613-1	48.00 x 36.00 x 13.25	1219 x 914 x 337	AW4836P	44.87 x 32.87	1140 x 835
483617-1	48.00 x 36.00 x 17.25	1219 x 914 x 438	AW4836P	44.87 x 32.87	1140 x 835

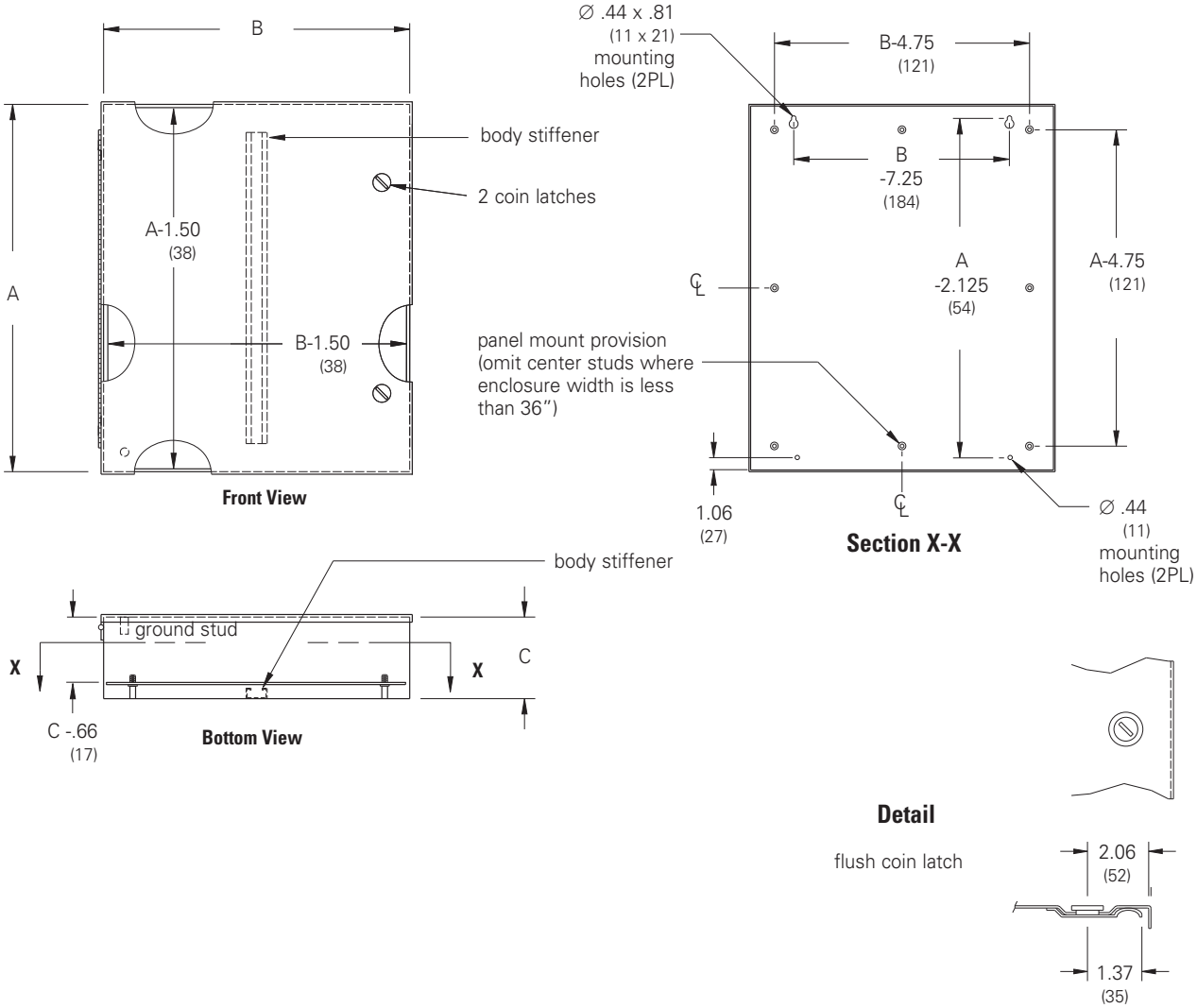

Notes: Dimensions are in inches. Millimeters shown are for reference only. Data subject to change without notice.

Panel Enclosures
Type 1 Locking Hinge Cover With Perforated Panel
Data Sheet and Catalog Number

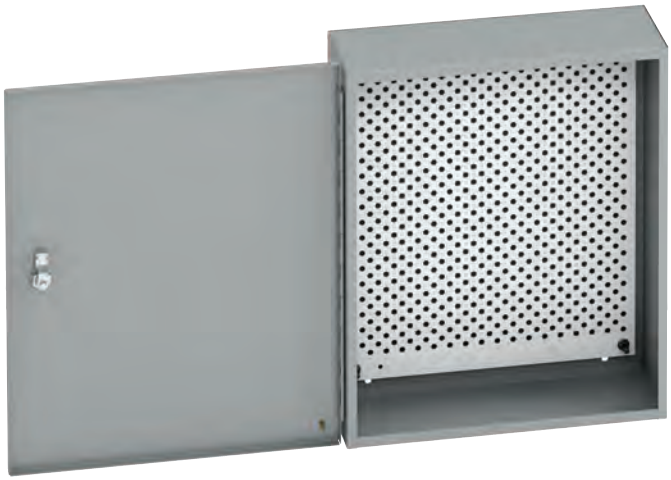

Application
- Houses electrical and electronic controls and instruments in an environment which does not require oil, dust, or water tight specifications
- Protects against contact with enclosed equipment

Standards
- UL 50 listed, Type 1
- CSA C22.2 No. 40 certified, Type 1
- Conforms to NEMA standard for Type 1

Finish
- Wash and phosphate undercoat
- ANSI 61 gray acrylic electro-coat finish

Accessories
- Touch-up paint (84034)
- Self-tapping screws (10168)

Construction
- Covers and bodies are fabricated from code gauge steel (see below)
- Includes panel grounding hardware kit
- Cover has keyed quarter-turn lock, two (2) keys are included
- Includes removable 16 gauge white perforated panel
- Enclosure body has mounting holes on the back which are accessible with or without the panel installed
- Cover is secured to the body with a continuous hinge on one side and a flush latch on the opposite side
- Ground stud provided on door

Discount Schedule: C2
Subclass: D85

Catalog Number	Height x Depth x Length A x B x C		Gauge		Perforated Panel Size	
	in.	mm	in.	mm	in.	mm
12126-1PP	12.00 x 12.00 x 6.00	305 x 305 x 152	16	1.4	10.25 x 10.25	260.3 x 260.3
16126-1PP	16.00 x 12.00 x 6.00	406 x 305 x 152	16	1.4	13.00 x 10.50	260.3 x 260.3
20166-1PP	20.00 x 16.00 x 6.00	508 x 406 x 152	16	1.4	17.00 x 14.50	431.8 x 368.3
24206-1PP	24.00 x 20.00 x 6.00	610 x 508 x 152	14	1.9	21.00 x 18.50	533.4 x 469.9
36246-1PP	36.00 x 24.00 x 6.00	914 x 610 x 152	14	1.9	32.00 x 22.50	812.8 x 571.5
36306-1PP	36.00 x 30.00 x 6.00	914 x 762 x 152	14	1.9	32.00 x 28.50	812.8 x 723.9

Notes: We can provide special sizes, finishes and other modifications. Consult the factory for your special requirements. Dimensions are in inches. Millimeters shown are for reference only. Data subject to change without notice.

Panel Enclosures
Type 1 Locking Hinge Cover With Perforated Panel
Illustration Sheet

Drawings for 12126-1PP

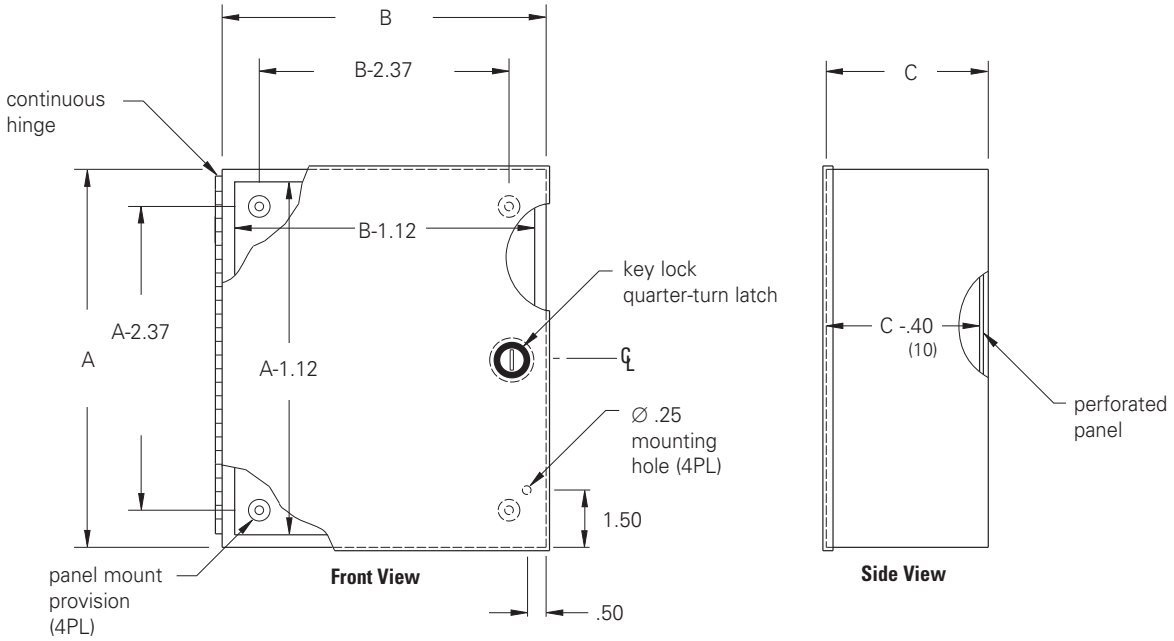

Drawings for 16126-1PP, 20166-1PP, 24206-1PP, 36246-1PP, 36306-1PP

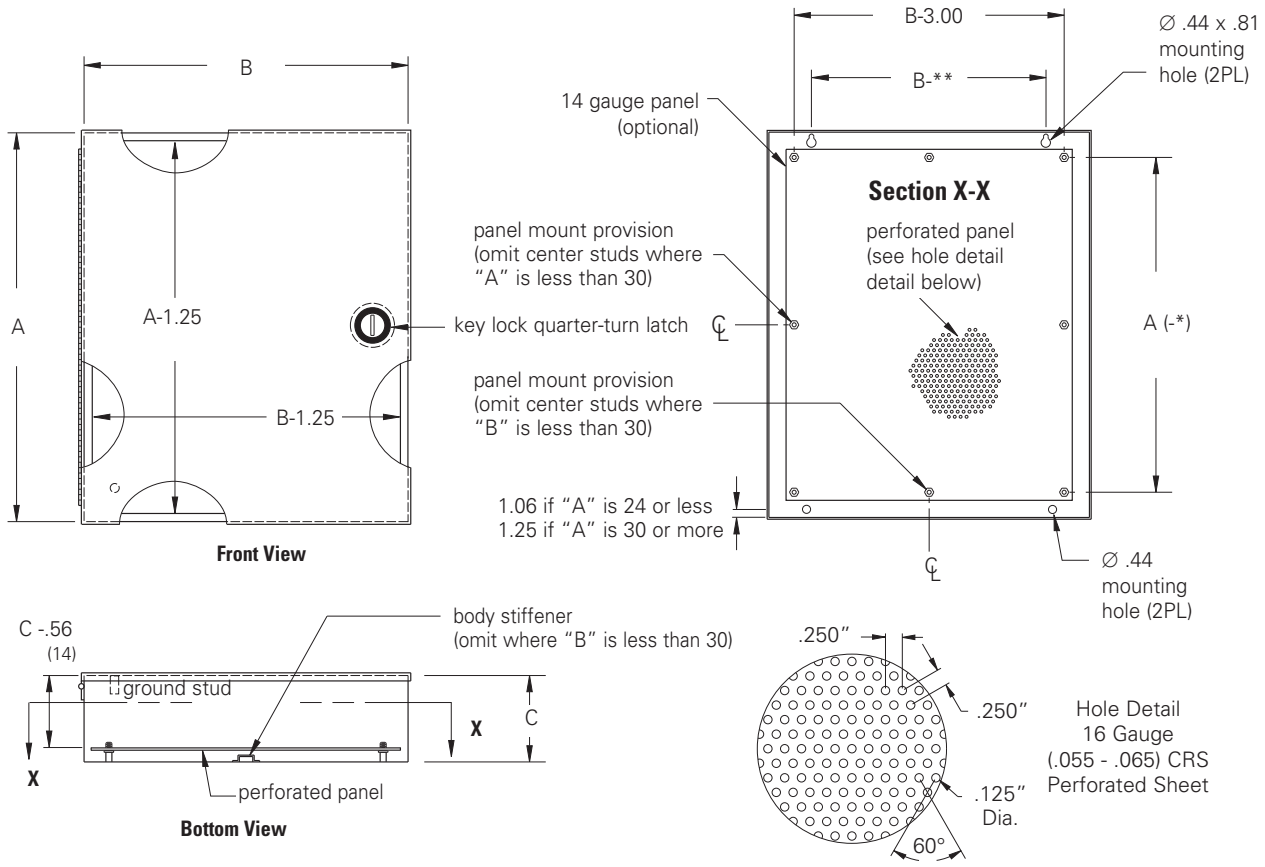

Note: * = 4.50 if "A" is 24 or less * = 5.50 if "A" is 30 or more
** = 5.00 if "B" is 24 or less ** = 7.25 if "B" is 30 or more.

Notes: Dimensions are in inches. Millimeters shown are for reference only. Data subject to change without notice.

Panel Enclosures
Type 3R Small Continuous Hinge Cover
Data Sheet and Catalog Number

Application
- Used as wiring boxes, junction and pull boxes
- Protects against falling rain, sleet and external ice formation

Standards
- UL 50 listed, Type 3R
- CSA C22.2 No. 40 certified, Type 3R
- Conforms to NEMA standard for Type 3R

Finish
- Wash and phosphate undercoat
- ANSI 61 gray polyester powder finish

Accessories
- Panels
- Touch-up paint
- #10-32 self tapping screw (10168)
- See Accessories section

Construction
- Enclosure and cover are fabricated from (16) gauge galvaneal steel
- Knockouts are furnished on bottom end
- Cover is secured to the body with a continuous hinge and stainless steel pin on one side and a padlock draw pull catch on the opposite side
- #10-32 weldnuts are furnished for mounting optional panel
- External mounting feet are provided for secure wall mounting
- Ground stud provided on door

Discount Schedule: A2
Subclass: AU0

Enclosure	Enclosure Size Height x Width x Depth A x B x C		Knockout Pattern	Panel Catalog Number		Panel Height x Width	
Catalog Number	in.	mm	Bottom	Solid	Perforated	in.	mm
644 RHC	6.00 x 4.00 x 4.00	152 x 102 x 102	I J	N64P	N64PP	4.25 x 2.25	108 x 57
664 RHC	6.00 x 6.00 x 4.00	152 x 152 x 102	I J K	N66P	N66PP	4.25 x 4.25	108 x 108
864 RHC	8.00 x 6.00 x 4.00	203 x 152 x 102	I J K	N86P	N86PP	6.25 x 4.25	159 x 108
884 RHC	8.00 x 8.00 x 4.00	203 x 203 x 102	I J K L	N88P	N88PP	6.25 x 6.25	159 x 159
886 RHC	8.00 x 8.00 x 6.00	203 x 203 x 152	I J K L	N88P	N88PP	6.25 x 6.25	159 x 159
1086 RHC	10.00 x 8.00 x 6.00	254 x 203 x 152	I J K L	N108P	N108PP	8.25 x 6.25	210 x 159
12106 RHC	12.00 x 10.00 x 6.00	305 x 254 x 152	H I J K L	N1210P	N1210PP	10.25 x 8.25	260 x 210
12126 RHC	12.00 x 12.00 x 6.00	305 x 305 x 152	H I J K L	N1212P	N1212PP	10.25 x 10.25	260 x 260
121210 RHC	12.00 x 12.00 x 10.00	305 x 305 x 254	H I J K L	N1212P	N1212PP	10.25 x 10.25	260 x 260

Notes: We can provide special sizes, finishes and other modifications. Consult the factory for your special requirements.

Panel Enclosures
Type 3R Small Continuous Hinge Cover
Illustration Sheet

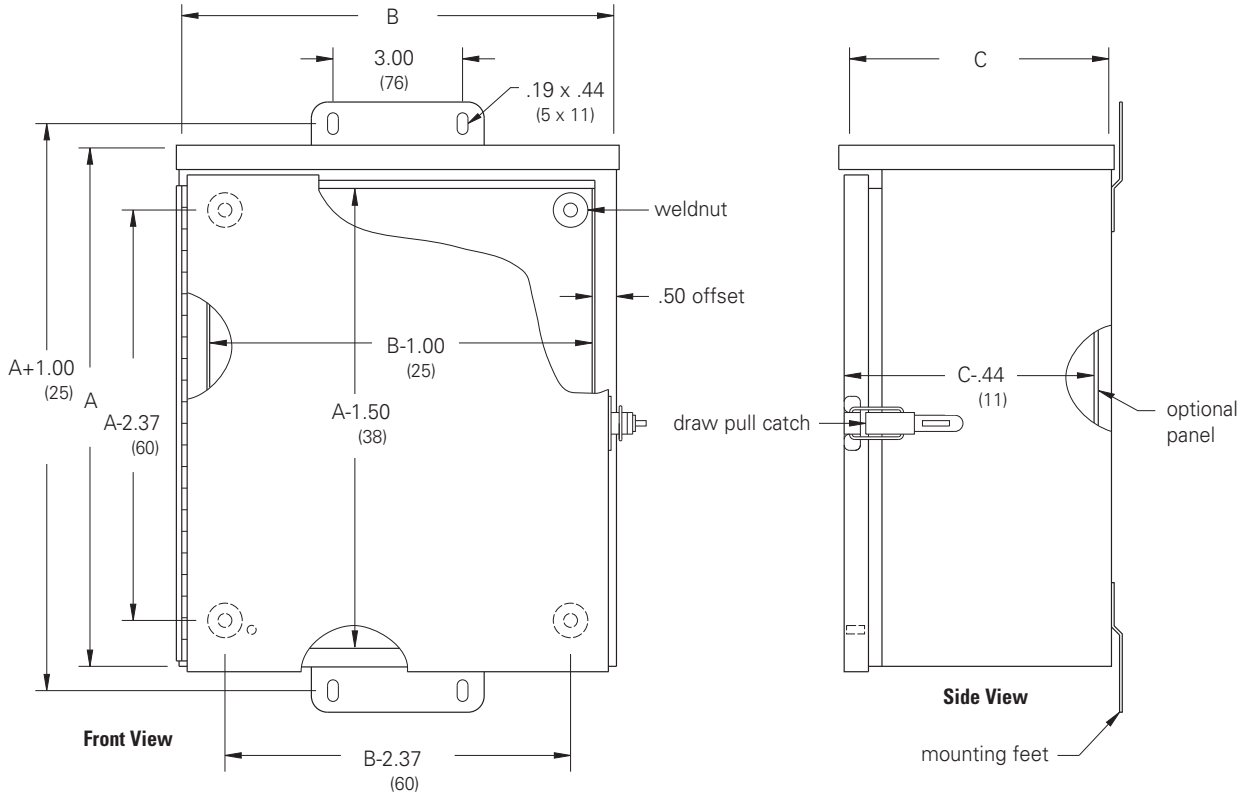

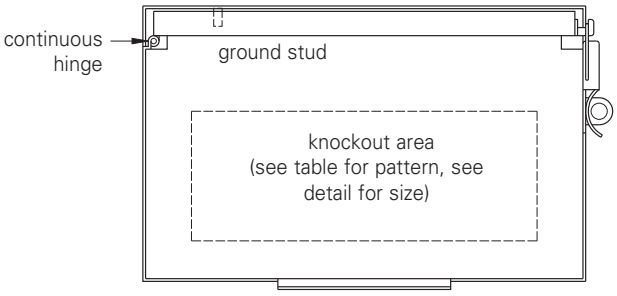

Bottom View

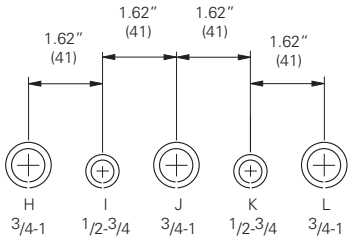

Conduit Sizes

Knockout Detail

Note: See table for applicable knockout pattern.

Notes: Dimensions are in inches. Millimeters shown are for reference only. Data subject to change without notice.

Panel Enclosures
Type 3R Large Continuous Hinge Cover
Data Sheet and Catalog Number

Application
- Used as wiring boxes, junction and pull boxes
- Protects against falling rain, sleet and external ice formation

Standards
- UL 50 listed, Type 3R
- CSA C22.2 No. 40 certified, Type 3R
- Conforms to NEMA standard for Type 3R

Construction
- Enclosure and door are fabricated from code gauge galvaneal steel, (see below)
- Enclosure standard without knockouts
- Door is secured to the body with a continuous hinge and stainless steel pin on one side and captive screws on the opposite side
- Door has padlock hasp with sealing hole provision
- .375-16 collar studs are furnished for mounting optional panel
- External mounting feet are provided for secure wall mounting
- Ground stud provided on door

Finish
- Wash and phosphate undercoat
- ANSI 61 gray polyester powder finish

Accessories
- Panels
- Touch-up paint
- See Accessories section

Discount Schedule: A2

Subclass: AU0

Enclosure	Enclosure Size Height x Width x Depth A x B x C		D			Panel	Panel Size Height x Width	
Catalog Number	in.	mm	in.	mm	Gauge	Catalog Number	in.	mm
16126RHC	16.00 x 12.00 x 6.00	406 x 305 x 152	5.00	127	16	N1612P	13.00 x 9.00	330 x 229
16166RHC	16.00 x 16.00 x 6.00	406 x 406 x 152	9.00	229	16	N1616P	13.00 x 13.00	330 x 330
18186RHC	18.00 x 18.00 x 6.00	457 x 457 x 152	13.00	330	16	N1818P	15.00 x 15.00	381 x 381
181810RHC	18.00 x 18.00 x 10.00	457 x 457 x 254	13.00	330	16	N1818P	15.00 x 15.00	381 x 381
20166RHC	20.00 x 16.00 x 6.00	508 x 406 x 152	9.00	229	16	N2016P	17.00 x 13.00	432 x 330
20208RHC	20.00 x 20.00 x 8.00	508 x 508 x 203	13.00	330	16	N2020P	17.00 x 17.00	432 x 432
24208RHC	24.00 x 20.00 x 8.00	610 x 508 x 203	13.00	330	16	N2420P	20.87 x 16.87	530 x 428
24248RHC	24.00 x 24.00 x 8.00	610 x 610 x 203	17.00	432	14	N2424P	20.87 x 20.87	530 x 530
242410RHC	24.00 x 24.00 x 10.00	610 x 610 x 254	17.00	432	14	N2424P	20.87 x 20.87	530 x 530
30248RHC	30.00 x 24.00 x 8.00	762 x 610 x 203	17.00	432	14	N3024P	26.87 x 20.87	682 x 530
302410RHC	30.00 x 24.00 x 10.00	762 x 610 x 254	17.00	432	14	N3024P	26.87 x 20.87	682 x 530
30308RHC	30.00 x 30.00 x 8.00	762 x 762 x 203	17.00	432	14	N3030P	26.87 x 26.87	682 x 682
303012RHC	30.00 x 30.00 x 12.00	762 x 762 x 305	27.00	432	14	N3030P	26.87 x 26.87	682 x 682
303016RHC	30.00 x 30.00 x 16.00	762 x 762 x 406	27.00	432	14	N3030P	26.87 x 26.87	682 x 682
362412RHC	36.00 x 24.00 x 12.00	914 x 610 x 305	17.00	432	14	N3624P	32.87 x 20.87	835 x 530
363012RHC	36.00 x 30.00 x 12.00	914 x 762 x 305	27.00	432	14	N3630P	32.87 x 26.87	835 x 682
363610RHC	36.00 x 36.00 x 10.00	914 x 914 x 254	27.00	432	14	N3636P	32.87 x 32.87	835 x 835
363612RHC	36.00 x 36.00 x 12.00	914 x 914 x 305	27.00	432	14	N3636P	32.87 x 32.87	835 x 835
423012RHC	42.00 x 30.00 x 12.00	1067 x 762 x 305	27.00	432	14	N4230P	38.87 x 26.87	987 x 682
423612RHC	42.00 x 36.00 x 12.00	1067 x 914 x 305	27.00	432	14	N4236P	38.87 x 32.87	987 x 835
483612RHC	48.00 x 36.00 x 12.00	1219 x 914 x 305	27.00	432	14	N4836P	44.87 x 32.87	1140 x 835
483616RHC	48.00 x 36.00 x 16.00	1219 x 914 x 406	27.00	432	14	N4836P	44.87 x 32.87	1140 x 835
603612RHC	60.00 x 36.00 x 12.00	1524 x 914 x 305	27.00	432	14	N6036P	56.87 x 32.87	1444 x 835

Notes: We can provide special sizes, finishes and other modifications. Consult the factory for your special requirements. Dimensions are in inches. Millimeters shown are for reference only. Data subject to change without notice.

Panel Enclosures
Type 3R Large Continuous Hinge Cover
Illustration Sheet

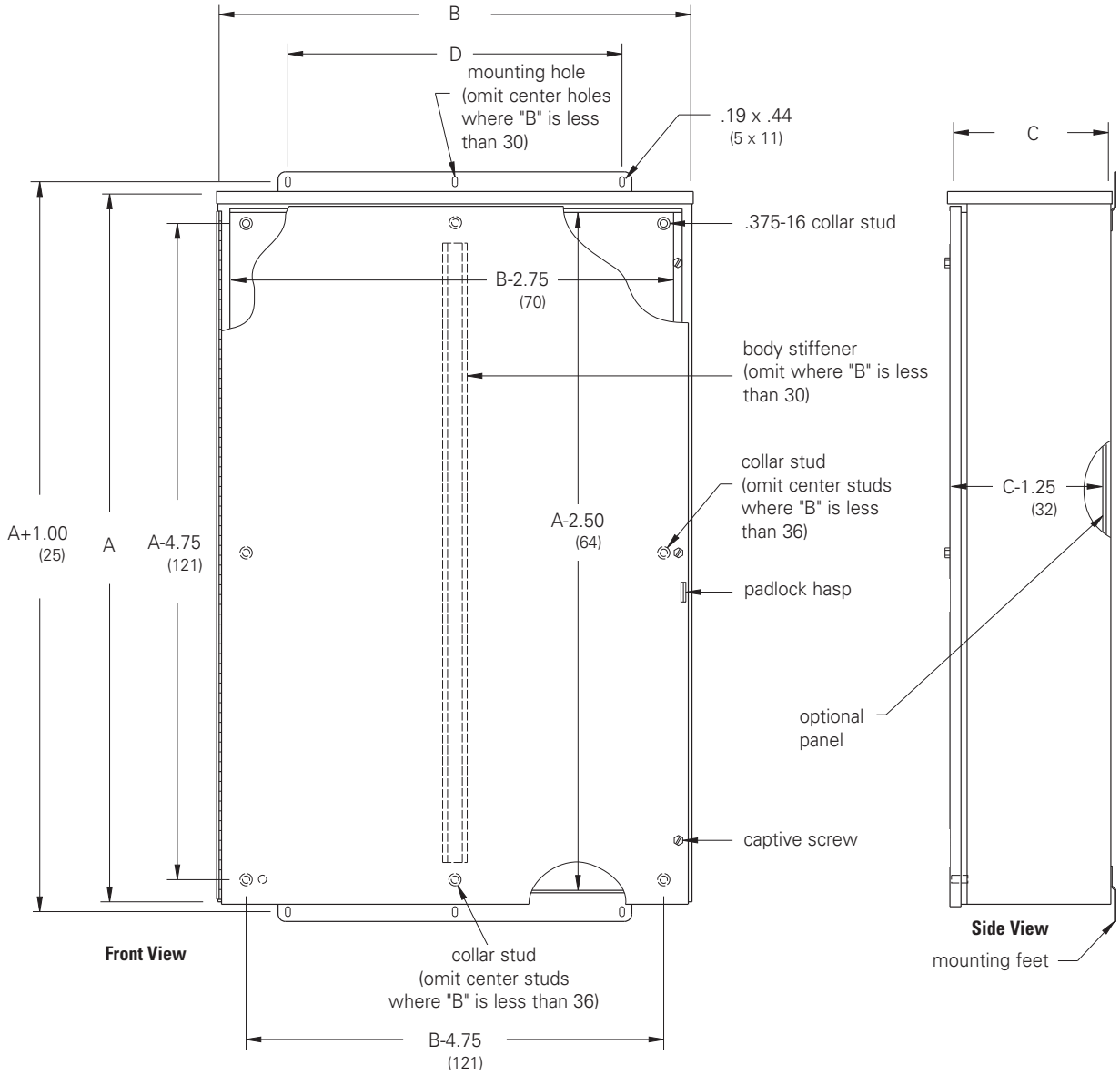

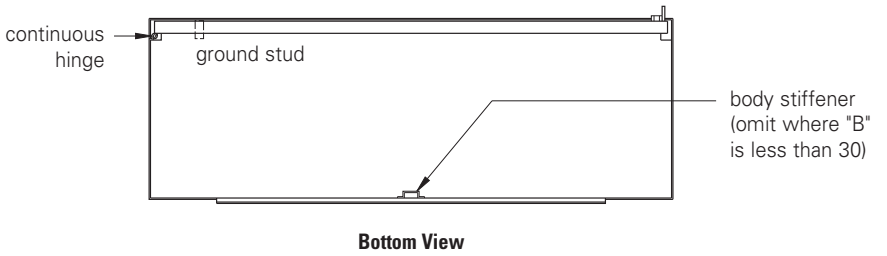

Notes: Dimensions are in inches. Millimeters shown are for reference only. Data subject to change without notice.

Panel Enclosures
Type 3R Double-Door Enclosures
Data Sheet and Catalog Number

Application
- Used as wiring boxes, junction and pull boxes
- Protects against falling rain, sleet and external ice formation

Standards
- UL 50 listed, Type 3R
- CSA C22.2 No. 40 certified, Type 3R
- Conforms to NEMA standard for Type 3R

Finish
- Wash and phosphate undercoat
- ANSI 61 gray polyester powder finish

Accessories
- Panels
- Type 3R door handle
- Touch-up paint
- See Accessories section

Construction
- Enclosure and door are fabricated from (12) gauge steel
- Removable center post for complete front access
- Doors are secured to the body with a heavy-duty continuous hinge and stainless steel hinge pin with center locating 3-point padlocking handle mechanism which closes the right side door over the left
- .375-16 collar studs are furnished for mounting optional panel
- External mounting feet are provided for secure wall mounting
- No knockouts
- Ground stud provided on each door

Discount Schedule: A2
Subclass: AU0

Enclosure	Enclosure Size Height x Width x Depth A x B x C		Panel	Panel Size Height x Width	
Catalog Number	in.	mm	Catalog Number	in.	mm
304212DRHC	30.00 x 42.00 x 12.00	762 x 1067 x 305	N4230P	26.87 x 38.87	682 x 987
364812DRHC	36.00 x48.00 x 12.00	914 x 1219 x 305	N4836P	32.87 x 44.87	835 x 1140
303616DRHC	30.00 x 36.00 x 16.00	762 x 914 x 406	N3630P	26.87 x 32.87	682 x 835
364216DRHC	36.00 x 42.00 x 16.00	914 x 1067 x 406	N4236P	32.87 x 38.87	835 x 987

Notes: We can provide special sizes, finishes and other modifications. Consult the factory for your special requirements. Dimensions are in inches. Millimeters shown are for reference only. Data subject to change without notice.

Panel Enclosures
Type 3R Double-Door Enclosures
Illustration Sheet

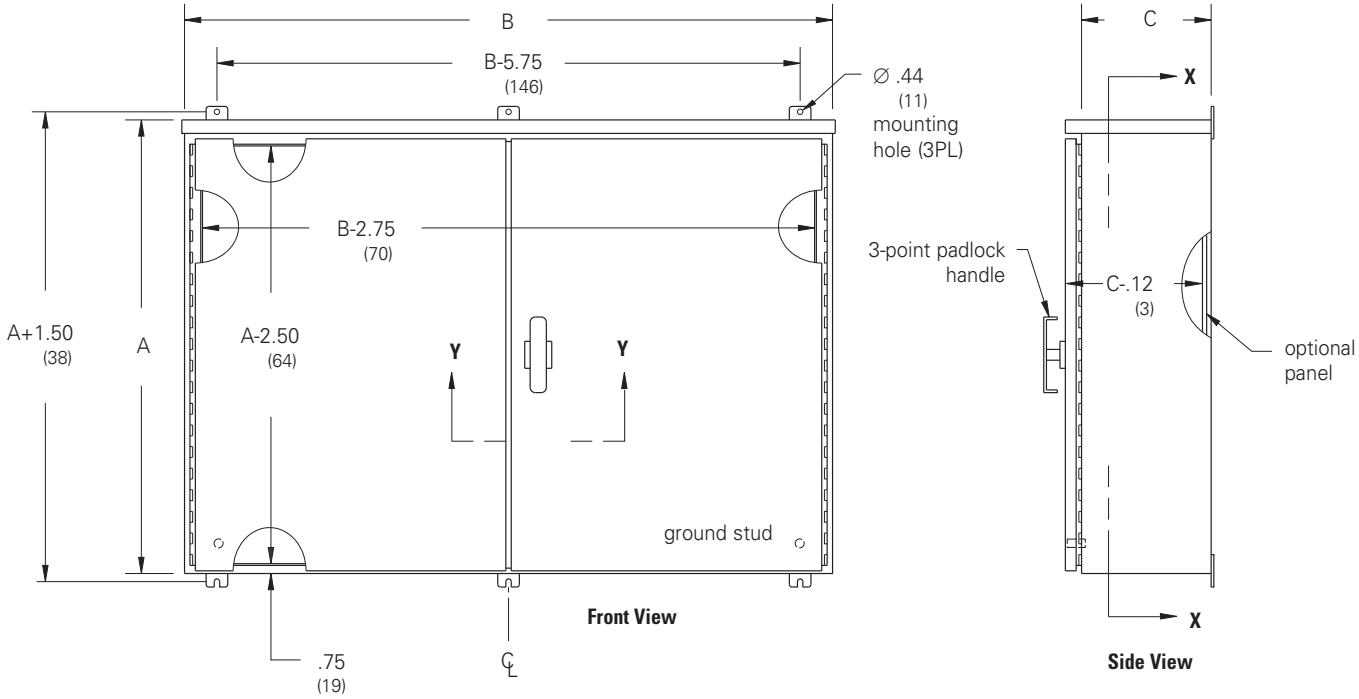

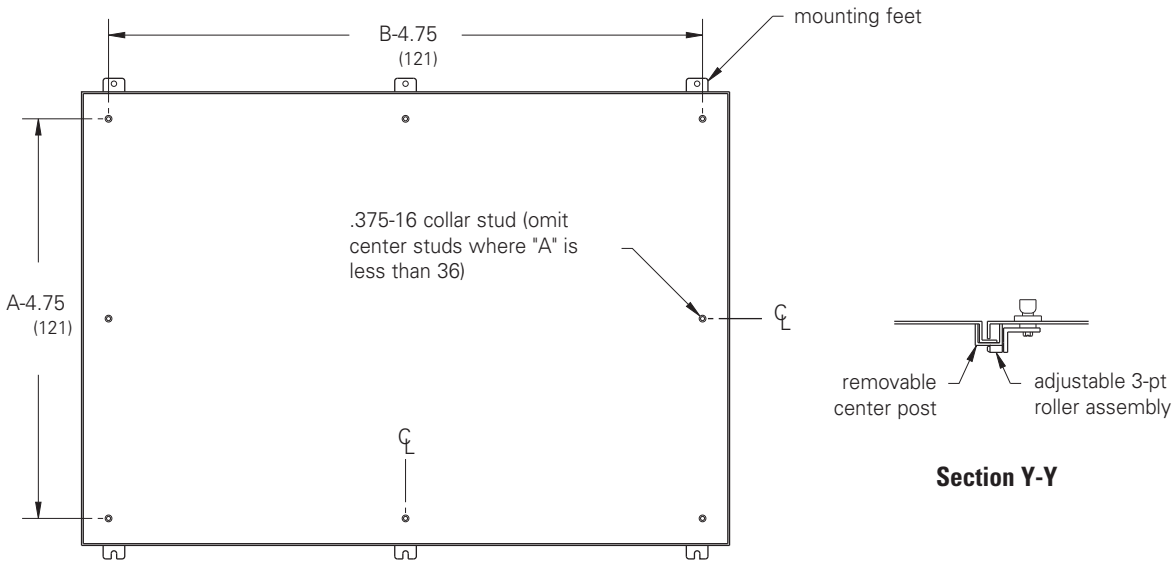

Notes: Dimensions are in inches. Millimeters shown are for reference only. Data subject to change without notice.

Utility Cabinets
Type 1 Telephone Cabinets
Data Sheet

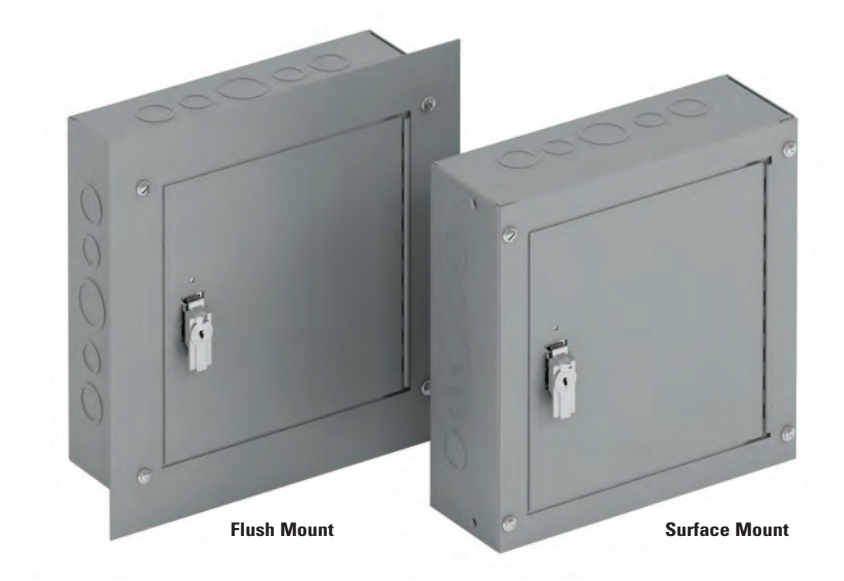

Application
- Houses electrical controls and instruments
- Used as wiring boxes, junction boxes, pull boxes, telephone and communication cable termination and spare fuse cabinet
- Protects against contact with enclosed equipment

Standards
- UL 50 listed, Type 1
- CSA C22.2 No. 40 certified, Type 1
- Conforms to NEMA standard for Type 1

Finish
- Wash and phosphate undercoat
- ANSI 61 gray acrylic electrocoat finish

Accessories
- Locks and latches
- Ground lug kit
- Terminal blocks
- Wood back boards, barriers and shelves
- Touch-up paint
- See Accessories section

Construction
- Cabinet and trim covers are fabricated from code gauge steel, (see page 80)
- Cabinet body has mounting holes on the back
- Knockouts on sides, top and bottom ends are standard on cabinets 24 inches wide or smaller, (see Type 1 Screw Cover Enclosures for knockout configuration) (see pages 50 - 53)
- Cabinets are available without knockouts
- Surface or flush mounting
- Doors have either a continuous or heavy-duty butt hinge
- Double-door construction on trim covers fitting cabinets when wider than 24 inches
- Tumbler lock with key furnished on single-door trim cover less than 48 inches high
- T-handle 3-pt lock with key furnished on 48" high single-door and all double-door trim covers
- Directory card holder on all trim covers wider than 18 inches
- Trim covers can be ordered separately and used with Type 1 Screw Cover Enclosures, (see page 80)
- Cupped washer and bright finish oval head screw used to protect trim cover finish and improve appearance

Discount Schedule: A2

Subclass: AQ0

Notes: We can provide special sizes, finishes and other modifications. Consult the factory for your special requirements.

Utility Cabinets
Type 1 Telephone Cabinets
Illustration Sheet

See page 80 for catalog numbers and dimensions

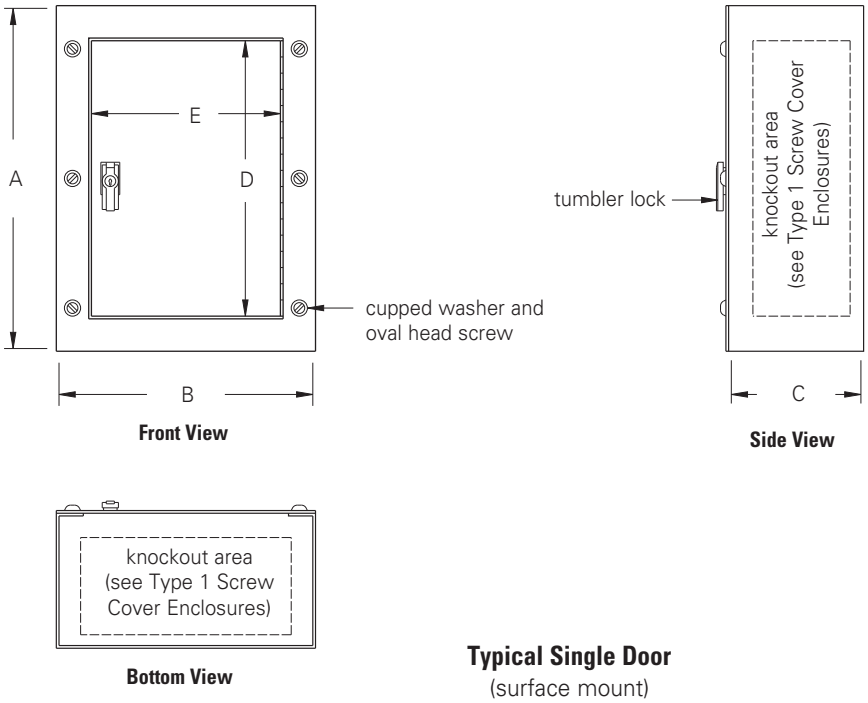

Typical Single Door
(surface mount)

Note: Knockouts are standard on cabinets 24 inches wide and smaller.
(See Type 1 Screw Cover Enclosures for KO configuration). (see pages 50 - 53)

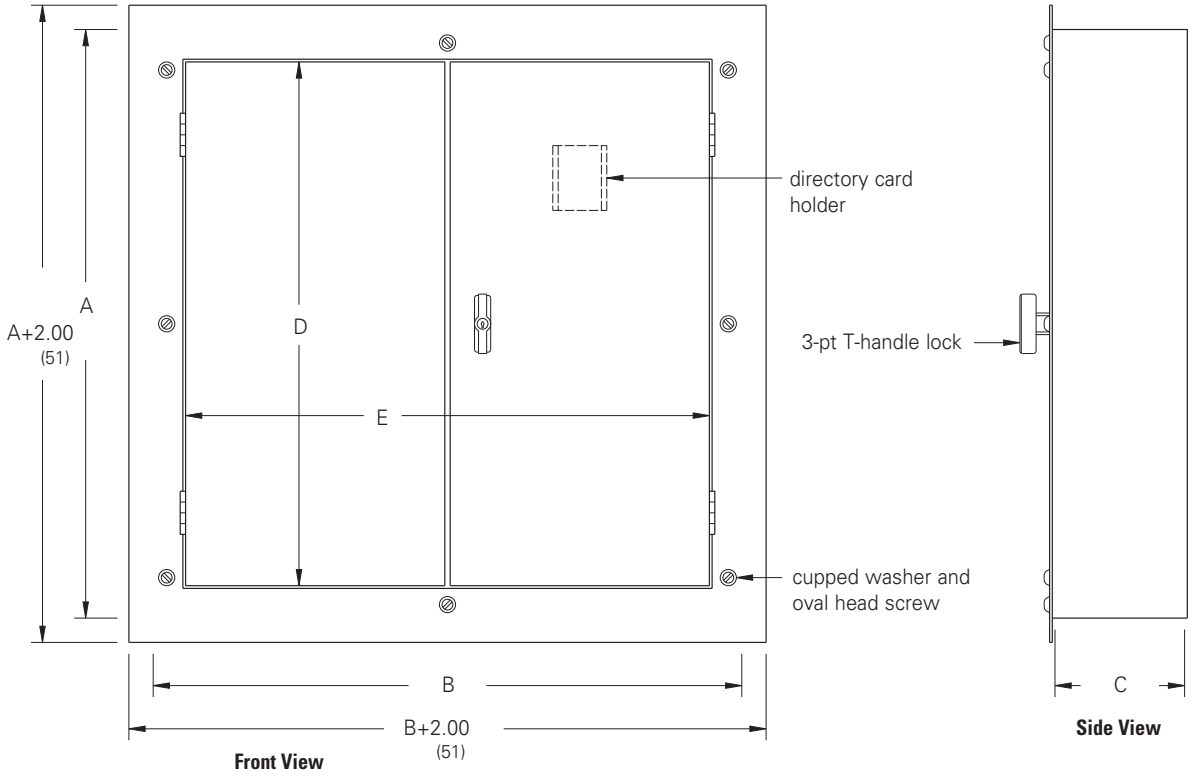

Typical Double Door
(flush mount)

Notes: Dimensions are in inches. Millimeters shown are for reference only. Data subject to change without notice.

Utility Cabinets
Type 1 Telephone Cabinets
Catalog Number

Cabinet Depth	Cabinet Catalog Number (includes trim cover)		Cabinet Size Height x Width x Depth A x B x C			Trim Cover Catalog Number (trim cover only - does not include cabinet)				Door Opening[1] Height D		Width E	
	Surface	Flush	in.	mm	Gauge	Surface	Gauge	Flush	Gauge	in.	mm	in.	mm
4	884 TCS	884 TCF	8.00 x 8.00 x 4.00	203 x 203 x 102	16	88 TCS	16	88 TCF	14	5	127	5	127
	10104 TCS	10104 TCF	10.00 x 10.00 x 4.00	254 x 254 x 102	16	1010 TCS	16	1010 TCF	14	6	152	6	152
	1284 TCS	1284 TCF	12.00 x 8.00 x 4.00	305 x 203 x 102	16	128 TCS	16	128 TCF	14	8	203	5	127
	12104 TCS	12104 TCF	12.00 x 10.00 x 4.00	305 x 254 x 102	16	1210 TCS	16	1210 TCF	14	8	203	6	152
	12124 TCS	12124 TCF	12.00 x 12.00 x 4.00	305 x 305 x 102	16	1212 TCS	16	1212 TCF	14	8	203	8	203
	16124 TCS	16124 TCF	16.00 x 12.00 x 4.00	406 x 305 x 102	16	1612 TCS	16	1612 TCF	14	12	305	8	203
	18124 TCS	18124 TCF	18.00 x 12.00 x 4.00	457 x 305 x 102	16	1812 TCS	16	1812 TCF	14	14	356	8	203
	18154 TCS	18154 TCF	18.00 x 15.00 x 4.00	457 x 381 x 102	16	1815 TCS	16	1815 TCF	14	14	356	11	279
	18184 TCS	18184 TCF	18.00 x 18.00 x 4.00	457 x 457 x 102	16	1818 TCS	16	1818 TCF	12	14	356	14	356
	24124 TCS	24124 TCF	24.00 x 12.00 x 4.00	610 x 305 x 102	16	2412 TCS	16	2412 TCF	12	19	483	8	203
	24184 TCS	24184 TCF	24.00 x 18.00 x 4.00	610 x 457 x 102	16	2418 TCS	14	2418 TCF	12	19	483	14	356
	24244 TCS	24244 TCF	24.00 x 24.00 x 4.00	610 x 610 x 102	14	2424 TCS	14	2424 TCF	12	19	483	19	483
	30154 TCS	30154 TCF	30.00 x 15.00 x 4.00	762 x 381 x 102	16	3015 TCS	14	3015 TCF	12	25	635	11	279
	30184 TCS	30184 TCF	30.00 x 18.00 x 4.00	762 x 457 x 102	16	3018 TCS	14	3018 TCF	12	25	635	14	356
	30244 TCS	30244 TCF	30.00 x 24.00 x 4.00	762 x 610 x 102	14	3024 TCS	14	3024 TCF	12	25	635	19	483
	30304 TCS NK	30304 TCF NK	30.00 x 30.00 x 4.00	762 x 762 x 102	12	3030 TCS	12	3030 TCF	12	25	635	25	635
	36244 TCS	36244 TCF	36.00 x 24.00 x 4.00	914 x 610 x 102	14	3624 TCS	14	3624 TCF	12	31	787	19	483
	36304 TCS NK	36304 TCF NK	36.00 x 30.00 x 4.00	914 x 762 x 102	12	3630 TCS	12	3630 TCF	12	31	787	25	635
	36364 TCS NK	36364 TCF NK	36.00 x 36.00 x 4.00	914 x 914 x 102	12	3636 TCS	12	3636 TCF	12	31	787	31	787
	48244 TCS	48244 TCF	48.00 x 24.00 x 4.00	1219 x 610 x 102	14	4824 TCS	12	4824 TCF	12	43	1092	19	483
	48364 TCS NK	48364 TCF NK	48.00 x 36.00 x 4.00	1219 x 914 x 102	12	4836 TCS	10	4836 TCF	10	43	1092	31	787
	48484 TCS NK	48484 TCF NK	48.00 x 48.00 x 4.00	1219 x 1219 x 102	12	4848 TCS	10	4848 TCF	10	43	1092	43	1092
6	10106 TCS	10106 TCF	10.00 x 10.00 x 6.00	254 x 254 x 152	16	1010 TCS	16	1010 TCF	14	6	152	6	152
	1286 TCS	1286 TCF	12.00 x 8.00 x 6.00	305 x 203 x 152	16	128 TCS	16	128 TCF	14	8	203	5	127
	12106 TCS	12106 TCF	12.00 x 10.00 x 6.00	305 x 254 x 152	16	1210 TCS	16	1210 TCF	14	8	203	6	152
	12126 TCS	12126 TCF	12.00 x 12.00 x 6.00	305 x 305 x 152	16	1212 TCS	16	1212 TCF	14	8	203	8	203
	16126 TCS	16126 TCF	16.00 x 12.00 x 6.00	406 x 305 x 152	16	1612 TCS	16	1612 TCF	14	12	305	8	203
	18126 TCS	18126 TCF	18.00 x 12.00 x 6.00	457 x 305 x 152	16	1812 TCS	16	1812 TCF	14	14	356	8	203
	18156 TCS	18156 TCF	18.00 x 15.00 x 6.00	457 x 381 x 152	16	1815 TCS	16	1815 TCF	14	14	356	11	279
	18186 TCS	18186 TCF	18.00 x 18.00 x 6.00	457 x 457 x 152	16	1818 TCS	16	1818 TCF	12	14	356	14	356
	24126 TCS	24126 TCF	24.00 x 12.00 x 6.00	610 x 305 x 152	16	2412 TCS	16	2412 TCF	12	19	483	8	203
	24186 TCS	24186 TCF	24.00 x 18.00 x 6.00	610 x 457 x 152	16	2418 TCS	14	2418 TCF	12	19	483	14	356
	24246 TCS	24246 TCF	24.00 x 24.00 x 6.00	610 x 610 x 152	14	2424 TCS	14	2424 TCF	12	19	483	19	483
	30156 TCS	30156 TCF	30.00 x 15.00 x 6.00	762 x 381 x 152	16	3015 TCS	14	3015 TCF	12	25	635	11	279
	30186 TCS	30186 TCF	30.00 x 18.00 x 6.00	762 x 457 x 152	16	3018 TCS	14	3018 TCF	12	25	635	14	356
	30246 TCS	30246 TCF	30.00 x 24.00 x 6.00	762 x 610 x 152	14	3024 TCS	14	3024 TCF	12	25	635	19	483
	30306 TCS NK	30306 TCF NK	30.00 x 30.00 x 6.00	762 x 762 x 152	12	3030 TCS	12	3030 TCF	12	25	635	25	635
	36246 TCS	36246 TCF	36.00 x 24.00 x 6.00	914 x 610 x 152	14	3624 TCS	14	3624 TCF	12	31	787	19	483
	36306 TCS NK	36306 TCF NK	36.00 x 30.00 x 6.00	914 x 762 x 152	12	3630 TCS	12	3630 TCF	12	31	787	25	635
	36366 TCS NK	36366 TCF NK	36.00 x 36.00 x 6.00	914 x 914 x 152	12	3636 TCS	12	3636 TCF	12	31	787	31	787
	48246 TCS	48246 TCF	48.00 x 24.00 x 6.00	1219 x 610 x 152	14	4824 TCS	12	4824 TCF	12	43	1092	19	483
	48366 TCS NK	48366 TCF NK	48.00 x 36.00 x 6.00	1219 x 914 x 152	12	4836 TCS	10	4836 TCF	10	43	1092	31	787
	48486 TCS NK	48486 TCF NK	48.00 x 48.00 x 6.00	1219 x 1219 x 152	12	4848 TCS	10	4848 TCF	10	43	1092	43	1092

[1] Door opening is approximate.

Notes: Dimensions are in inches. Millimeters shown are for reference only. Data subject to change without notice.

Utility Cabinets
Type 3R Telephone Cabinets
Data Sheet and Catalog Number

Application
- Used as telephone and communication cable termination and spare fuse cabinets
- Protects against falling rain, sleet and external ice formation

Standards
- UL 1863 listed, Type 3R
- Conforms to NEMA standard for Type 3R

Finish
- Wash and phosphate undercoat
- ANSI 61 gray acrylic electrocoat finish

Accessories
- Locks
- Terminal blocks
- Wood back boards, barriers and shelves
- Touch-up paint
- See Accessories section

Construction
- Cabinet and door are fabricated from code gauge galvaneal steel, (see table, page 81)
- Cabinet body has embossed mounting holes on the back
- Knockouts are standard on bottom end
- Door is secured to the body with heavy-duty butt hinges on one side and a T-handle lock with key on the opposite side

Discount Schedule: A2
Subclass: AQ0

Cabinet Catalog Number	Cabinet Size Height x Width x Depth A x B x C in.	mm	Gauge	Knockout Pattern Bottom
664 RTC	6.00 x 6.00 x 4.00	152 x 152 x 102	18	C D E
884 RTC	8.00 x 8.00 x 4.00	203 x 203 x 102	18	G H I J
12124 RTC	12.00 x 12.00 x 4.00	305 x 305 x 102	18	D E F G H
12126 RTC	12.00 x 12.00 x 6.00	305 x 305 x 152	18	D E F G H
18126 RTC	18.00 x 12.00 x 6.00	457 x 305 x 152	18	D E F G H
18186 RTC	18.00 x 18.00 x 6.00	457 x 457 x 152	16	B C D E F G H I J
24126 RTC	24.00 x 12.00 x 6.00	610 x 305 x 152	18	D E F G H
24186 RTC	24.00 x 18.00 x 6.00	610 x 457 x 152	16	B C D E F G H I J
24246 RTC	24.00 x 24.00 x 6.00	610 x 610 x 152	14	B C D E F G H I J
30246 RTC	30.00 x 24.00 x 6.00	762 x 610 x 152	14	B C D E F G H I J
36246 RTC	36.00 x 24.00 x 6.00	914 x 610 x 152	14	B C D E F G H I J
12128 RTC	12.00 x 12.00 x 8.00	305 x 305 x 203	18	D E F G H
18188 RTC	18.00 x 18.00 x 8.00	457 x 457 x 203	16	B C D E F G H I J
24248 RTC	24.00 x 24.00 x 8.00	610 x 610 x 203	14	B C D E F G H I J

See page 82 for dimensional drawings

Notes: We can provide special sizes, finishes and other modifications. Consult the factory for your special requirements. Dimensions are in inches. Millimeters shown are for reference only. Data subject to change without notice.

Utility Cabinets
Type 3R Telephone Cabinets
Illustration Sheet

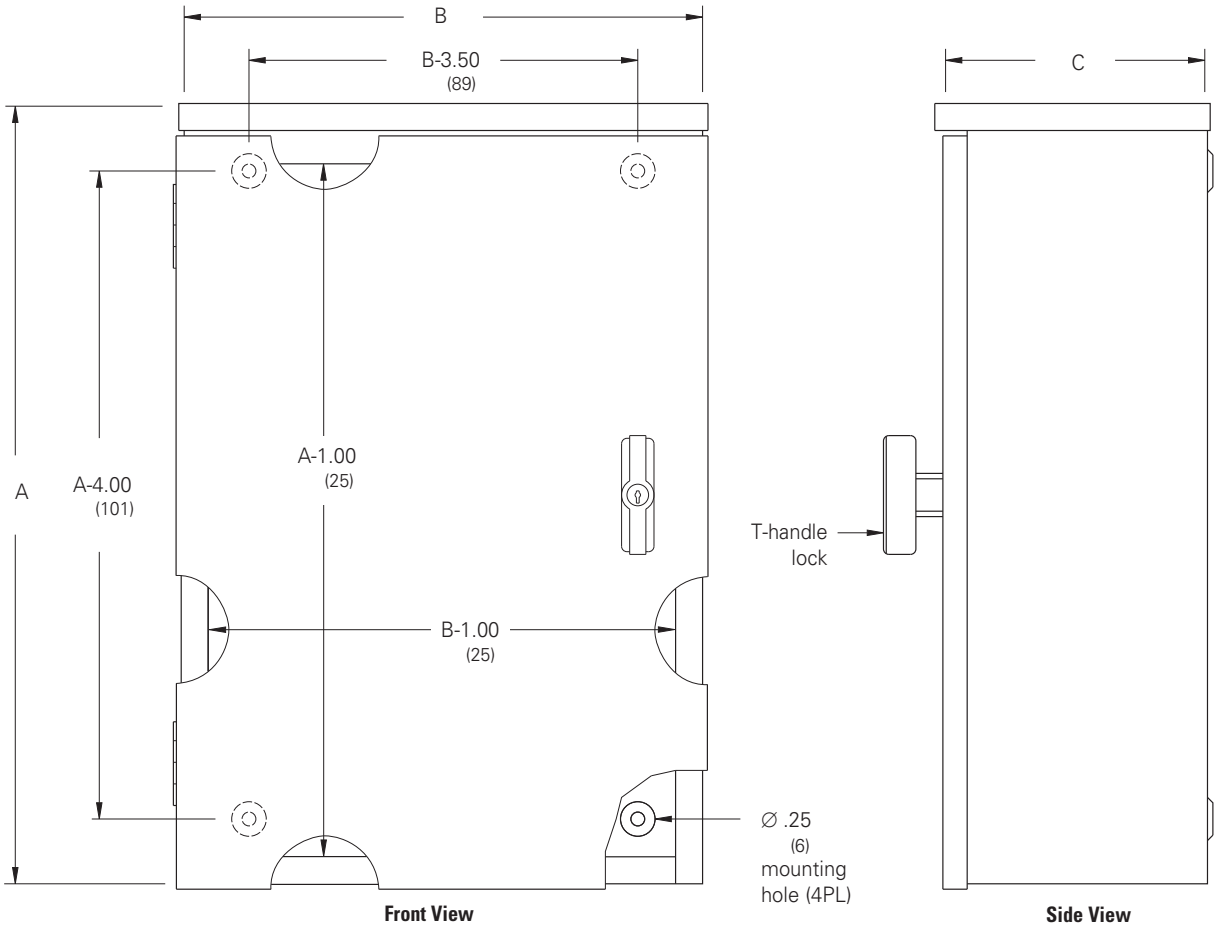

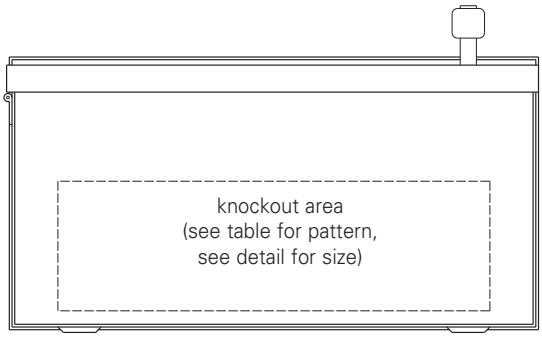

Bottom View

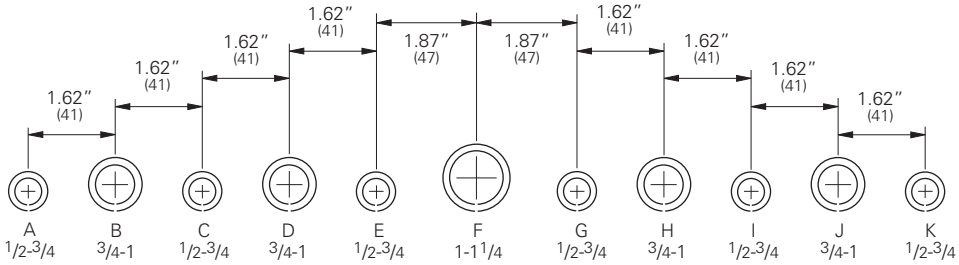

Conduit Sizes
Knockout Detail

Note: See table for applicable knockout pattern.

Notes: Dimensions are in inches. Millimeters shown are for reference only. Data subject to change without notice.

Utility Cabinets
Type 3R Screw Cover Current Transformer Cabinets
Data Sheet

Application
- Designed to house current transformers
- Used as wiring boxes, junction and pull boxes
- Protects against falling rain, sleet and external ice formation

Standards
- UL 414 listed, Type 3R
- Conforms to NEMA standard for Type 3R

Finish
- Wash and phosphate undercoat
- ANSI 61 gray acrylic electrocoat finish

Accessories
- Touch-up paint
- See Accessories section

Construction
- Enclosure and cover are fabricated from code gauge galvaneal steel, (see table, page 84)
- Enclosure body has mounting holes on the back
- .250-20 mounting studs are furnished on the enclosure body of most sizes for utility current transformer mounting equipment, (see drawing, page 85)
- Cover is held secure by sliding it under the top end flange and fastening it to the bottom end and side flanges
- Cover mounting studs and wing nuts have a utility sealing hole provision as well as a padlocking provision for sealing the cover to the enclosure
- Enclosures 36 inches wide x 42 inches high and larger have two overlapping covers
- Fixed cover handles
- A ground lug is mounted on the inside bottom end of each cabinet

Discount Schedule: B9
Subclass: AV0

Notes: We can provide special sizes, finishes and other modifications. Consult the factory for your special requirements.

Utility Cabinets
Type 3R Screw Cover Current Transformer Cabinets
Catalog Number

Enclosure Catalog Number	Enclosure Size Height x Width x Depth A x B x C in.	mm	Gauge	D in.	D mm	E in.	E mm	F in.	F mm	G in.	G mm
18249 RTCT	24.00 x 18.00 x 9.00	610 x 457 x 229	16	-	-	-	-	-	-	-	-
24329 RTCT	32.00 x 24.00 x 9.00	813 x 610 x 229	14	-	-	-	-	-	-	-	-
242411 RTCT	24.00 x 24.00 x 11.00	610 x 610 x 279	14	9.00	229	8.00	203	8.00	203	-	-
243011 RTCT	30.00 x 24.00 x 11.00	762 x 610 x 279	14	12.00	305	8.00	203	8.00	203	-	-
243611 RTCT	36.00 x 24.00 x 11.00	914 x 610 x 279	14	15.00	381	8.00	203	8.00	203	-	-
244811 RTCT	48.00 x 24.00 x 11.00	1219 x 610 x 279	14	21.00	533	8.00	203	8.00	203	-	-
303011 RTCT	30.00 x 30.00 x 11.00	762 x 762 x 279	12	12.00	305	7.00	178	8.00	203	8.00	203
303611 RTCT	36.00 x 30.00 x 11.00	914 x 762 x 279	12	15.00	381	7.00	178	8.00	203	8.00	203
363611 RTCT	36.00 x 36.00 x 11.00	914 x 914 x 279	12	15.00	381	10.00	254	8.00	203	8.00	203
364211 RTCT	42.00 x 36.00 x 11.00	1067 x 914 x 279	12	18.00	457	10.00	254	8.00	203	8.00	203
364811 RTCT	48.00 x 36.00 x 11.00	1219 x 914 x 279	12	21.00	533	10.00	254	8.00	203	8.00	203
424211 RTCT	42.00 x 42.00 x 11.00	1067 x 1067 x 279	12	18.00	457	13.00	330	8.00	203	8.00	203
* 484811 RTCT	48.00 x 48.00 x 11.00	1219 x 1219 x 279	12	-	-	-	-	-	-	-	-
303614 RTCT	36.00 x 30.00 x 14.00	914 x 762 x 356	12	15.00	381	7.00	178	8.00	203	8.00	203
364814 RTCT	48.00 x 36.00 x 14.00	1219 x 914 x 356	12	21.00	533	10.00	254	8.00	203	8.00	203

Consult the local Utility for area acceptance.
* Mounting studs not included.

See page 85 for dimensional drawings

Notes: Dimensions are in inches. Millimeters shown are for reference only. Data subject to change without notice.

Utility Cabinets
Type 3R Screw Cover Current Transformer Cabinets
Illustration Sheet

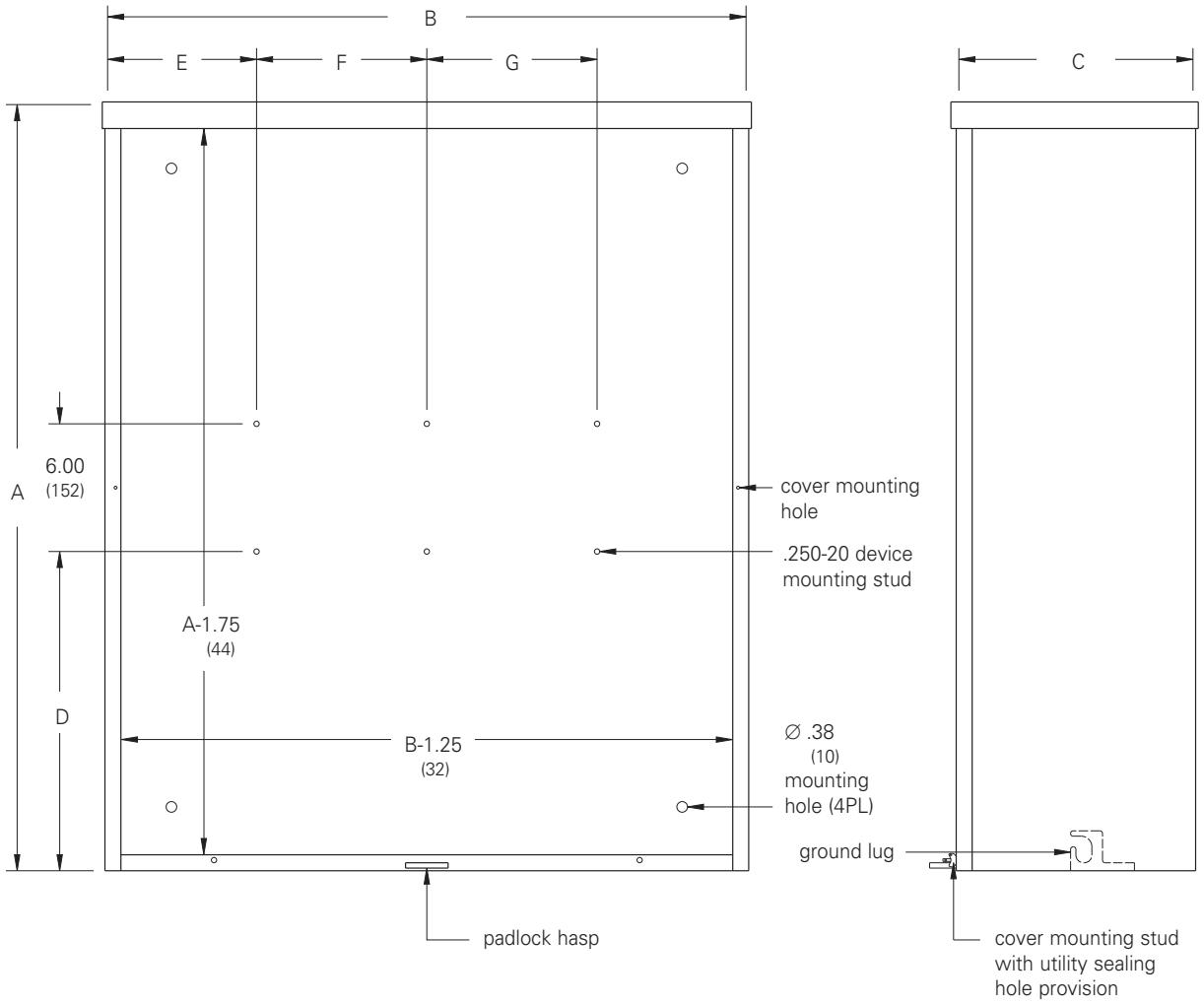

Front View
(cover removed)

Side View

Notes: Dimensions are in inches. Millimeters shown are for reference only. Data subject to change without notice.

Utility Cabinets
Type 3R Hinge Cover Current Transformer Cabinets
Data Sheet

Application
- Designed to house current transformers
- Used as wiring boxes, junction and pull boxes
- Protects against falling rain, sleet and external ice formation

Standards
- UL 414 listed, Type 3R
- Conforms to NEMA standard for Type 3R

Finish
- Wash and phosphate undercoat
- ANSI 61 gray acrylic electrocoat finish

Accessories
- Touch-up paint
- See Accessories section

Construction
- Enclosure and cover are fabricated from code gauge galvaneal steel, (see table, page 87)
- Enclosure body has mounting holes on the back
- .250-20 mounting studs are furnished on the enclosure body of most sizes for utility current transformer mounting equipment, (see drawing, page 87)
- Covers are secured to the body with a heavy-duty slip-hinge on the left side and mounting studs and wing nuts with utility sealing hole provisions on the opposite side
- Covers are completely removable when in the open position
- Fixed door handles
- A ground lug is mounted on the inside bottom end of each cabinet

Discount Schedule: B9

Subclass: AV0

Notes: We can provide special sizes, finishes and other modifications. Consult the factory for your special requirements.

Utility Cabinets
Type 3R Hinge Cover Current Transformer Cabinets
Illustration Sheet and Catalog Number

Enclosure Catalog Number	Enclosure Size Height x Width x Depth A x B x C in.	mm	Gauge	D in.	D mm	E in.	E mm	F in.	F mm	G in.	G mm
203611 HRTCT	36.00 x 20.00 x 11.00	914 x 508 x 279	14	-	-	-	-	-	-	-	-
243011 HRTCT	30.00 x 24.00 x 11.00	762 x 610 x 279	14	12.00	305	8.00	203	8.00	203	-	-
244811 HRTCT	48.00 x 24.00 x 11.00	1219 x 610 x 279	14	21.00	533	8.00	203	8.00	203	-	-
303611 HRTCT	36.00 x 30.00 x 11.00	914 x 762 x 279	12	15.00	381	7.00	178	8.00	203	8.00	203
304811 HRTCT	48.00 x 30.00 x 11.00	1219 x 762 x 279	12	21.00	533	7.00	178	8.00	203	8.00	203
363611 HRTCT	36.00 x 36.00 x 11.00	914 x 914 x 279	12	15.00	381	10.00	254	8.00	203	8.00	203
364811 HRTCT	48.00 x 36.00 x 11.00	1219 x 914 x 279	12	21.00	533	10.00	254	8.00	203	8.00	203

Consult the local Utility for area acceptance.

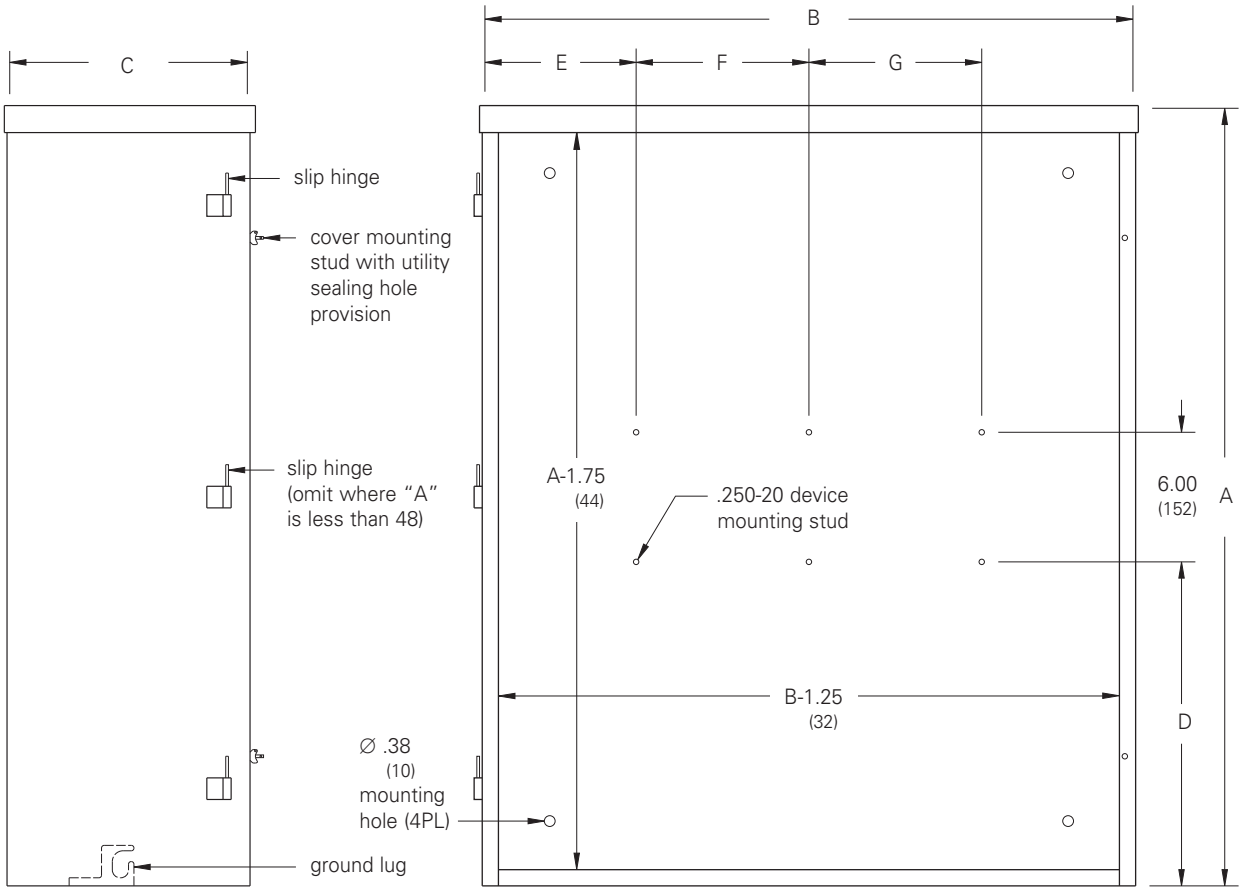

Side View
(cover removed)

Front View
(cover removed)

Notes: Dimensions are in inches. Millimeters shown are for reference only. Data subject to change without notice.

Type 1, 3, & 3R Enclosures - Notes

JIC Enclosures Type 12 Lift-Off Cover 90-91
JIC Enclosures Type 12 Continuous Hinge Cover 92-93
JIC Enclosures Type 12 Screw Cover 94-95
JIC Enclosures Type 12 Continuous Hinge Screw Cover 96-97
JIC Enclosures Type 12 Continuous Hinge Quick-Release Cover 98-99
JIC Enclosures Type 12 Large Continuous Hinge Screw Cover 100-101
JIC Enclosures Type 12 Continuous Hinge Flanged Trough Cover 102-103
Wall-Mount Enclosures Type 12 Single-Door 104-107
Wall-Mount Enclosures Type 12 Terminal 108-109
Wall-Mount Enclosures Type 12 Double-Door 3-Point Locking 110-111
Ground-Mount Enclosures Type 12 Double-Door Floor-Standing 3-Point Locking 112-113
Ground-Mount Enclosures Type 12 Double-Door Free-Standing 3-Point Locking 114-116
Free-Standing Enclosure Accessories 117-125
Ground-Mount Enclosures Type 12 Modular Free-Standing 3-Point Locking 126-129
Ground-Mount Enclosures Type 12 Multi-Door Free-Standing 3-Point Locking 130-133

JIC Enclosures
Type 12 Lift-Off Cover
Data Sheet

Application
- Houses electrical controls and instruments
- Protects against circulating dust, falling dirt and dripping non-corrosive liquids

Standards
- UL 508A listed, Type 12 and Type 13
- CSA C22.2 No.94 certified, Type 12 and Type 13
- Conforms to NEMA standard for Type 12 and Type 13

Finish
- Wash and phosphate undercoat
- ANSI 61 gray polyester powder finish
- Hardware and clamps are zinc plated

Accessories
- Panels
- JIC terminal strap kit
- JIC terminal strip kit
- Terminal blocks
- Touch-up paint
- #8-32 self tapping screw (10168)
- See Accessories section

Construction
- Enclosure and cover are fabricated from (16) gauge steel
- All continuous welded seams are finished smooth
- Cover is secured to the body with semi-hinge(s) on one side and easy-to-operate screw clamps mounted to the opposite side
- Chain holds cover to body when screw clamps are released
- Cover has a seamless poured in-place gasket
- Ground stud provided on cover
- #10-32 weldnuts are provided for mounting optional panel on 6" x 4" and larger enclosures
- External mounting feet are provided for secure wall mounting

Discount Schedule: C2

Subclass: DE1

Notes: We can provide special sizes, finishes and other modifications. Consult the factory for your special requirements.

JIC Enclosures
Type 12 Lift-Off Cover
Illustration Sheet and Catalog Number

Enclosure Catalog Number	Enclosure Size Height x Width x Depth A x B x C in.	mm	D in.	mm	Panel Catalog Number Solid	Perforarted	Panel Size Height x Width in.	mm
443-12LC	4.00 x 4.00 x 3.00	102 x 102 x 76	2.00	51	—	—	—	—
643-12LC	6.00 x 4.00 x 3.00	152 x 102 x 76	2.00	51	**AW64P**	**AW64PP**	4.87 x 2.87	124 x 73
863.5-12LC	8.00 x 6.00 x 3.50	203 x 152 x 89	3.00	76	**AW86P**	**AW86PP**	6.87 x 4.87	174 x 124
444-12LC	4.00 x 4.00 x 4.00	102 x 102 x 102	2.00	51	—	—	—	—
644-12LC	6.00 x 4.00 x 4.00	152 x 102 x 102	2.00	51	**AW64P**	**AW64PP**	4.87 x 2.87	124 x 73
664-12LC	6.00 x 6.00 x 4.00	152 x 152 x 102	3.00	76	**AW66P**	**AW66PP**	4.87 x 4.87	124 x 124
884-12LC	8.00 x 8.00 x 4.00	203 x 203 x 102	2.00	51	**AW88P**	**AW88PP**	6.87 x 6.87	174 x 174
1084-12LC	10.00 x 8.00 x 4.00	254 x 203 x 102	2.00	51	**AW108P**	**AW108PP**	8.87 x 6.87	225 x 174
12105-12LC	12.00 x 10.00 x 5.00	305 x 254 x 127	2.00	51	**AW1210P**	**AW1210PP**	10.87 x 8.87	276 x 225
14126-12LC	14.00 x 12.00 x 6.00	356 x 305 x 152	3.00	76	**AW1412P**	**AW1412PP**	12.87 x 10.87	327 x 276
16146-12LC	16.00 x 14.00 x 6.00	406 x 356 x 152	3.00	76	**AW1614P**	**AW1614PP**	14.87 x 12.87	378 x 327

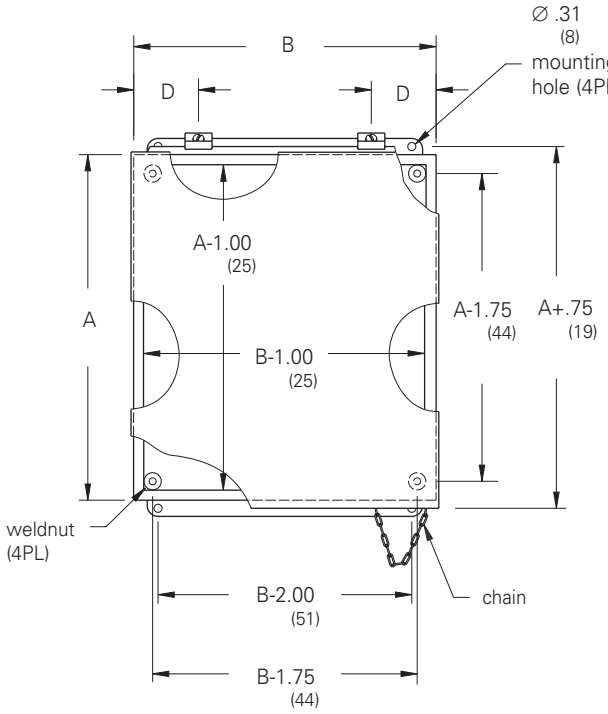

Front View

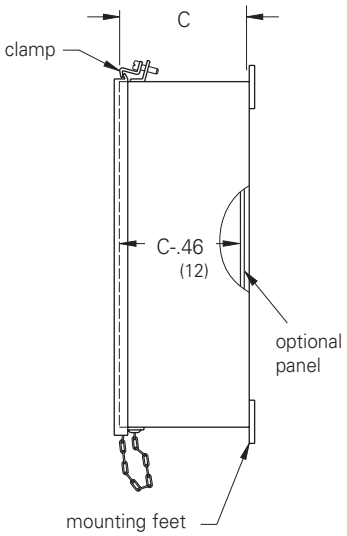

Side View

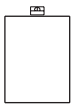

443-12LC
643-12LC
863.5-12LC
444-12LC
644-12LC
664-12LC
866-12LC

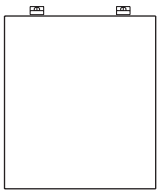

884-12LC
1084-12LC
12105-12LC
1086-12LC
10106-12LC
12126-12LC
14126-12LC
16146-12LC
16148-12LC

Cover Clamp Layout

Notes: Dimensions are in inches. Millimeters shown are for reference only. Data subject to change without notice.

JIC Enclosures
Type 12 Continuous Hinge Cover
Data Sheet

Application
- Houses electrical controls and instruments
- Protects against circulating dust, falling dirt and dripping non-corrosive liquids

Standards
- UL 508A listed, Type 12 and Type 13
- CSA C22.2 No.94 certified, Type 12 and Type 13
- Conforms to NEMA standard for Type 12 and Type 13

Finish
- Wash and phosphate undercoat
- ANSI 61 gray polyester powder finish
- Hardware and clamps are zinc plated

Accessories
- Panels
- JIC terminal strap kit
- JIC terminal strip kit
- Terminal blocks
- Touch-up paint
- #8-32 self tapping screw (10168)
- See Accessories section

Construction
- Enclosure and cover are fabricated from (16) gauge steel
- All continuous welded seams are finished smooth
- Cover is secured to the body with a continuous hinge on one side and easy-to-operate screw clamps mounted to the opposite side
- Cover has a seamless poured in-place gasket
- Ground stud provided on cover
- #10-32 weldnuts are provided for mounting optional panel on 6″ x 4″ and larger enclosures
- External mounting feet are provided for secure wall mounting

Discount Schedule: C2

Subclass: DE0

Notes: We can provide special sizes, finishes and other modifications. Consult the factory for your special requirements.

JIC Enclosures
Type 12 Continuous Hinge Cover
Illustration Sheet and Catalog Number

Enclosure Catalog Number	Enclosure Size Height x Width x Depth A x B x C in.	mm	D in.	mm	Panel Catalog Number Solid	Perforated	Panel Size Height x Width in.	mm
443-12CHC	4.00 x 4.00 x 3.00	102 x 102 x 76	2.00	51	—	—	—	—
643-12CHC	6.00 x 4.00 x 3.00	152 x 102 x 76	3.00	76	AW64P	AW64PP	4.87 x 2.87	124 x 73
863.5-12CHC	8.00 x 6.00 x 3.50	203 x 152 x 89	4.00	102	AW86P	AW86PP	6.87 x 4.87	174 x 124
444-12CHC	4.00 x 4.00 x 4.00	102 x 102 x 102	2.00	51	—	—	—	—
644-12CHC	6.00 x 4.00 x 4.00	152 x 102 x 102	3.00	76	AW64P	AW64PP	4.87 x 2.87	124 x 76
664-12CHC	6.00 x 6.00 x 4.00	152 x 152 x 102	3.00	76	AW66P	AW66PP	4.87 x 4.87	124 x 124
884-12CHC	8.00 x 8.00 x 4.00	203 x 203 x 102	4.00	102	AW88P	AW88PP	6.87 x 6.87	174 x 174
1084-12CHC	10.00 x 8.00 x 4.00	254 x 203 x 102	2.00	51	AW108P	AW108PP	8.87 x 6.87	225 x 174
1084-12CHCS	10.00 x 8.00 x 4.00	254 x 203 x 102	2.00	51	AW108P	AW108PP	8.87 x 6.87	225 x 174
1264-12CHC	12.00 x 6.00 x 4.00	305 x 152 x 102	3.00	76	AW126P	AW126PP	10.87 x 4.87	272 x 124
12105-12CHC	12.00 x 10.00 x 5.00	305 x 254 x 127	3.00	76	AW1210P	AW1210PP	10.87 x 8.87	272 x 225
12105-12CHCS	12.00 x 10.00 x 5.00	305 x 254 x 127	3.00	76	AW1210P	AW1210PP	10.87 x 8.87	272 x 225
866-12CHC	8.00 x 6.00 x 6.00	203 x 152 x 152	4.00	102	AW86P	AW86PP	6.87 x 4.87	174 x 124
886-12CHC	8.00 x 8.00 x 6.00	203 x 203 x 152	4.00	102	AW88P	AW88PP	6.87 x 6.87	174 x 174
1086-12CHC	10.00 x 8.00 x 6.00	254 x 203 x 152	2.00	51	AW108P	AW108PP	8.87 x 6.87	225 x 174
10106-12CHC	10.00 x 10.00 x 6.00	254 x 254 x 152	2.00	51	AW1010P	AW1010PP	8.87 x 8.87	225 x 225
12106-12CHC	12.00 x 10.00 x 6.00	305 x 254 x 152	3.00	76	AW1210P	AW1210PP	10.87 x 8.87	272 x 225
12126-12CHC	12.00 x 12.00 x 6.00	305 x 305 x 152	3.00	76	AW1212P	AW1212PP	10.87 x 10.87	272 x 272
1486-12CHC	14.00 x 8.00 x 6.00	356 x 203 x 152	3.00	76	AW148P	AW148PP	12.87 x 6.87	327 x 174
14126-12CHC	14.00 x 12.00 x 6.00	356 x 305 x 152	3.00	76	AW1412P	AW1412PP	12.87 x 10.87	327 x 272
14126-12CHCS	14.00 x 12.00 x 6.00	356 x 305 x 152	3.00	76	AW1412P	AW1412PP	12.87 x 10.87	327 x 272
16106-12CHC	16.00 x 10.00 x 6.00	406 x 254 x 152	3.00	76	AW1610P	AW1610PP	14.87 x 8.87	378 x 225
16146-12CHC	16.00 x 14.00 x 6.00	406 x 356 x 152	3.00	76	AW1614P	AW1614PP	14.87 x 12.87	378 x 327
16146-12CHCS	16.00 x 14.00 x 6.00	406 x 356 x 152	3.00	76	AW1614P	AW1614PP	14.87 x 12.87	378 x 327
10108-12CHC	10.00 x 10.00 x 8.00	254 x 254 x 203	2.00	51	AW1010P	AW1010PP	8.87 x 8.87	225 x 225
12108-12CHC	12.00 x 10.00 x 8.00	305 x 254 x 203	3.00	76	AW1210P	AW1210PP	10.87 x 8.87	272 x 225
14128-12CHC	14.00 x 12.00 x 8.00	356 x 305 x 203	3.00	76	AW1412P	AW1412PP	12.87 x 10.87	327 x 272
16148-12CHC	16.00 x 14.00 x 8.00	406 x 356 x 203	3.00	76	AW1614P	AW1614PP	14.87 x 12.87	378 x 327
161410-12CHC	16.00 x 14.00 x 10.00	406 x 356 x 254	3.00	76	AW1614P	AW1614PP	14.87 x 12.87	378 x 327

Note: Catalog numbers ending in -12 CHCS are hinged on the short side.

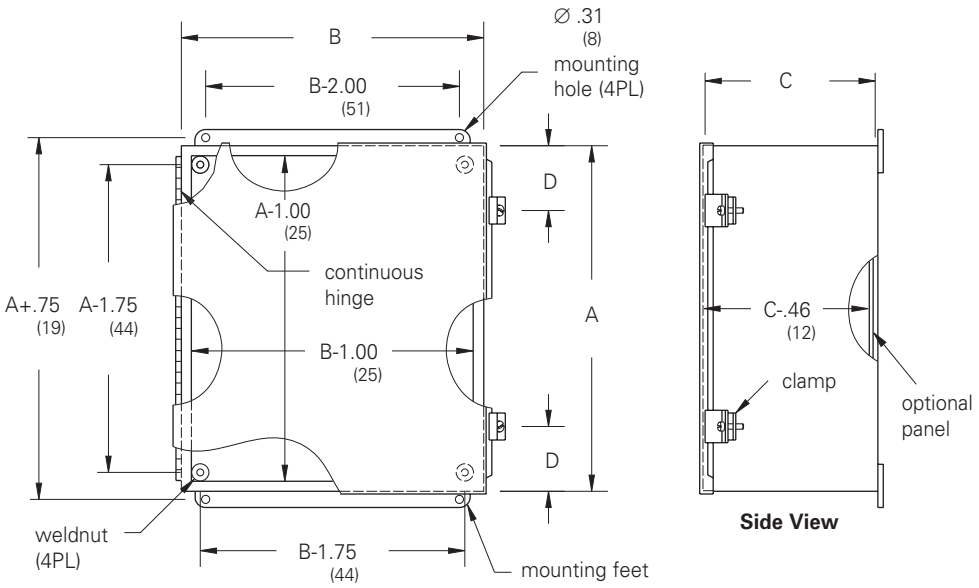

Front View

Side View

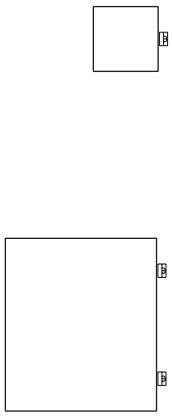

Cover Clamp Layout

443-12CHC
643-12CHC
444-12CHC
644-12CHC
664-12CHC
863.5-12CHC
884-12CHC
866-12CHC
886-12CHC

1084-12CHC
1264-12CHC
12105-12CHC
1086-12CHC
10106-12CHC
12106-12CHC
12126-12CHC
1486-12CHC
14126-12CHC
16106-12CHC
10108-12CHC
16146-12CHC
12108-12CHC
14128-12CHC
16148-12CHC
161410-12CHC

Notes: Dimensions are in inches. Millimeters shown are for reference only. Data subject to change without notice.

JIC Enclosures
Type 12 Screw Cover
Data Sheet

Application
- Houses electrical controls and instruments
- Protects against circulating dust, falling dirt and dripping non-corrosive liquids

Standards
- UL 508A listed, Type 12 and Type 13
- CSA C22.2 No.94 certified, Type 12 and Type 13
- Conforms to NEMA standard for Type 12 and Type 13

Finish
- Wash and phosphate undercoat
- ANSI 61 gray polyester powder finish

Accessories
- Panels
- JIC terminal strap kit
- JIC terminal strip kit
- Terminal blocks
- Touch-up paint
- #8-32 self tapping screw (10168)
- See Accessories section

Construction
- Enclosure and cover are fabricated from (16) gauge steel
- All continuous welded seams are finished smooth
- Cover is attached with captive screws which thread into sealed well nuts
- Cover has a fixed, oil-resistant gasket
- Ground stud provided on cover
- #10-32 weldnuts are provided for mounting optional panel on 6" x 4" and larger enclosures
- External mounting feet are provided for secure wall mounting

Discount Schedule: C2

Subclass: DE0

Notes: We can provide special sizes, finishes and other modifications. Consult the factory for your special requirements.

JIC Enclosures
Type 12 Screw Cover
Illustration Sheet and Catalog Number

Enclosure Catalog Number	Enclosure Size Height x Width x Depth A x B x C in.	mm	Panel Solid	Panel Perforated	Panel Size Catalog Number Height x Width in.	mm
443-12SC	4.00 x 4.00 x 3.00	102 x 102 x 76	—	—	—	—
643-12SC	6.00 x 4.00 x 3.00	152 x 102 x 76	**AW64P**	**AW64PP**	4.87 x 2.87	124 x 73
863.5-12SC	8.00 x 6.00 x 3.50	203 x 152 x 89	**AW86P**	**AW86PP**	6.87 x 4.87	174 x 124
444-12SC	4.00 x 4.00 x 4.00	102 x 102 x 102	—	—	—	—
644-12SC	6.00 x 4.00 x 4.00	152 x 102 x 102	**AW64P**	**AW64PP**	4.87 x 2.87	124 x 73
664-12SC	6.00 x 6.00 x 4.00	152 x 152 x 102	**AW66P**	**AW66PP**	4.87 x 4.87	124 x 124
884-12SC	8.00 x 8.00 x 4.00	203 x 203 x 102	**AW88P**	**AW88PP**	6.87 x 6.87	174 x 174
1084-12SC	10.00 x 8.00 x 4.00	254 x 203 x 102	**AW108P**	**AW108PP**	8.87 x 6.87	225 x 174
10104-12SC	10.00 x 10.00 x 4.00	254 x 254 x 102	**AW1010P**	**AW1010PP**	8.87 x 8.87	225 x 225
12105-12SC	12.00 x 10.00 x 5.00	305 x 254 x 127	**AW1210P**	**AW1210PP**	10.87 x 8.87	272 x 225
866-12SC	8.00 x 6.00 x 6.00	203 x 152 x 152	**AW86P**	**AW86PP**	6.87 x 4.87	174 x 124
1086-12SC	10.00 x 8.00 x 6.00	254 x 203 x 152	**AW108P**	**AW108PP**	8.87 x 6.87	225 x 174
10106-12SC	10.00 x 10.00 x 6.00	254 x 254 x 152	**AW1010P**	**AW1010PP**	8.87 x 8.87	225 x 225
12126-12SC	12.00 x 12.00 x 6.00	305 x 305 x 152	**AW1212P**	**AW1212PP**	10.87 x 10.87	272 x 272
14126-12SC	14.00 x 12.00 x 6.00	356 x 305 x 152	**AW1412P**	**AW1412PP**	12.87 x 10.87	327 x 272
16146-12SC	16.00 x 14.00 x 6.00	406 x 356 x 152	**AW1614P**	**AW1614PP**	14.87 x 12.87	378 x 327

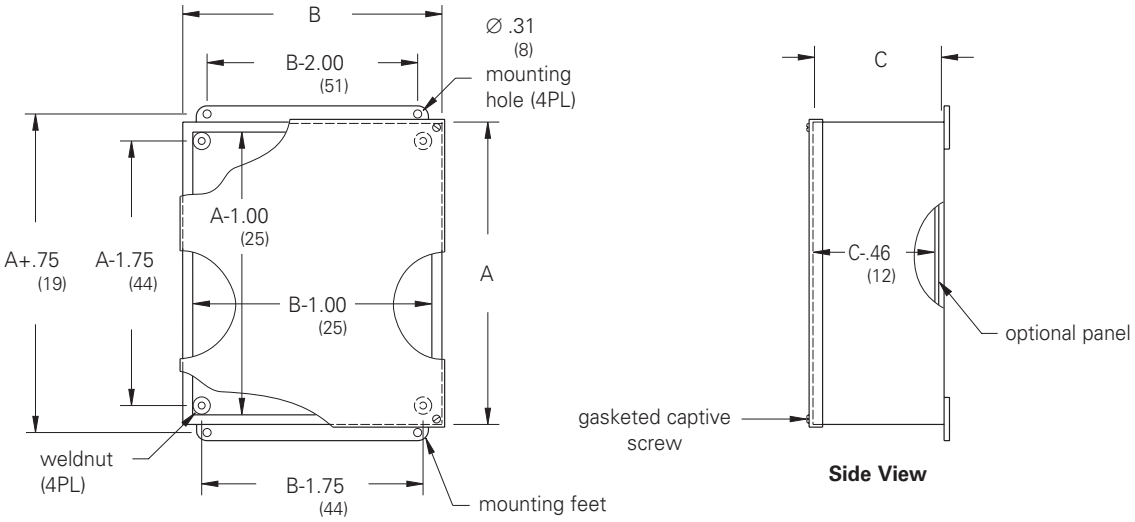

Front View

Side View

Notes: Dimensions are in inches. Millimeters shown are for reference only. Data subject to change without notice.

JIC Enclosures
Type 12 Continuous Hinge Screw Cover
Data Sheet

Application
- Houses electrical controls and instruments
- Protects against circulating dust, falling dirt and dripping non-corrosive liquids

Standards
- UL 508A listed, Type 12 and Type 13
- CSA C22.2 No.94 certified, Type 12 and Type 13
- Conforms to NEMA standard for Type 12 and Type 13

Finish
- Wash and phosphate undercoat
- ANSI 61 gray polyester powder finish

Accessories
- Panels
- JIC terminal strap kit
- JIC terminal strip kit
- Terminal blocks
- Touch-up paint
- #8-32 self tapping screw (10168)
- See Accessories section

Construction
- Enclosure and cover are fabricated from (16) gauge steel
- All continuous welded seams are finished smooth
- Cover is secured to the body with a continuous hinge on one side and captive screws which thread into sealed well nuts on the opposite side
- Cover has a fixed, oil-resistant gasket
- Ground stud provided on cover
- #10-32 weldnuts are provided for mounting optional panel
- External mounting feet are provided for secure wall mounting

Discount Schedule: C2

Subclass: DE1

Notes: We can provide special sizes, finishes and other modifications. Consult the factory for your special requirements.

JIC Enclosures
Type 12 Continuous Hinge Screw Cover
Illustration Sheet and Catalog Number

Enclosure	Enclosure Size Height x Width x Depth A x B x C		Panel Catalog Number		Panel Size Height x Width	
Catalog Number	in.	mm	Solid	Perforated	in.	mm
664-12CHSC	6.00 x 6.00 x 4.00	152 x 152 x 102	AW66P	AW66PP	4.87 x 4.87	124 x 124
864-12CHSC	8.00 x 6.00 x 4.00	203 x 152 x 102	AW86P	AW86PP	6.87 x 4.87	174 x 124
884-12CHSC	8.00 x 8.00 x 4.00	203 x 203 x 102	AW88P	AW88PP	6.87 x 6.87	174 x 174
1084-12CHSC	10.00 x 8.00 x 4.00	254 x 203 x 102	AW108P	AW108PP	8.87 x 6.87	225 x 174
10104-12CHSC	10.00 x 10.00 x 4.00	254 x 254 x 102	AW1010P	AW1010PP	8.87 x 8.87	225 x 225
12104-12CHSC	12.00 x 10.00 x 4.00	305 x 254 x 102	AW1210P	AW1210PP	10.87 x 8.87	272 x 225
866-12CHSC	8.00 x 6.00 x 6.00	203 x 152 x 152	AW86P	AW86PP	6.87 x 4.87	174 x 124
886-12CHSC	8.00 x 8.00 x 6.00	203 x 203 x 152	AW88P	AW88PP	6.87 x 6.87	174 x 174
1086-12CHSC	10.00 x 8.00 x 6.00	254 x 203 x 152	AW108P	AW108PP	8.87 x 6.87	225 x 174
10106-12CHSC	10.00 x 10.00 x 6.00	254 x 254 x 152	AW1010P	AW1010PP	8.87 x 8.87	225 x 225
12106-12CHSC	12.00 x 10.00 x 6.00	305 x 254 x 152	AW1210P	AW1210PP	10.87 x 8.87	272 x 225
12126-12CHSC	12.00 x 12.00 x 6.00	305 x 305 x 152	AW1212P	AW1212PP	10.87 x 10.87	272 x 272
14126-12CHSC	14.00 x 12.00 x 6.00	356 x 305 x 152	AW1412P	AW1412PP	12.87 x 10.87	327 x 272

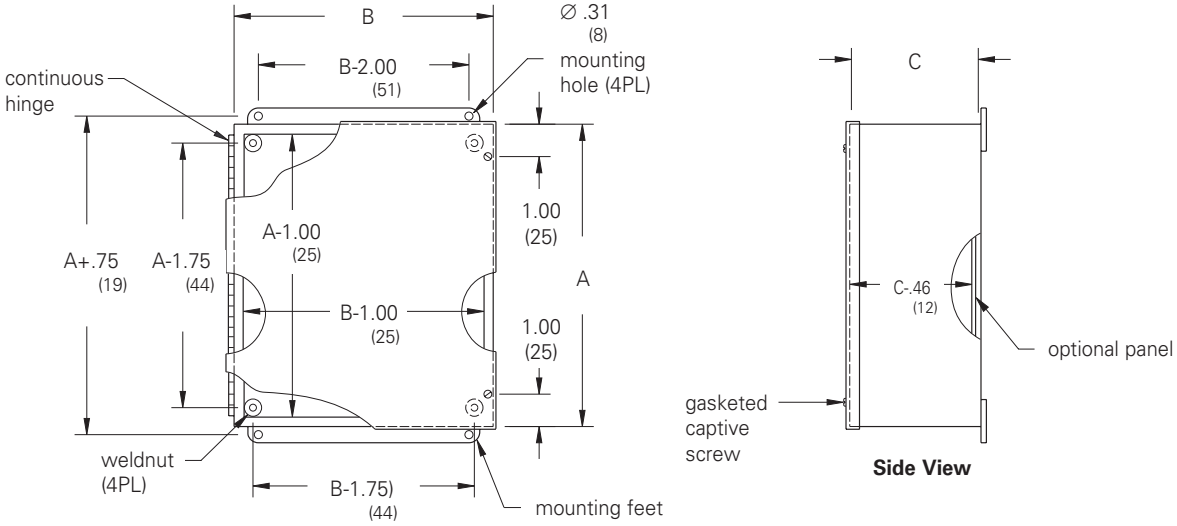

Notes: Dimensions are in inches. Millimeters shown are for reference only. Data subject to change without notice.

JIC Enclosures
Type 12 Continuous Hinge Quick-Release Cover
Data Sheet

Application
- Houses electrical controls and instruments
- Protects against circulating dust, falling dirt and dripping non-corrosive liquids

Standards
- UL 508A listed, Type 12 and Type 13
- Conforms to NEMA standard for Type 12 and Type 13

Finish
- Wash and phosphate undercoat
- ANSI 61 gray polyester powder finish
- Latches are zinc plated

Accessories
- Panels
- JIC terminal strap kit
- JIC terminal strip kit
- Terminal blocks
- Touch-up paint
- #8-32 self tapping screw (10168)
- See Accessories section

Construction
- Enclosure and cover are fabricated from (16) gauge steel
- All continuous welded seams are finished smooth
- Cover is secured to the body with a continuous hinge on one side and quick-release latches mounted to the opposite side
- Cover has a seamless poured in-place gasket
- Ground stud provided on cover
- #10-32 weldnuts are provided for mounting optional panel
- External mounting feet are provided for secure wall mounting

Discount Schedule: C2

Subclass: DE1

Notes: We can provide special sizes, finishes and other modifications. Consult the factory for your special requirements.

JIC Enclosures
Type 12 Continuous Hinge Quick-Release Cover
Illustration Sheet and Catalog Number

Enclosure	Enclosure Size Height x Width x Depth A x B x C		D		Panel Catalog Number		Panel Size Height x Width	
Catalog Number	in.	mm	in.	mm	Solid	Perforated	in.	mm
643-12CHQRC	6.00 x 4.00 x 3.00	152 x 102 x 76	3.00	76	AW64P	AW64PP	4.87 x 2.87	124 x 73
863.5-12CHQRC	8.00 x 6.00 x 3.50	203 x 152 x 102	4.00	102	AW86P	AW86PP	6.87 x 4.87	174 x 124
664-12CHQRC	6.00 x 6.00 x 4.00	152 x 152 x 102	3.00	76	AW66P	AW66PP	4.87 x 4.87	124 x 124
1084-12CHQRC	10.00 x 8.00 x 4.00	254 x 203 x 102	2.00	51	AW108P	AW108PP	8.87 x 6.87	225 x 174
12105-12CHQRC	12.00 x 10.00 x 5.00	305 x 254 x 127	3.00	76	AW1210P	AW1210PP	10.87 x 8.87	272 x 225
14126-12CHQRC	14.00 x 12.00 x 6.00	356 x 305 x 152	3.00	76	AW1412P	AW1412PP	12.87 x 10.87	327 x 272
16146-12CHQRC	16.00 x 14.00 x 6.00	406 x 356 x 152	3.00	76	AW1614P	AW1614PP	14.87 x 12.87	378 x 327

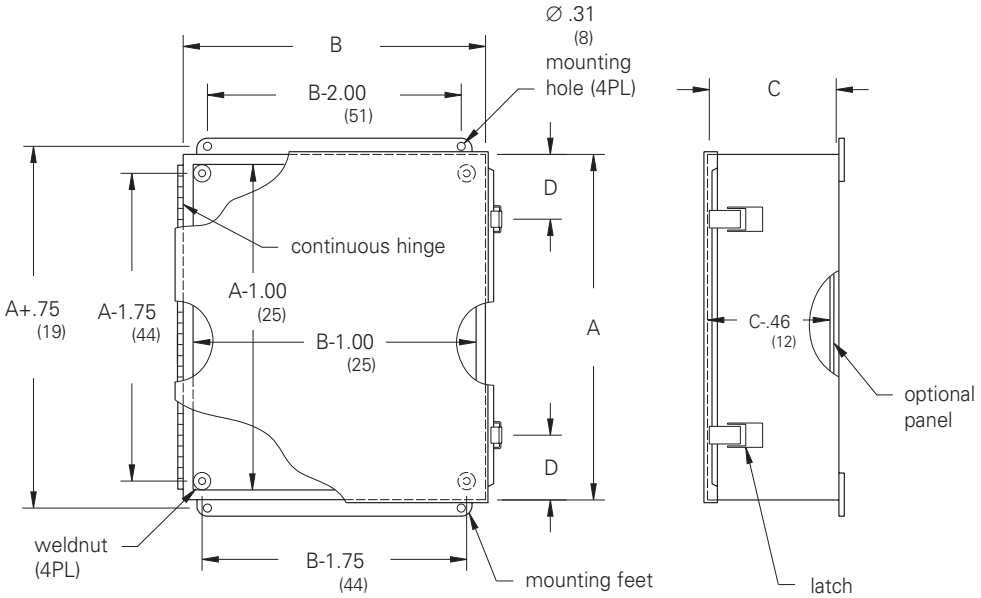

Front View

Side View

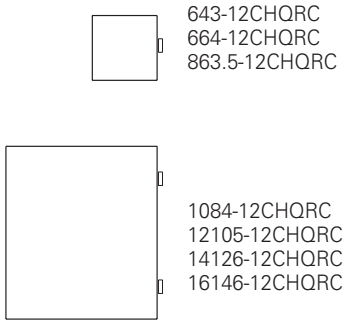

Cover Clamp Layout

Notes: Dimensions are in inches. Millimeters shown are for reference only. Data subject to change without notice.

JIC Enclosures
Type 12 Large Continuous Hinge Screw Cover
Data Sheet

Application
- Houses electrical controls and instruments
- Protects against circulating dust, falling dirt and dripping non-corrosive liquids

Standards
- UL 508A listed, Type 12 and Type 13
- CSA C22.2 No.94 certified, Type 12 and Type 13
- Conforms to NEMA standard for Type 12 and Type 13

Finish
- Wash and phosphate undercoat
- ANSI 61 gray polyester powder finish
- Panels have a white enamel finish

Accessories
- NEMA terminal strap kit
- Terminal blocks
- Touch-up paint
- See Accessories section

Construction
- Enclosure and door are fabricated from (14) gauge steel
- All continuous welded seams are finished smooth
- Door is secured to the body with a continuous hinge on one side and captive hex head screws which thread into sealed well nuts on the opposite side
- Each door has a print pocket
- Door has a fixed, oil-resistant gasket
- Ground stud provided on door
- Heavy gauge panel mounted to .375-16 collar studs is provided with enclosure
- External mounting feet are provided for secure wall mounting

Discount Schedule: C2

Subclass: DH0

Notes: We can provide special sizes, finishes and other modifications. Consult the factory for your special requirements.

JIC Enclosures
Type 12 Large Continuous Hinge Screw Cover
Illustration Sheet and Catalog Number

Enclosure Catalog Number	Enclosure Size Height x Width x Depth A x B x C		Panel Catalog Number		Panel Size Height x Width	
Type 304	in.	mm	Painted	Conductive	in. mm	in. mm
20167-12CHSC	20.00 x 16.00 x 7.00	508 x 406 x 178	AW2016P	AW2016GP	17.00 x 13.00	432 x 330
20207-12CHSC	20.00 x 20.00 x 7.00	508 x 508 x 178	AW2020P	AW2020GP	17.00 x 17.00	432 x 432
24207-12CHSC	24.00 x 20.00 x 7.00	610 x 508 x 178	AW2420P	AW2420GP	20.87 x 16.87	530 x 428
30207-12CHSC	30.00 x 20.00 x 7.00	762 x 508 x 178	AW3020P	AW3020GP	26.87 x 16.87	682 x 428
30247-12CHSC	30.00 x 24.00 x 7.00	762 x 610 x 178	AW3024P	AW3024GP	26.87 x 20.87	682 x 530
36247-12CHSC	36.00 x 24.00 x 7.00	914 x 610 x 178	AW3624P	AW3624GP	32.87 x 20.87	835 x 530
24209-12CHSC	24.00 x 20.00 x 9.00	610 x 508 x 229	AW2420P	AW2420GP	20.87 x 16.87	530 x 428
30209-12CHSC	30.00 x 20.00 x 9.00	762 x 508 x 229	AW3020P	AW3020GP	26.87 x 16.87	682 x 428
30249-12CHSC	30.00 x 24.00 x 9.00	762 x 610 x 229	AW3024P	AW3024GP	26.87 x 20.87	682 x 530
36249-12CHSC	36.00 x 24.00 x 9.00	914 x 610 x 229	AW3624P	AW3624GP	32.87 x 20.87	835 x 530

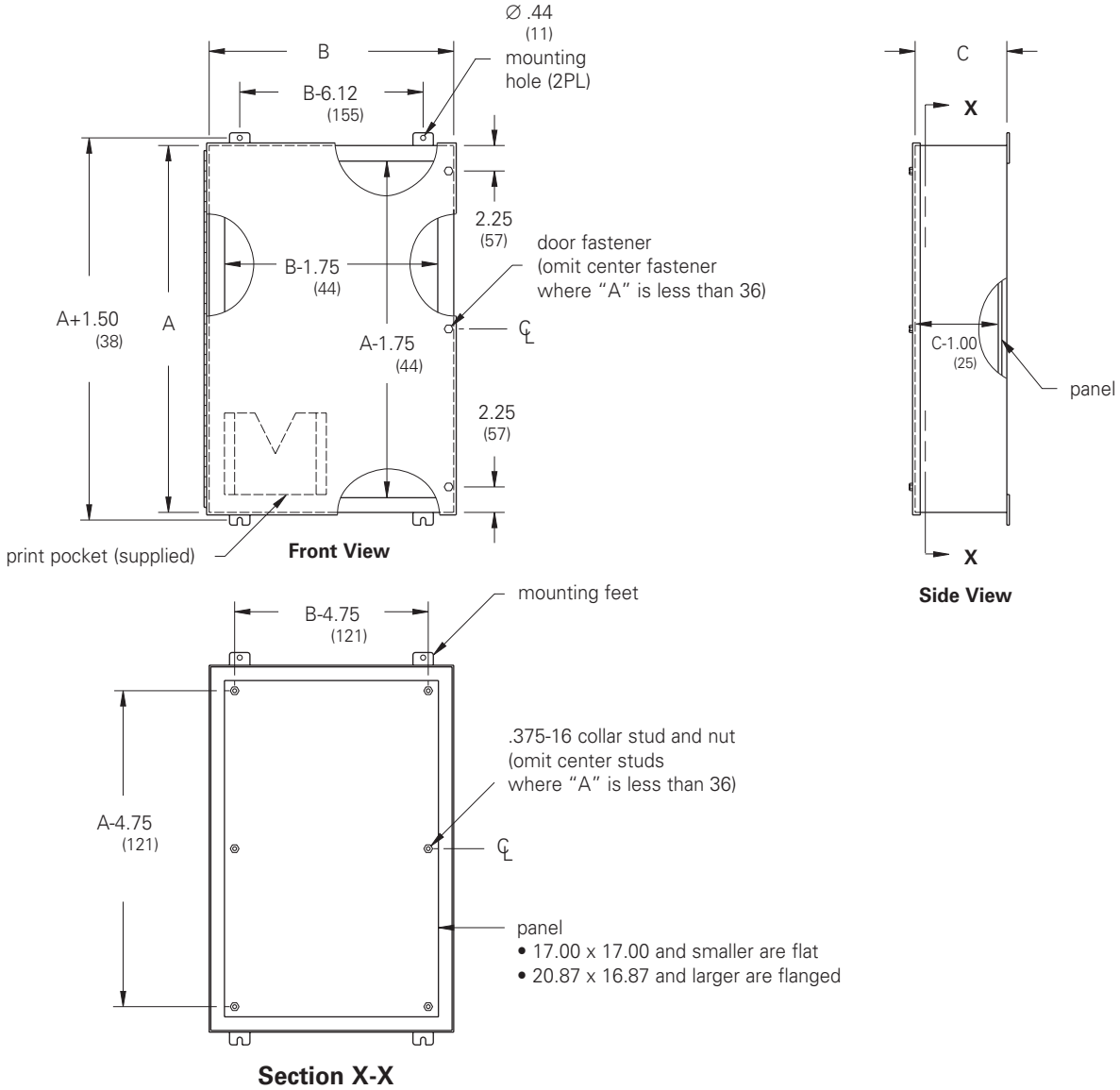

Notes: Dimensions are in inches. Millimeters shown are for reference only. Data subject to change without notice.

JIC Enclosures
Type 12 Continuous Hinge Flanged Trough Cover
Data Sheet

Application
- Houses electrical controls and instruments
- Protects against circulating dust, falling dirt and dripping non-corrosive liquids

Standards
- UL 508A Listed, Type 12 and Type 13
- CSA C22.2 No. 94 certified, Type 12 and Type 13
- Conforms to NEMA standard for Type 12 and Type 13

Finish
- Wash and phosphate undercoat
- ANSI 61 gray polyester powder finish
- Optional panels have a white enamel finish

Accessories
- Panels
- JIC terminal strap kit
- JIC terminal strip kit
- JIC terminal blocks
- Touch-up paint
- #8-32 self tapping screw (10168)

Construction
- Enclosure and door are fabricated from 16 gauge steel
- Body flange trough design, formed around body opening, diverts liquid contaminants away from door opening
- Cover has a seamless poured in-place gasket
- Integral compression stop to prevent over compression of gasket for optimal gasket performance
- Ground stud provided on door
- Door is secured to the body with a continuous hinge on one side and heavy-duty latches on the opposite side
- #10-32 weldnuts are provided for mounting optional panels
- External mounting feet are provided for secure wall mounting

Discount Schedule: C2

Subclass: DE1

Notes: We can provide special sizes, finishes and other modifications. Consult the factory for your special requirements.

JIC Enclosures
Type 12 Continuous Hinge Flanged Trough Cover
Illustration Sheet and Catalog Number

Enclosure Catalog Number	Enclosure Size Height x Width x Depth A x B x C in.	mm	D in.	mm	Panel Catalog Number Solid	Perforated	Panel Size Height x Width in.	mm
644-FTC	6.00 x 4.00 x 4.54	152 x 102 x 115	3.00	76	**AW64P**	**AW64PP**	4.87 x 2.87	124 x 73
664-FTC	6.00 x 6.00 x 4.54	152 x 152 x 115	3.00	76	**AW66P**	**AW66PP**	4.87 x 4.87	124 x 124
864-FTC	8.00 x 6.00 x 4.54	203 x 152 x 115	2.00	51	**AW86P**	**AW86PP**	6.87 x 4.87	174 x 124
1084-FTC	10.00 x 8.00 x 4.54	254 x 203 x 115	2.00	51	**AW108P**	**AW108PP**	8.87 x 6.87	225 x 174
12105-FTC	12.00 x 10.00 x 5.54	305 x 254 x 141	2.00	51	**AW1210P**	**AW1210PP**	10.87 x 8.87	272 x 225
14126-FTC	14.00 x 12.00 x 6.54	356 x 305 x 166	2.00	51	**AW1412P**	**AW1412PP**	12.87 x 10.87	327 x 272
16146-FTC	16.00 x 14.00 x 6.54	406 x 356 x 166	2.00	51	**AW1614P**	**AW1614PP**	14.87 x 12.87	378 x 327

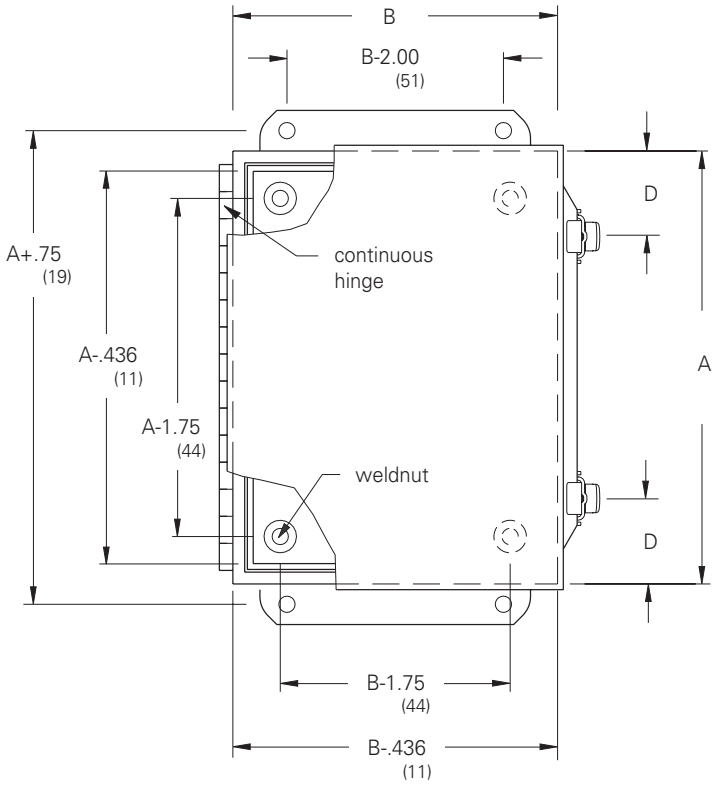

Front View

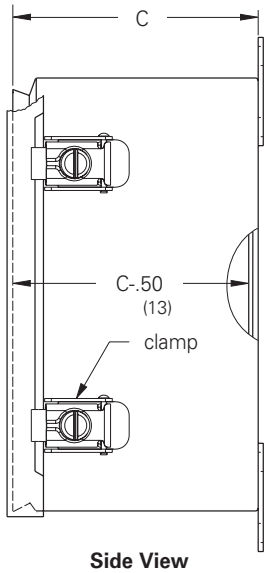

Side View

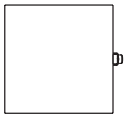

644 FTC
664 FTC

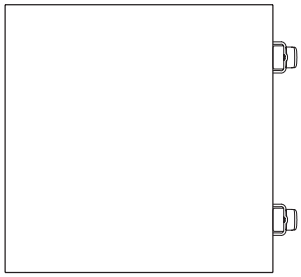

864 FTC
1084 FTC
12105 FTC
14126 FTC
16146 FTC

Cover Clamp Layout

Notes: Dimensions are in inches. Millimeters shown are for reference only. Data subject to change without notice.

Wall-Mount Enclosures
Type 12 Single-Door
Data Sheet

Application
- Houses electrical controls and instruments
- Protects against circulating dust, falling dirt and dripping non-corrosive liquids

Standards
- UL 508A listed, Type 12 and Type 13
- CSA C22.2 No.94 certified, Type 12 and Type 13
- Conforms to NEMA standard for Type 12 and Type 13

Finish
- Wash and phosphate undercoat
- ANSI 61 gray polyester powder finish

Accessories
- Panels
- NEMA terminal strap kit
- Terminal blocks
- Type 12 door handle kit
- Floor stand kit
- Touch-up paint
- See Accessories section

Construction
- Enclosure and door are fabricated from code gauge steel, (see tables, pages 106 & 107)
- All continuous welded seams are finished smooth
- Doors are secured to the body with a heavy-duty continuous hinge on one side and easy-to-release door clamps mounted to the opposite side
- Each door has a padlock hasp with sealing hole provision
- Print pocket provided
- Door has a seamless poured in-place gasket
- Ground stud provided on door and body
- Formed lip around enclosure opening diverts liquids and contaminants
- .375-16 collar studs are provided for mounting optional panel
- External mounting feet are provided for secure wall mounting

Discount Schedule: C2

Subclass: DH0

Notes: We can provide special sizes, finishes and other modifications. Consult the factory for your special requirements.

Wall-Mount Enclosures
Type 12 Single-Door
Illustration Sheet

See pages 106 & 107 for dimensions

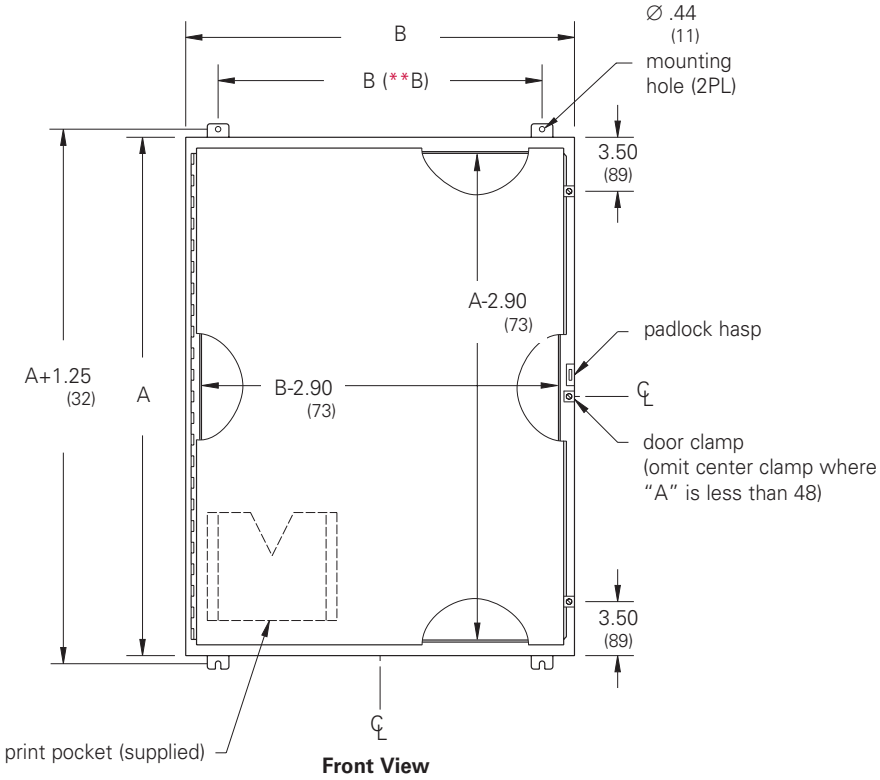

Front View

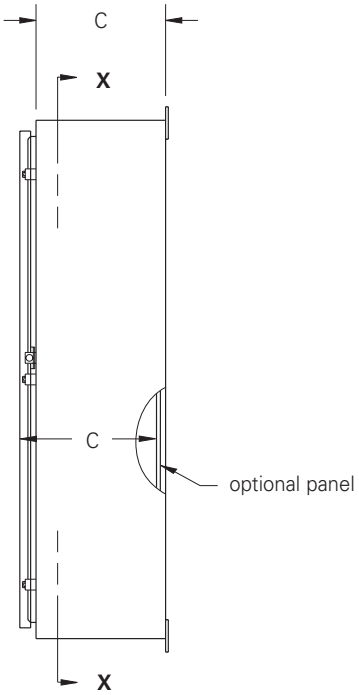

Side View

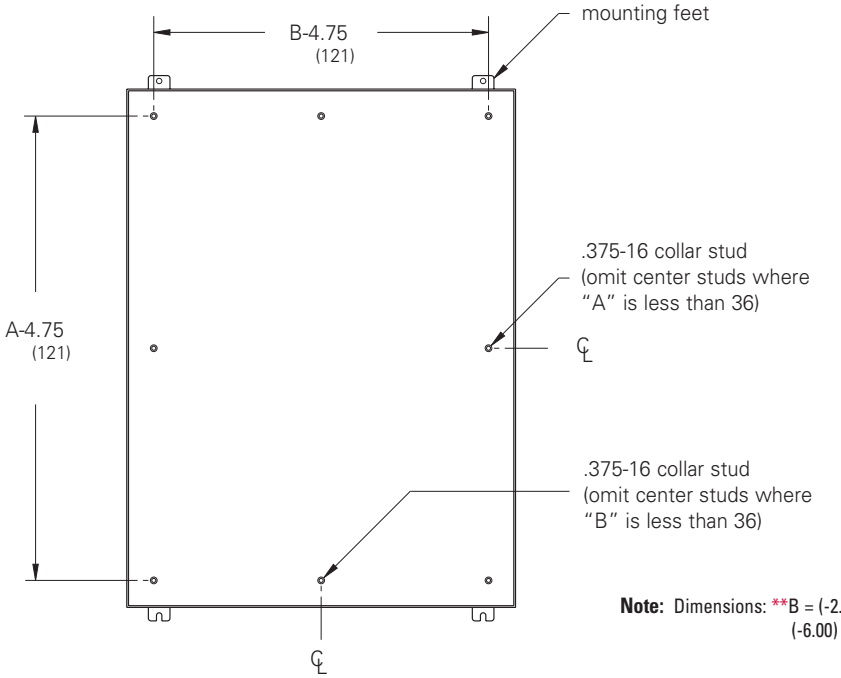

Note: Dimensions: **B = (-2.50) if 12 inches wide;
(-6.00) if wider than 12 inches.

Section X-X

Notes: Dimensions are in inches. Millimeters shown are for reference only. Data subject to change without notice.

Wall-Mount Enclosures
Type 12 Single-Door
Catalog Number

Enclosure Catalog Number	Enclosure Size Height x Width x Depth A x B x C in.	mm	Gauge	Panel Catalog Number Painted	Conductive	Panel Size Height x Width in.	mm
12246-12	12.00 x 24.00 x 6.00	305 x 610 x 152	16	AW2412P	—	9.00 x 21.00	229 x 533
16126-12	16.00 x 12.00 x 6.00	406 x 305 x 152	16	AW1612P	AW1612GP	13.00 x 9.00	330 x 229
16166-12	16.00 x 16.00 x 6.00	406 x 406 x 152	16	AW1616P	AW1616GP	13.00 x 13.00	330 x 330
16206-12	16.00 x 20.00 x 6.00	406 x 508 x 152	16	AW2016P	AW2016GP	13.00 x 17.00	330 x 432
20126-12	20.00 x 12.00 x 6.00	508 x 305 x 152	16	AW2012P	—	17.00 x 9.00	432 x 229
20166-12	20.00 x 16.00 x 6.00	508 x 406 x 152	16	AW2016P	AW2016GP	17.00 x 13.00	432 x 330
20206-12	20.00 x 20.00 x 6.00	508 x 508 x 152	16	AW2020P	AW2020GP	17.00 x 17.00	432 x 432
20246-12	20.00 x 24.00 x 6.00	508 x 610 x 152	16	AW2420P	AW242G0P	16.87 x 20.87	428 x 530
24126-12	24.00 x 12.00 x 6.00	610 x 305 x 152	16	AW2412P	—	21.00 x 9.00	533 x 229
24166-12	24.00 x 16.00 x 6.00	610 x 406 x 152	16	AW2416P	AW2416GP	21.00 x 13.00	533 x 330
24206-12	24.00 x 20.00 x 6.00	610 x 508 x 152	16	AW2420P	AW2420GP	20.87 x 16.87	530 x 428
24246-12	24.00 x 24.00 x 6.00	610 x 610 x 152	14	AW2424P	AW2424GP	20.87 x 20.87	530 x 530
30166-12	30.00 x 16.00 x 6.00	762 x 406 x 152	16	AW3016P	AW3016GP	26.87 x 12.87	682 x 327
30206-12	30.00 x 20.00 x 6.00	762 x 508 x 152	14	AW3020P	AW3020GP	26.87 x 16.87	682 x 428
30246-12	30.00 x 24.00 x 6.00	762 x 610 x 152	14	AW3024P	AW3024GP	26.87 x 20.87	682 x 530
36246-12	36.00 x 24.00 x 6.00	914 x 610 x 152	14	AW3624P	AW3624GP	32.87 x 20.87	835 x 530
36306-12	36.00 x 30.00 x 6.00	914 x 762 x 152	14	AW3630P	AW3630GP	32.87 x 26.87	835 x 682
12248-12	12.00 x 24.00 x 8.00	305 x 610 x 203	16	AW2412P	—	9.00 x 21.00	229 x 533
16128-12	16.00 x 12.00 x 8.00	406 x 305 x 203	16	AW1612P	AW1612GP	13.00 x 9.00	330 x 229
16168-12	16.00 x 16.00 x 8.00	406 x 406 x 203	16	AW1616P	AW1616GP	13.00 x 13.00	330 x 330
16208-12	16.00 x 20.00 x 8.00	406 x 508 x 203	16	AW2016P	AW2016GP	13.00 x 17.00	330 x 432
20128-12	20.00 x 12.00 x 8.00	508 x 305 x 203	16	AW2012P	—	17.00 x 9.00	432 x 229
20168-12	20.00 x 16.00 x 8.00	508 x 406 x 203	16	AW2016P	AW2016GP	17.00 x 13.00	432 x 330
20208-12	20.00 x 20.00 x 8.00	508 x 508 x 203	16	AW2020P	AW2020GP	17.00 x 17.00	432 x 432
20248-12	20.00 x 24.00 x 8.00	508 x 610 x 203	16	AW2420P	AW2420GP	16.87 x 20.87	428 x 530
24128-12	24.00 x 12.00 x 8.00	610 x 305 x 203	16	AW2412P	—	21.00 x 9.00	533 x 229
24168-12	24.00 x 16.00 x 8.00	610 x 406 x 203	16	AW2416P	AW2416GP	21.00 x 13.00	533 x 330
24208-12	24.00 x 20.00 x 8.00	610 x 508 x 203	16	AW2420P	AW2420GP	20.87 x 16.87	530 x 428
24248-12	24.00 x 24.00 x 8.00	610 x 610 x 203	14	AW2424P	AW2424GP	20.87 x 20.87	530 x 530
24308-12	24.00 x 30.00 x 8.00	610 x 762 x 203	14	AW3024P	AW3024GP	20.87 x 26.87	530 x 682
30208-12	30.00 x 20.00 x 8.00	762 x 508 x 203	14	AW3020P	AW3020GP	26.87 x 16.87	682 x 428
30248-12	30.00 x 24.00 x 8.00	762 x 610 x 203	14	AW3024P	AW3024GP	26.87 x 20.87	682 x 530
30308-12	30.00 x 30.00 x 8.00	762 x 762 x 203	14	AW3030P	AW3030GP	26.87 x 26.87	682 x 682
30368-12	30.00 x 36.00 x 8.00	762 x 914 x 203	14	AW3630P	AW3630GP	26.87 x 32.87	682 x 835
36248-12	36.00 x 24.00 x 8.00	914 x 610 x 203	14	AW3624P	AW3624GP	32.87 x 20.87	835 x 530
36308-12	36.00 x 30.00 x 8.00	914 x 762 x 203	14	AW3630P	AW3630GP	32.87 x 26.87	835 x 682
36368-12	36.00 x 36.00 x 8.00	914 x 914 x 203	14	AW3636P	—	32.87 x 32.87	835 x 835
42248-12	42.00 x 24.00 x 8.00	1067 x 670 x 203	14	AW4224P	—	38.87 x 20.87	987 x 530
42308-12	42.00 x 30.00 x 8.00	1067 x 762 x 203	14	AW4230P	AW4230GP	38.87 x 26.87	987 x 682
42368-12	42.00 x 36.00 x 8.00	1067 x 914 x 203	14	AW4236P	AW4236GP	38.87 x 32.87	987 x 835
48248-12	48.00 x 24.00 x 8.00	1219 x 610 x 203	14	AW4824P	—	44.87 x 20.87	1140 x 530
48308-12	48.00 x 30.00 x 8.00	1219 x 762 x 203	14	AW4830P	AW4830GP	44.87 x 26.87	1140 x 682
48368-12	48.00 x 36.00 x 8.00	1219 x 914 x 203	14	AW4836P	AW4836GP	44.87 x 32.87	1140 x 835
60368-12	60.00 x 36.00 x 8.00	1524 x 914 x 203	14	AW6036P	AW6036GP	56.87 x 32.87	1444 x 835

Notes: Dimensions are in inches. Millimeters shown are for reference only. Data subject to change without notice.

Wall-Mount Enclosures
Type 12 Single-Door
Catalog Number (cont'd)

Enclosure	Enclosure Size Height x Width x Depth A x B x C			Panel Catalog Number		Panel Size Height x Width	
Catalog Number	in.	mm	Gauge	Painted	Conductive	in.	mm
161210-12	16.00 x 12.00 x 10.00	406 x 305 x 254	16	AW1612P	AW1612GP	13.00 x 9.00	330 x 229
201610-12	20.00 x 16.00 x 10.00	508 x 406 x 254	16	AW2016P	AW2016GP	17.00 x 13.00	432 x 330
202010-12	20.00 x 20.00 x 10.00	508 x 508 x 254	16	AW2020P	AW2020GP	17.00 x 17.00	432 x 432
241210-12	24.00 x 12.00 x 10.00	610 x 305 x 254	16	AW2412P	—	21.00 x 9.00	533 x 229
242010-12	24.00 x 20.00 x 10.00	610 x 508 x 254	16	AW2420P	AW2420GP	20.87 x 16.87	530 x 428
242410-12	24.00 x 24.00 x 10.00	610 x 610 x 254	14	AW2424P	AW2424GP	20.87 x 20.87	530 x 530
302010-12	30.00 x 20.00 x 10.00	762 x 508 x 254	14	AW3020P	AW3020GP	26.87 x 16.87	682 x 428
302410-12	30.00 x 24.00 x 10.00	762 x 610 x 254	14	AW3024P	AW3024GP	26.87 x 20.87	682 x 530
362410-12	36.00 x 24.00 x 10.00	914 x 610 x 254	14	AW3624P	AW3624GP	32.87 x 20.87	835 x 530
363010-12	36.00 x 30.00 x 10.00	914 x 762 x 254	14	AW3630P	AW3630GP	32.87 x 26.87	835 x 682
423010-12	42.00 x 30.00 x 10.00	1067 x 762 x 254	14	AW4230P	AW4230GP	38.87 x 26.87	987 x 682
423610-12	42.00 x 36.00 x 10.00	1067 x 914 x 254	14	AW4236P	AW4236GP	38.87 x 32.87	987 x 835
483010-12	48.00 x 30.00 x 10.00	1219 x 762 x 254	14	AW4830P	AW4830GP	44.87 x 26.87	1140 x 682
483610-12	48.00 x 36.00 x 10.00	1219 x 914 x 254	14	AW4836P	AW4836GP	44.87 x 32.87	1140 x 835
603610-12	60.00 x 36.00 x 10.00	1524 x 914 x 254	14	AW6036P	AW6036GP	56.87 x 32.87	1444 x 835
201612-12	20.00 x 16.00 x 12.00	508 x 406 x 305	16	AW2016P	AW2016GP	17.00 x 13.00	432 x 330
242012-12	24.00 x 20.00 x 12.00	610 x 508 x 305	16	AW2420P	AW2420GP	20.87 x 16.87	530 x 428
242412-12	24.00 x 24.00 x 12.00	610 x 610 x 305	14	AW2424P	AW2424GP	20.87 x 20.87	530 x 530
302412-12	30.00 x 24.00 x 12.00	762 x 610 x 305	14	AW3024P	AW3024GP	26.87 x 20.87	682 x 530
303012-12	30.00 x 30.00 x 12.00	762 x 762 x 305	14	AW3030P	AW3030GP	26.87 x 26.87	682 x 682
362412-12	36.00 x 24.00 x 12.00	914 x 610 x 305	14	AW3624P	AW3624GP	32.87 x 20.87	835 x 530
363012-12	36.00 x 30.00 x 12.00	914 x 762 x 305	14	AW3630P	AW3630GP	32.87 x 26.87	835 x 682
363612-12	36.00 x 36.00 x 12.00	914 x 914 x 305	14	AW3636P	—	32.87 x 32.87	835 x 835
423012-12	42.00 x 30.00 x 12.00	1067 x 762 x 305	14	AW4230P	AW4230GP	38.87 x 26.87	987 x 682
423612-12	42.00 x 36.00 x 12.00	1067 x 914 x 305	14	AW4236P	AW4236GP	38.87 x 32.87	987 x 835
483612-12	48.00 x 36.00 x 12.00	1219 x 914 x 305	14	AW4836P	AW4836GP	44.87 x 32.87	1140 x 835
603612-12	60.00 x 36.00 x 12.00	1524 x 914 x 305	14	AW6036P	AW6036GP	56.87 x 32.87	1444 x 835
723612-12	72.00 x 36.00 x 12.00	1829 x 914 x 305	14	AW7236P	—	68.87 x 32.87	1749 x 835
242016-12	24.00 x 20.00 x 16.00	610 x 508 x 406	16	AW2420P	AW2420GP	20.87 x 16.87	530 x 428
242416-12	24.00 x 24.00 x 16.00	610 x 610 x 406	14	AW2424P	AW2424GP	20.87 x 20.87	530 x 530
302416-12	30.00 x 24.00 x 16.00	762 x 610 x 406	14	AW3024P	AW3024GP	26.87 x 20.87	682 x 530
363016-12	36.00 x 30.00 x 16.00	914 x 762 x 406	14	AW3630P	AW3630GP	32.87 x 26.87	835 x 682
423616-12	42.00 x 36.00 x 16.00	1067 x 914 x 406	14	AW4236P	AW4236GP	38.87 x 32.87	987 x 835
483616-12	48.00 x 36.00 x 16.00	1219 x 914 x 406	14	AW4836P	AW4836GP	44.87 x 32.87	1140 x 835
603616-12	60.00 x 36.00 x 16.00	1524 x 914 x 406	14	AW6036P	AW6036GP	56.87 x 32.87	1444 x 835
723016-12	72.00 x 30.00 x 16.00	1829 x 762 x 406	14	AW7230P	—	68.87 x 26.87	1749 x 682
302420-12	30.00 x 24.00 x 20.00	762 x 610 x 508	14	AW3024P	AW3024GP	26.87 x 20.87	682 x 530
363020-12	36.00 x 30.00 x 20.00	914 x 762 x 508	14	AW3630P	AW3630GP	32.87 x 26.87	835 x 682
483620-12	48.00 x 36.00 x 20.00	1219 x 914 x 508	14	AW4836P	AW4836GP	44.87 x 32.87	1140 x 835
603620-12	60.00 x 36.00 x 20.00	1524 x 914 x 508	14	AW6036P	AW6036GP	56.87 x 32.87	1444 x 835
723020-12	72.00 x 30.00 x 20.00	1829 x 762 x 508	14	AW7230P	—	68.87 x 26.87	1749 x 682
302424-12	30.00 x 24.00 x 24.00	762 x 610 x 610	14	AW3024P	AW3024GP	26.87 x 20.87	682 x 530
723024-12	72.00 x 30.00 x 24.00	1829 x 762 x 610	14	AW7230P	—	68.87 x 26.87	1749 x 682

Notes: Dimensions are in inches. Millimeters shown are for reference only. Data subject to change without notice.

Wall-Mount Enclosures
Type 12 Terminal
Data Sheet

Application
- Houses and protects wiring terminals
- Protects against circulating dust, falling dirt and dripping non-corrosive liquids

Standards
- UL 508A listed, Type 12 and Type 13
- CSA C22.2 No.94 certified, Type 12 and Type 13
- Conforms to NEMA standard for Type 12 and Type 13

Finish
- Wash and phosphate undercoat
- ANSI 61 gray polyester powder finish
- Terminal strap assembly has an electrogalvanized finish

Accessories
- Panels
- Extra strap kit
- Terminal blocks
- Type 12 door handle kit
- Floor stand kit
- Touch-up paint
- See Accessories section

Construction
- Enclosure and door are fabricated from code gauge steel, (see table, page 109)
- All continuous welded seams are finished smooth
- Doors are secured to the body with a heavy-duty continuous hinge on one side and easy-to-release door clamps mounted to the opposite side
- Each door has a padlock hasp with sealing hole provision
- Print pocket provided
- Door has a seamless poured in-place gasket
- Ground stud provided on door and body
- Formed lip around enclosure opening diverts liquids and contaminants
- Removable terminal strap assembly is installed on .375-16 collar studs and used for mounting optional terminal blocks, (order terminal blocks separately)
- External mounting feet are provided for secure wall mounting

Discount Schedule: C2

Subclass: DH0

Notes: We can provide special sizes, finishes and other modifications. Consult the factory for your special requirements.

Wall-Mount Enclosures
Type 12 Terminal
Illustration Sheet and Catalog Number

Enclosure Catalog Number	Enclosure Size Height x Width x Depth A x B x C in.	mm	Gauge	D in.	mm	Quantity of straps
16126-12TE	16.00 x 12.00 x 6.00	406 x 305 x 152	16	11.50	292	2
20166-12TE	20.00 x 16.00 x 6.00	508 x 406 x 152	16	15.50	394	3
20206-12TE	20.00 x 20.00 x 6.00	508 x 508 x 152	16	15.50	394	4
24206-12TE	24.00 x 20.00 x 6.00	610 x 508 x 152	16	19.50	495	4
24246-12TE	24.00 x 24.00 x 6.00	610 x 610 x 152	14	19.50	495	5
30206-12TE	30.00 x 20.00 x 6.00	762 x 508 x 152	14	25.50	648	4
30246-12TE	30.00 x 24.00 x 6.00	762 x 610 x 152	14	25.50	648	5
36246-12TE	36.00 x 24.00 x 6.00	914 x 610 x 152	14	31.50	800	5
36308-12TE	36.00 x 30.00 x 8.00	914 x 762 x 203	14	31.50	800	6
42308-12TE	42.00 x 30.00 x 8.00	1067 x 762 x 203	14	37.50	953	6
48368-12TE	48.00 x 36.00 x 8.00	1219 x 914 x 203	14	43.50	1105	7
60368-12TE	60.00 x 36.00 x 8.00	1524 x 914 x 203	14	55.50	1410	7

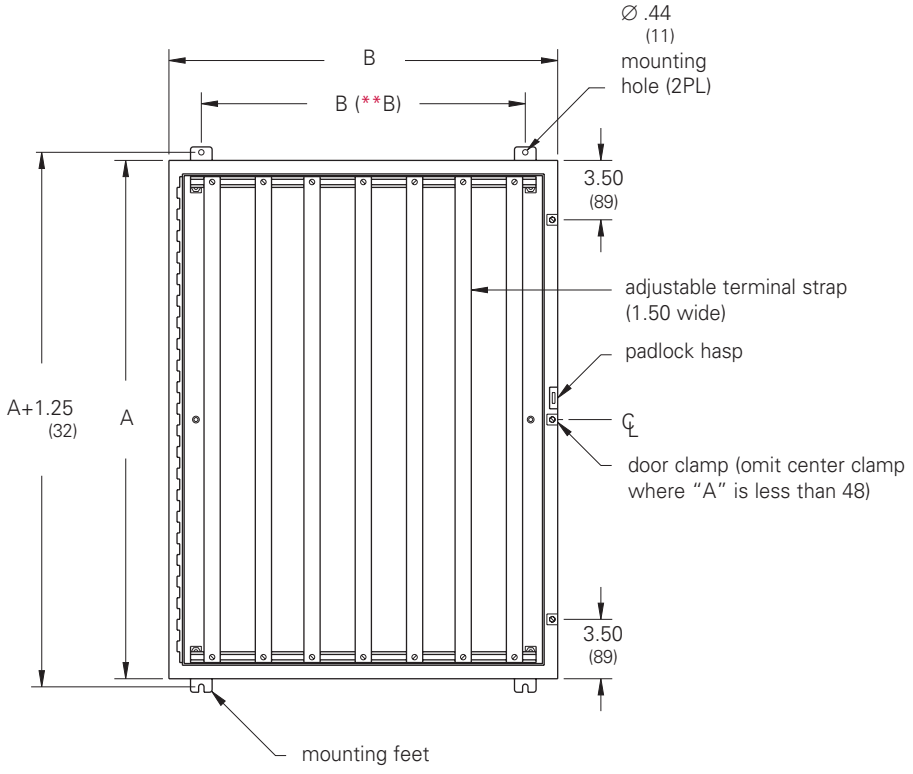

Front View
(door removed)

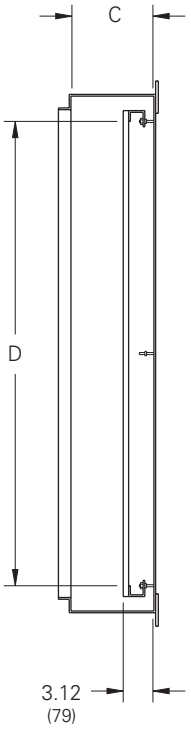

Side Section View

Note: Dimensions: **B = (-2.50) if 12 inches wide;
(-6.00) if wider than 12 inches.

Notes: Dimensions are in inches. Millimeters shown are for reference only. Data subject to change without notice.

Wall-Mount Enclosures
Type 12 Double-Door with 3-Point Locking
Data Sheet and Catalog Number

Application
- Houses electrical controls and instruments
- Protects against circulating dust, falling dirt and dripping non-corrosive liquids

Standards
- UL 508A listed, Type 12 and Type 13
- CSA C22.2 No.94 certified, Type 12 and Type 13
- Conforms to NEMA standard for Type 12 and Type 13

Finish
- Wash and phosphate undercoat
- ANSI 61 gray polyester powder finish

Accessories
- Panels
- NEMA terminal strap kit
- Terminal blocks
- Floor stand kit
- Touch-up paint
- Replacement handle, 00011184A (see page 427).
- See Accessories section

Construction
- Enclosure and door are fabricated from (14) gauge steel
- All continuous welded seams are finished smooth
- Doors are secured to the body with a heavy-duty continuous hinge and a center locating 3-point padlock handle mechanism which closes the right side door over the left
- Print pocket provided
- Doors have a gasket
- Ground stud provided on door and body
- No center post for complete front access
- .375-16 collar studs are provided for mounting optional panel
- External mounting feet are provided for secure wall mounting

Discount Schedule: C2

Subclass: DK0

Enclosure	Enclosure Size Height x Width x Depth A x B x C		Panel	Panel Size Height x Width	
Catalog Number		in.	Catalog Number	in.	mm
24428-12D	24.00 x 42.00 x 8.00	610 x 1067 x 203	AW4224P	20.87 x 38.87	530 x 987
24488-12D	24.00 x 48.00 x 8.00	610 x 1219 x 203	AW4824P	20.87 x 44.87	530 x 1140
304210-12D	30.00 x 42.00 x 10.00	762 x 1067 x 254	AW4230P	26.87 x 38.87	682 x 987
304810-12D	30.00 x 48.00 x 10.00	762 x 1219 x 254	AW4830P	26.87 x 44.87	682 x 1140
306010-12D	30.00 x 60.00 x 10.00	762 x 1524 x 254	AW6030P	26.87 x 56.87	682 x 1444
364212-12D	36.00 x 42.00 x 12.00	914 x 1067 x 305	AW4236P	32.87 x 38.87	835 x 987
364812-12D	36.00 x 48.00 x 12.00	914 x 1219 x 305	AW4836P	32.87 x 44.87	835 x 1140
366012-12D	36.00 x 60.00 x 12.00	914 x 1524 x 305	AW6036P	32.87 x 56.87	835 x 1444
424212-12D	42.00 x 42.00 x 12.00	1067 x 1067 x 305	AW4242P	38.87 x 38.87	987 x 987
424812-12D	42.00 x 48.00 x 12.00	1067 x 1219 x 305	AW4842P	38.87 x 44.87	987 x 1140
426012-12D	42.00 x 60.00 x 12.00	1067 x 1524 x 305	AW6042P	38.87 x 56.87	987 x 1444
484812-12D	48.00 x 48.00 x 12.00	1219 x 1219 x 305	AW4848P	44.87 x 44.87	1140 x 1140

Notes: We can provide special sizes, finishes and other modifications. Consult the factory for your special requirements.

Wall-Mount Enclosures
Type 12 Double-Door with 3-Point Locking
Illustration Sheet

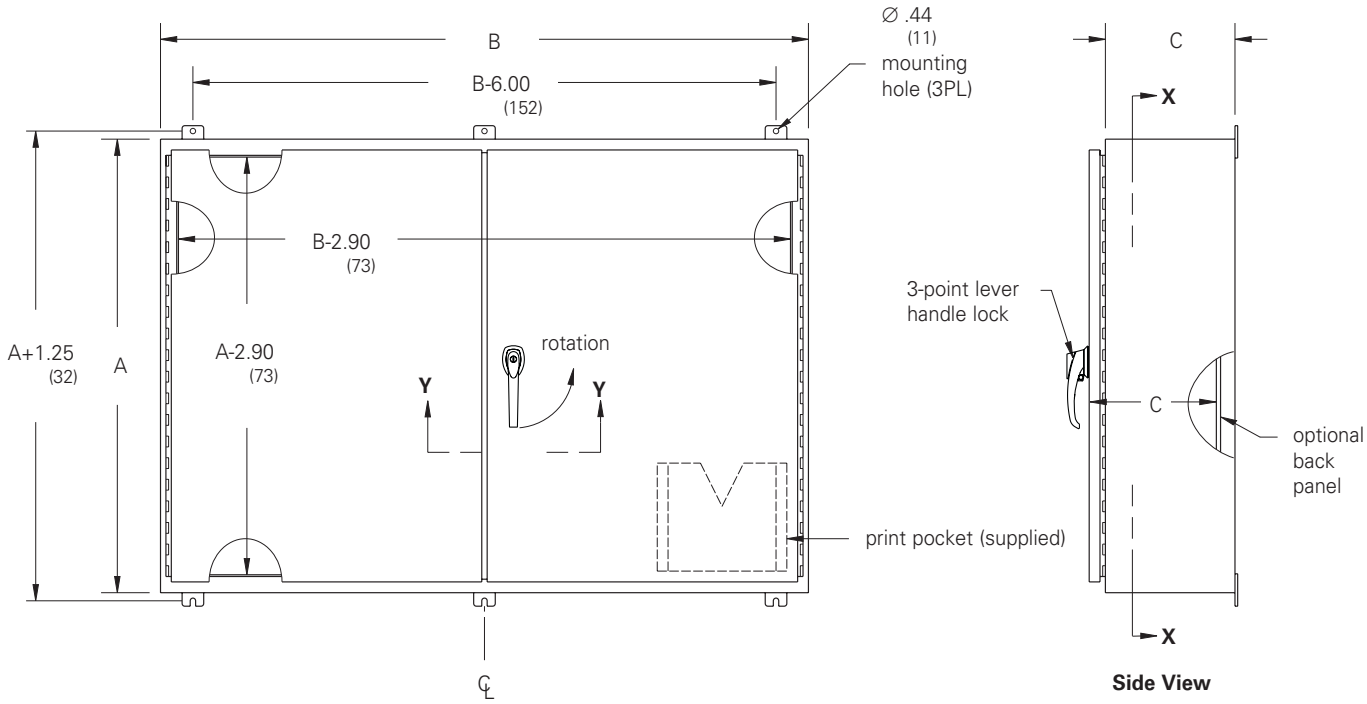

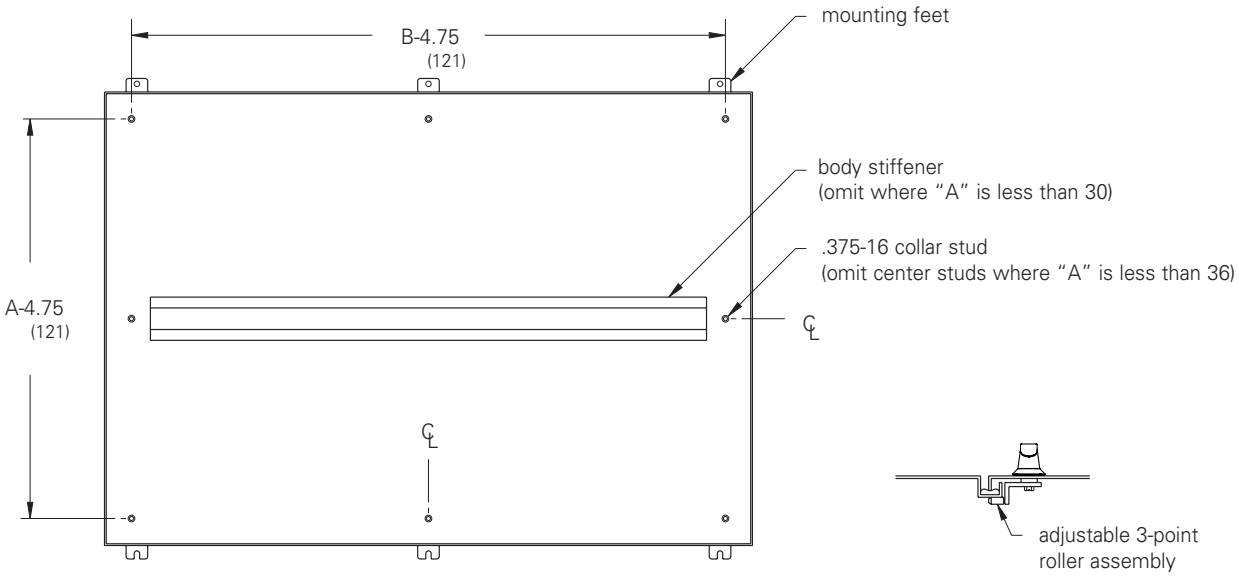

Notes: Dimensions are in inches. Millimeters shown are for reference only. Data subject to change without notice.

Ground-Mount Enclosures
Type 12 Double-Door Floor-Standing with 3-Point Locking
Data Sheet and Catalog Number

Application
- Houses electrical controls and instruments
- Protects against circulating dust, falling dirt and dripping non-corrosive liquids

Standards
- UL 508A listed, Type 12
- CSA C22.2 No.94 certified, Type 12
- Conforms to NEMA standard for Type 12

Finish
- Wash and phosphate undercoat
- ANSI 61 gray polyester powder finish

Accessories
- Panels
- Leg stabilizer kit
- Touch-up paint
- Replacement handle, BD-PKHB, (see page 429)
- See Accessories section

Construction
- Enclosure and door are fabricated from (12) gauge steel
- All continuous welded seams are finished smooth
- Doors are secured to the body with removable concealed hinges and a center locating 3-point key-locking and padlock handle mechanism which closes the right side door over the left door
- Modern bevel profile on hinge side of enclosure doors
- Print pocket provided
- Doors have an oil-resistant gasket
- Ground stud provided on doors and body
- No center post for complete front access
- Heavy gauge panel supports and .375-16 collar studs are provided for mounting optional panel
- Large lifting eyebolts are supplied
- Mounting legs are provided for floor mounting

Discount Schedule: C2
Subclass: DK0

Enclosure Catalog Number	Enclosure Size Height x Width x Depth A x B x C in.	mm	Panel Catalog Number	Panel Size Height x Width in.	mm
54428-12FD	54.00 x 42.00 x 8.00	1372 x 1067 x 203	AW5442P	49.87 x 37.87	1267 x 962
60488-12FD	60.00 x 48.00 x 8.00	1524 x 1219 x 203	AW6048P	55.87 x 43.87	1419 x 1114
604810-12FD	60.00 x 48.00 x 10.00	1524 x 1219 x 254	AW6048P	55.87 x 43.87	1419 x 1114
606010-12FD	60.00 x 60.00 x 10.00	1524 x 1524 x 254	AW6060P	55.87 x 55.87	1419 x 1419
726010-12FD	72.00 x 60.00 x 10.00	1829 x 1524 x 254	AW7260P	67.87 x 55.87	1724 x 1419
727210-12FD	72.00 x 72.00 x 10.00	1829 x 1829 x 254	AW7272P	67.87 x 67.87	1724 x 1724
604812-12FD	60.00 x 48.00 x 12.00	1524 x 1219 x 305	AW6048P	55.87 x 43.87	1419 x 1114
606012-12FD	60.00 x 60.00 x 12.00	1524 x 1524 x 305	AW6060P	55.87 x 55.87	1419 x 1419
726012-12FD	72.00 x 60.00 x 12.00	1829 x 1524 x 305	AW7260P	67.87 x 55.87	1724 x 1419
727212-12FD	72.00 x 72.00 x 12.00	1829 x 1829 x 305	AW7272P	67.87 x 67.87	1724 x 1724
604816-12FD	60.00 x 48.00 x 16.00	1524 x 1219 x 406	AW6048P	55.87 x 43.87	1419 x 1114
606016-12FD	60.00 x 60.00 x 16.00	1524 x 1524 x 406	AW6060P	55.87 x 55.87	1419 x 1419
726016-12FD	72.00 x 60.00 x 16.00	1829 x 1524 x 406	AW7260P	67.87 x 55.87	1724 x 1419
727216-12FD	72.00 x 72.00 x 16.00	1829 x 1829 x 406	AW7272P	67.87 x 67.87	1724 x 1724
604820-12FD	60.00 x 48.00 x 20.00	1524 x 1219 x 508	AW6048P	55.87 x 43.87	1419 x 1114
726020-12FD	72.00 x 60.00 x 20.00	1829 x 1524 x 508	AW7260P	67.87 x 55.87	1724 x 1419
727220-12FD	72.00 x 72.00 x 20.00	1829 x 1829 x 508	AW7272P	67.87 x 67.87	1724 x 1724
604824-12FD	60.00 x 48.00 x 24.00	1524 x 1219 x 610	AW6048P	55.87 x 43.87	1419 x 1114
606024-12FD	60.00 x 60.00 x 24.00	1524 x 1524 x 610	AW6060P	55.87 x 55.87	1419 x 1419
726024-12FD	72.00 x 60.00 x 24.00	1829 x 1524 x 610	AW7260P	67.87 x 55.87	1724 x 1419
727224-12FD	72.00 x 72.00 x 24.00	1829 x 1829 x 610	AW7272P	67.87 x 67.87	1724 x 1724

Notes: Dimensions are in inches. Millimeters shown are for reference only. Data subject to change without notice.

Ground-Mount Enclosures
Type 12 Double-Door Floor-Standing with 3-Point Locking
Illustration Sheet

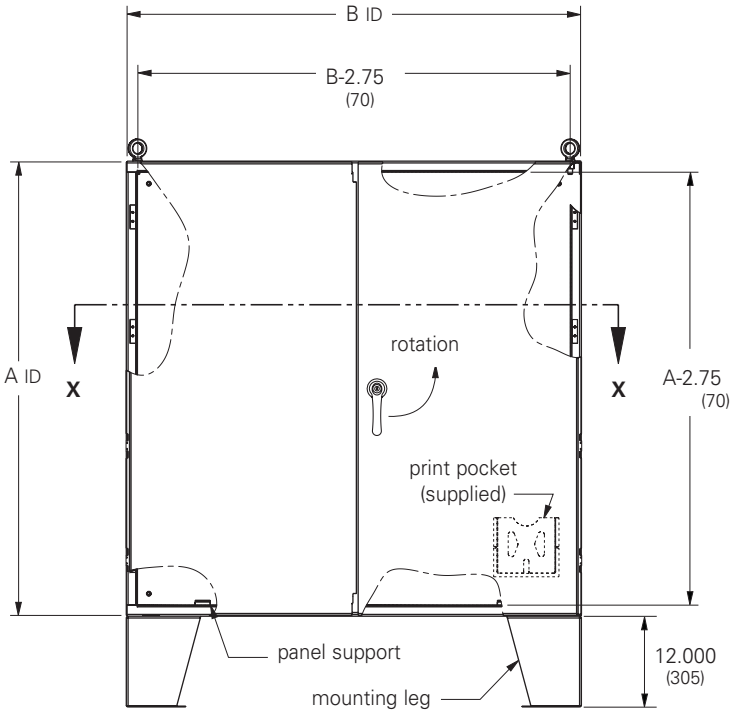

Front View

ID = Inside Dimension

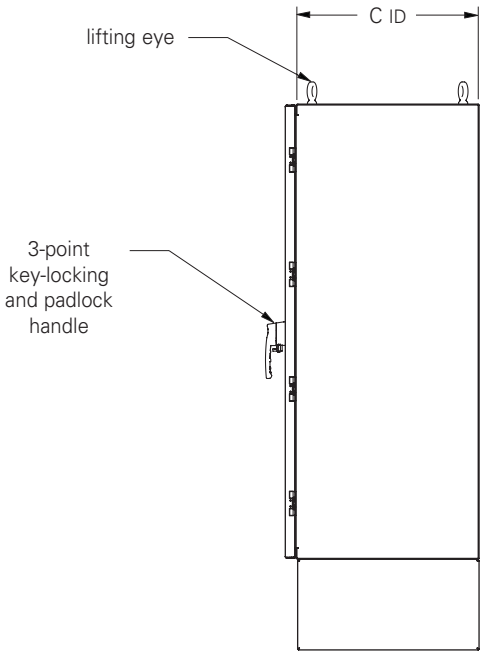

Side View

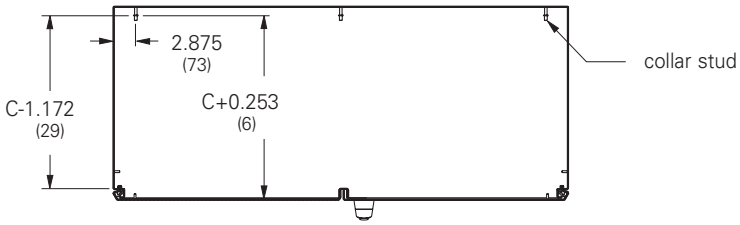

Section X-X

Notes: Four lifting eyes are furnished when C dimensions is 20.00 (508 mm) and larger.
Dimensions are in inches. Millimeters shown are for reference only. Data subject to change without notice.

Ground-Mount Enclosures
Type 12 Double-Door Free-Standing with 3-Point Locking
Data Sheet

Double-Door
Single-Access
See page 115

Double-Door
Dual-Access
See page 116

Application
- Houses electrical controls and instruments
- Easy access panels or rack-mounts for housing optional equipment
- Dual-access construction available for back-to-back panel and equipment mounting
- Protects against circulating dust, falling dirt and dripping non-corrosive liquids

Standards
- UL 508A listed, Type 12
- CSA C22.2 No.94 certified, Type 12
- Conforms to NEMA standard for Type 12
- E.I.A. RS-310-D

Finish
- Wash and phosphate undercoat
- ANSI 61 gray polyester powder finish

Accessories
- Full and half panels
- Side panels
- Swing panels
- Center post
- Rack mount angles and swing out frames (see pages 189 - 190)
- Channel mounting hardware
- Touch-up paint
- Replacement handle, BD-PKHB, (see page 429)
- See Accessories section

Construction
- Enclosure and door are fabricated from code gauge steel (see table)
- All continuous welded seams are finished smooth
- Doors are secured to the body with removable concealed hinges and a center locating 3-point key-locking and padlock handle mechanism which closes the right side door over the left door
- Modern bevel profile on hinge side of enclosure doors
- Doors have an oil-resistant gasket
- Ground stud provided on doors and body
- Print pocket provided
- Large lifting eyebolts are supplied
- Mounting channels are welded inside for locating panels along enclosure depth
- Dual-access enclosures permit back-to-back panel mounting
- Swing panels, single full and single half panels can be installed in double-door enclosures when the center post is used
- A variety of optional panels and accessories are available, (see accessories pages 120-128)
- Two styles of enclosure construction:
  1. Double-door, single-access
  2. Double-door, dual-access

Discount Schedule: C2

Subclass: DM0

Notes: We can provide special sizes, finishes and other modifications. Consult the factory for your special requirements.

Ground-Mount Enclosures
Type 12 Double-Door Single-Access Free-Standing with 3-Point Locking
Illustration Sheet and Catalog Number

Enclosure Catalog Number ANSI 61 Gray Carbon Steel	Enclosure Size Height x Width x Depth A x B x C in.	mm	Body/Door Gauge	D in.	D mm	E in.	E mm
604818-12FSD	60.00 x 48.00 x 18.00	1524 x 1219 x 457	12/12	23.12	587	32.00	813
724818-12FSD	72.00 x 48.00 x 18.00	1829 x 1219 x 457	12/12	29.12	740	38.00	965
726018-12FSD	72.00 x 60.00 x 18.00	1829 x 1524 x 457	12/12	29.12	740	38.00	965
727218-12FSD	72.00 x 72.00 x 18.00	1829 x 1829 x 457	12/12	29.12	740	38.00	965
904820-12FSD	90.00 x 48.00 x 20.00	2286 x 1219 x 508	12/10	38.12	968	47.00	1194
907220-12FSD	90.00 x 72.00 x 20.00	2286 x 1829 x 508	12/10	38.12	968	47.00	1194
724824-12FSD	72.00 x 48.00 x 24.00	1829 x 1219 x 610	12/12	29.12	740	38.00	965
726024-12FSD	72.00 x 60.00 x 24.00	1829 x 1524 x 610	12/12	29.12	740	38.00	965
727224-12FSD	72.00 x 72.00 x 24.00	1829 x 1829 x 610	12/12	29.12	740	38.00	965
907224-12FSD	90.00 x 72.00 x 24.00	2286 x 1829 x 610	12/10	38.12	968	47.00	1194
726036-12FSD	72.00 x 60.00 x 36.00	1829 x 1524 x 914	12/12	29.12	740	38.00	965
907236-12FSD	90.00 x 72.00 x 36.00	2286 x 1829 x 914	12/10	38.12	968	47.00	1194

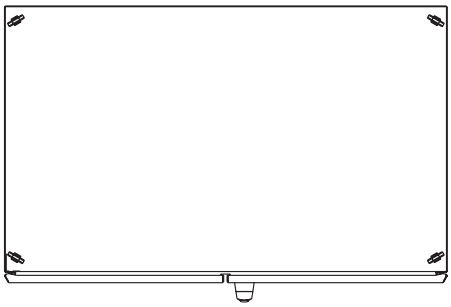

Top View

ID = Inside Dimension

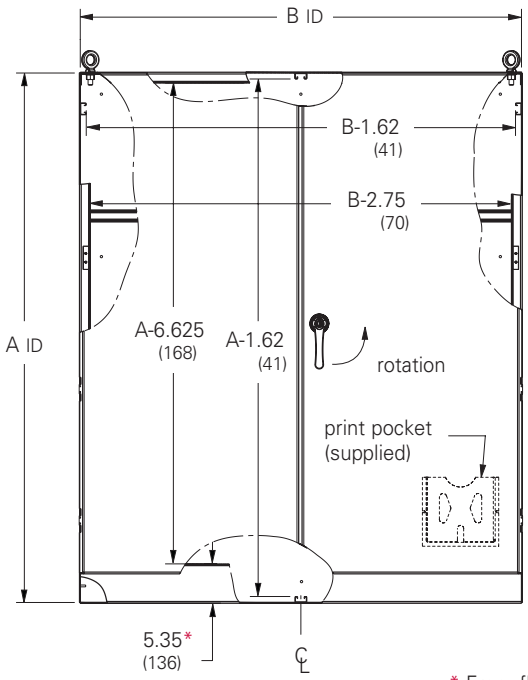

Front View

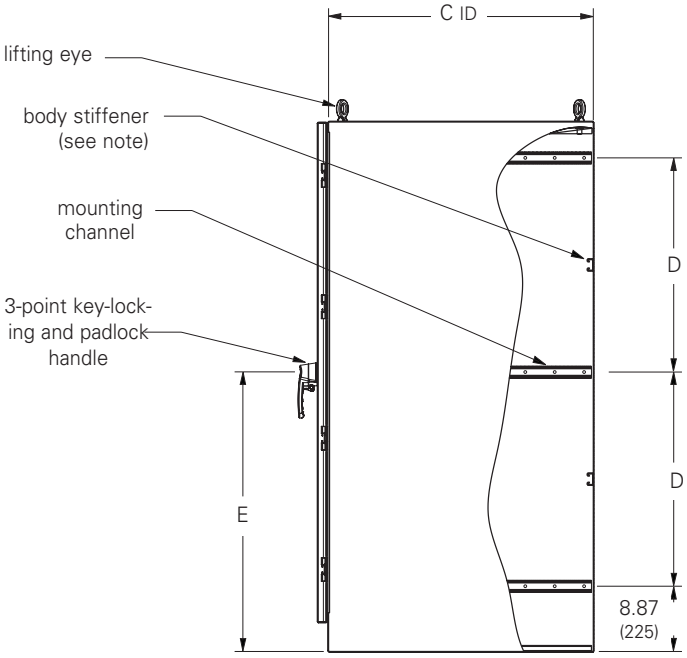

Side View

* From flange opening to bottom of enclosure

Notes: Two body stiffeners spaced evenly along enclosure height. Two lifting eyes are furnished when C dimension is less than 36.00 (914 mm). Dimensions are in inches. Millimeters shown are for reference only. Data subject to change without notice.

Ground-Mount Enclosures
Type 12 Double-Door Dual-Access Free-Standing with 3-Point Locking
Illustration Sheet and Catalog Number

Enclosure Catalog Number ANSI 61 Gray Carbon Steel	Enclosure Size Height x Width x Depth A x B x C in.	mm	Body/Door Gauge	D in.	D mm	E in.	E mm
724824-12FSDDA	72.00 x 48.00 x 24.00	1829 x 1219 x 610	12/12	29.12	740	38.00	965
726024-12FSDDA	72.00 x 60.00 x 24.00	1829 x 1524 x 610	12/12	29.12	740	38.00	965
727224-12FSDDA	72.00 x 72.00 x 24.00	1829 x 1829 x 610	12/12	29.12	740	38.00	965
907224-12FSDDA	90.00 x 72.00 x 24.00	2286 x 1829 x 610	12/10	38.12	968	47.00	1194
726036-12FSDDA	72.00 x 60.00 x 36.00	1829 x 1524 x 914	12/12	29.12	740	38.00	965

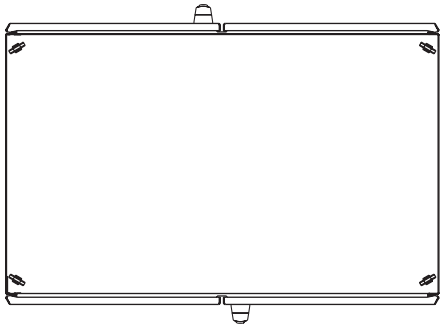

Top View

ID = Inside Dimension

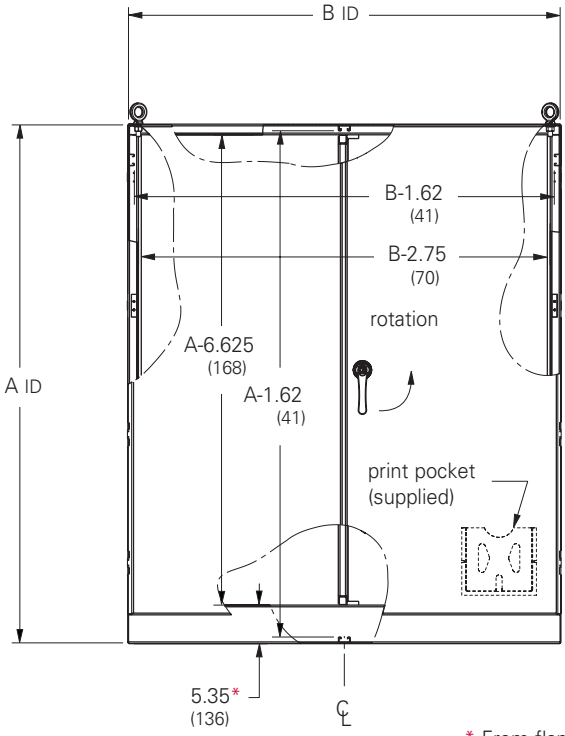

Front View

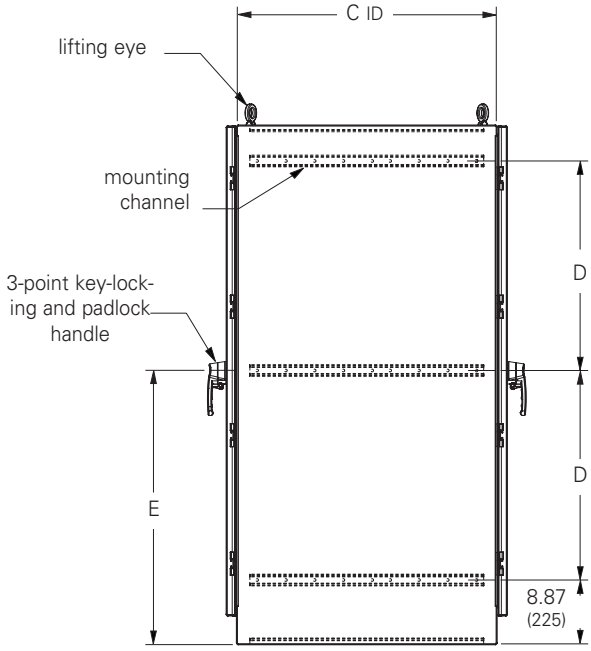

Side View

* From flange opening to bottom of enclosure

Notes: Two lifting eyes are furnished when C dimension is less than 36.00 (914 mm).
Dimensions are in inches. Millimeters shown are for reference only. Data subject to change without notice.

Free-Standing Enclosure Accessories
Type 12 Single-Door
Full and Half Panel
Illustration Sheet and Catalog Number

Discount Schedule: C2
Subclass: DSD

Full Panel (Single-Door)

Panel Catalog Number	Panel Size Height x Width A x B in.	mm	C in.	mm	Fits Enclosure Height x Width in.	mm
AF6024P	47.87 x 19.87	1216 x 505	23.12	587	60.00 x 24.00	1524 x 610
AF6036P	47.87 x 31.87	1216 x 809	23.12	587	60.00 x 36.00	1524 x 914
AF7224P	59.87 x 19.87	1521 x 505	29.12	740	72.00 x 24.00	1829 x 610
AF7230P	59.87 x 25.87	1521 x 657	29.12	740	72.00 x 30.00	1829 x 762
AF7236P	59.87 x 31.87	1521 x 809	29.12	740	72.00 x 36.00	1829 x 914
AF9024P	77.87 x 19.87	1978 x 505	38.12	968	90.00 x 24.00	2286 x 610
AF9036P	77.87 x 31.87	1978 x 809	38.12	968	90.00 x 36.00	2286 x 914

Half Panel (Single-Door)

Panel Catalog Number	Panel Size Height x Width A x B in.	mm	C in.	mm	Fits Enclosure Height x Width in.	mm
AF6024HP	24.75 x 19.87	629 x 505	23.12	587	60.00 x 24.00	1524 x 610
AF6036HP	24.75 x 31.87	629 x 809	23.12	587	60.00 x 36.00	1524 x 914
AF7224HP	30.75 x 19.87	781 x 505	29.12	587	72.00 x 24.00	1829 x 610
AF7230HP	30.75 x 25.87	781 x 657	29.12	587	72.00 x 30.00	1829 x 762
AF7236HP	30.75 x 31.87	781 x 809	29.12	587	72.00 x 36.00	1829 x 914
AF9024HP	39.75 x 19.87	1010 x 505	38.12	968	90.00 x 24.00	2286 x 610
AF9036HP	39.75 x 31.87	1010 x 809	38.12	968	90.00 x 36.00	2286 x 914

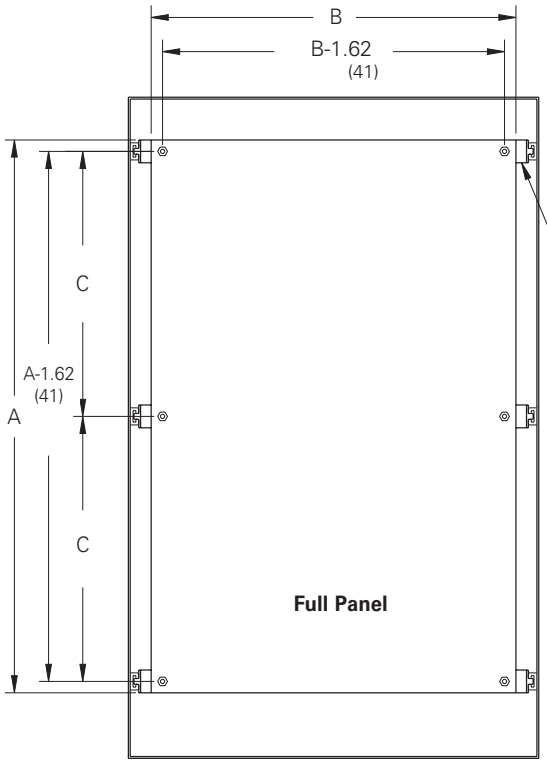

Full Panel Mounting

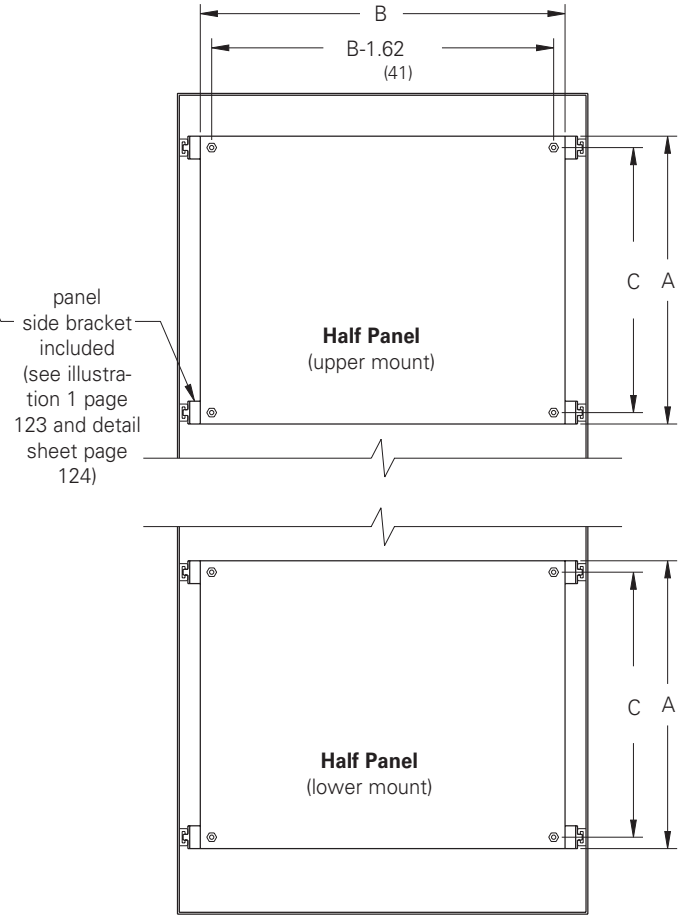

Half Panel Mounting

Note: Full and Half panel for single-door, single and dual-access enclosures are (12) gauge steel and furnished with panel side brackets and all hardware necessary for channel and panel mounting. Half Panels can be mounted in either the upper or lower portion of the enclosure. Free standing design permits the panel to adjust along the depth of the enclosure. With dual-access enclosures, Full and Half panels can be mounted back-to-back.

Notes: Dimensions are in inches. Millimeters shown are for reference only. Data subject to change without notice.

Free-Standing Enclosure Accessories
Type 12 Double-Door
Full Panel
Illustration Sheet and Catalog Number

Discount Schedule: C2
Subclass: DSD

Panel Catalog Number	Panel Size Height x Width A x B in.	Panel Size A x B mm	C in.	C mm	D in.	D mm	Fits Enclosure Height x Width in.	Fits Enclosure Height x Width mm
AF6048P	47.87 x 43.87	1216 x 1114	23.12	587	21.12	530	60.00 x 48.00	1524 x 1219
AF6060P	47.87 x 55.87	1216 x 1419	23.12	587	27.12	689	60.00 x 60.00	1524 x 1524
AF7248P	59.87 x 43.87	1521 x 1114	29.12	740	21.12	530	72.00 x 48.00	1829 x 1219
AF7260P	59.87 x 55.87	1521 x 1419	29.12	740	27.12	689	72.00 x 60.00	1829 x 1524
AF7272P	59.87 x 67.87	1521 x 1724	29.12	740	33.12	841	72.00 x 72.00	1829 x 1829
AF9048P	77.87 x 43.87	1978 x 1114	38.12	968	21.12	530	90.00 x 48.00	2286 x 1219
AF9072P	77.87 x 67.87	1978 x 1724	38.12	968	33.12	841	90.00 x 72.00	2286 x 1829

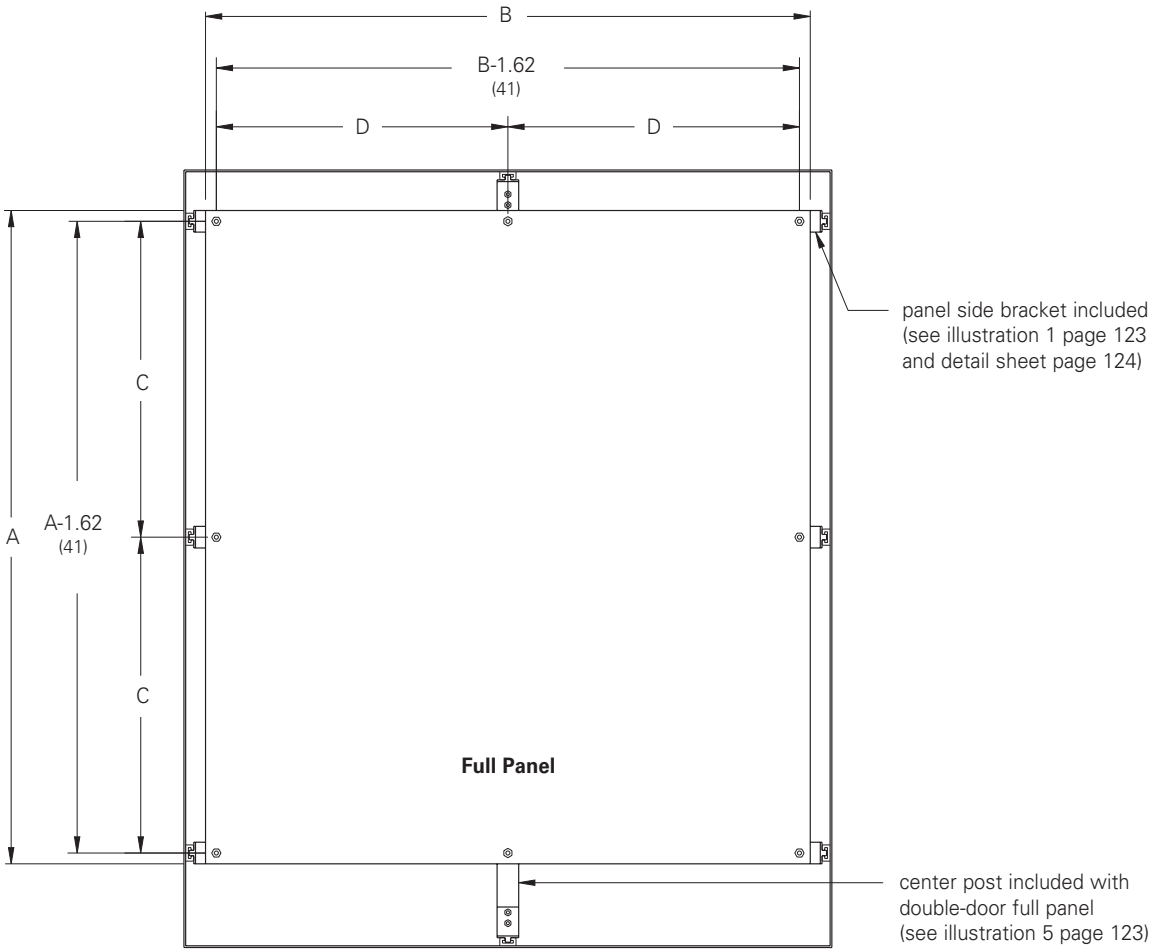

Full Panel Mounting

Notes: Full Panel for double-door, single and dual-access enclosures are (10) gauge steel and furnished with Panel Brackets, Center Post assembly, panel handle kit and all hardware necessary for channel and panel mounting. The Center Post assembly offers additional support of panel and equipment. Free-standing design permits the panel to adjust along the depth of the enclosure. With dual-access enclosures, Full and Half Panels can be mounted back-to-back.

Notes: Dimensions are in inches. Millimeters shown are for reference only. Data subject to change without notice.

Free-Standing Enclosure Accessories
Type 12 Double-Door
Half Panel
Illustration Sheet and Catalog Number

Discount Schedule: C2
Subclass: DSD

Panel Catalog Number	Panel Size Height x Width A x B in.	mm	C in.	mm	D in.	mm	Fits Enclosure Height x Width in.	mm
AF6048HP	24.75x43.87	629x1114	23.12	587	21.12	536	60.00x48.00	1524x1219
AF7248HP	30.75x43.87	781x1114	29.12	740	21.12	536	72.00x48.00	1829x1219
AF7260HP	30.75x55.87	781x1419	29.12	740	7.12	181	72.00x60.00	1829x1524
AF7272HP	30.75x67.87	781x1724	29.12	740	33.12	841	72.00x72.00	1829x1829
AF9048HP	39.75x43.87	1010x1114	38.12	968	21.12	536	90.00x48.00	2286x1219
AF9072HP	39.85x67.87	1012x1724	38.12	968	33.12	841	90.00x72.00	2286x1829

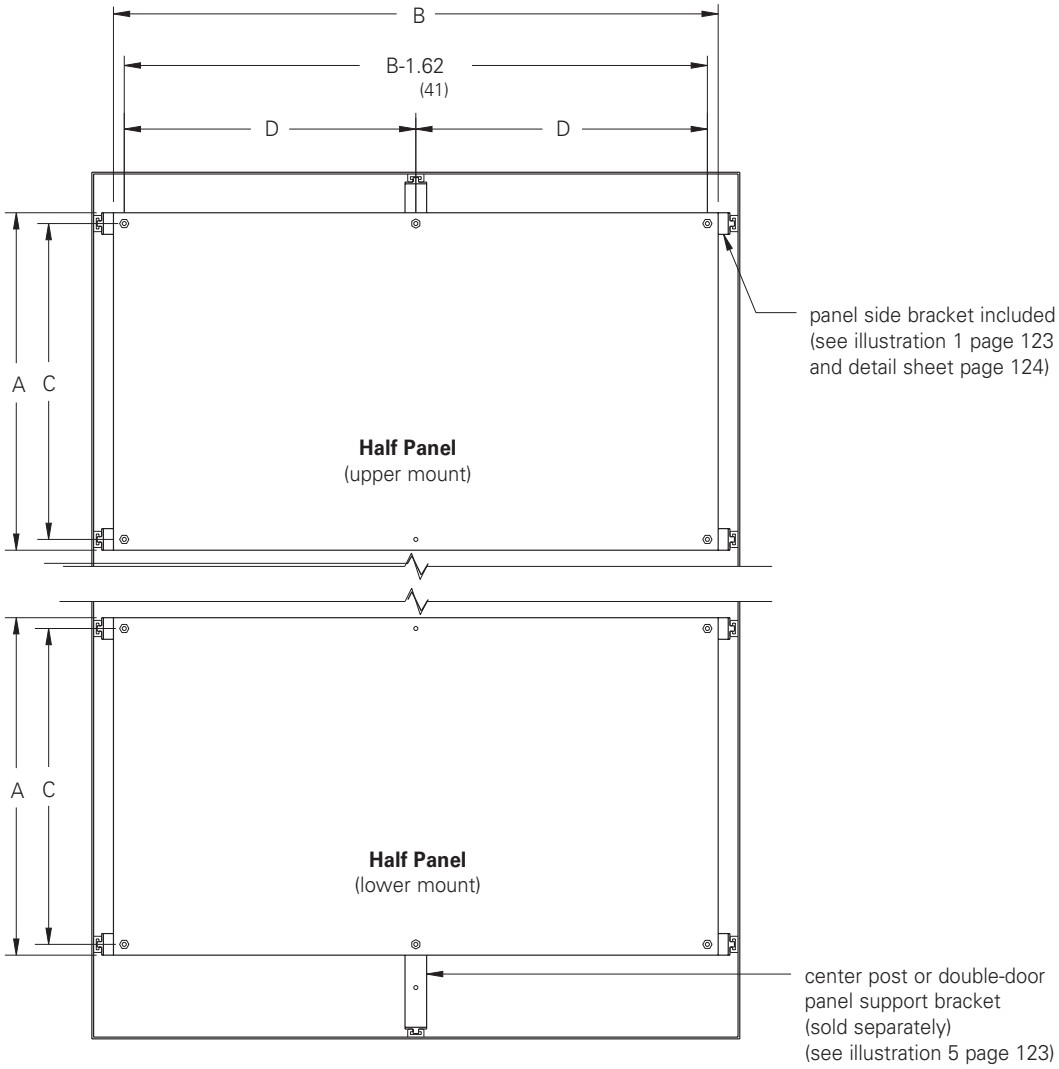

Half Panel Mounting

Note: Half panel for double-door, single and dual-access enclosures are (12) gauge steel and furnished with Panel Brackets and all hardware necessary for channel and panel mounting. **A Center Post assembly or a double-door panel support bracket (catalog number AFSUP2) for additional support of the panel is optional and sold separately.** Free-standing design permits the panel to adjust along the depth of the enclosure. With dual-access enclosures, Full and Half Panels can be mounted back-to-back.

Notes: Dimensions are in inches. Millimeters shown are for reference only. Data subject to change without notice.

Free-Standing Enclosure Accessories Type 12

Side Panel And Center Post

Illustration Sheet and Catalog Number

Discount Schedule: C2

Subclass: DSD

Side Panel

Panel Catalog Number	Panel Size Height x Width A x B in.	mm	C in.	mm	Fits Enclosure Height in.	mm	Depth* in.	mm
AF6018SP	48.37 x 13.87	1229 x 340	23.12	587	60.00	1524	18.00	457
AF7218SP	60.37 x 13.87	1533 x 340	29.12	740	72.00	1829	18.00	457
AF7224SP	60.37 x 19.87	1533 x 505	29.12	740	72.00	1829	24.00	610
AF9018SP	78.37 x 13.87	1991 x 340	38.12	968	90.00	2286	18.00	457
AF9024SP	78.37 x 19.87	1991 x 505	38.12	968	90.00	2286	24.00	457

* Back panels restrict the movement of side panels and will prohibit mounting in some depths. See detail sheet for back panel spacing.

Center Post

Center Post Catalog Number	A in.	mm	B in.	mm	Fits Enclosure Height in.	mm
AF60CPS	58.37	1483	23.12	587	60.00	1524
AF72CPS	70.37	1787	29.12	740	72.00	1829
AF90CPS	88.37	2245	38.12	968	90.00	2286

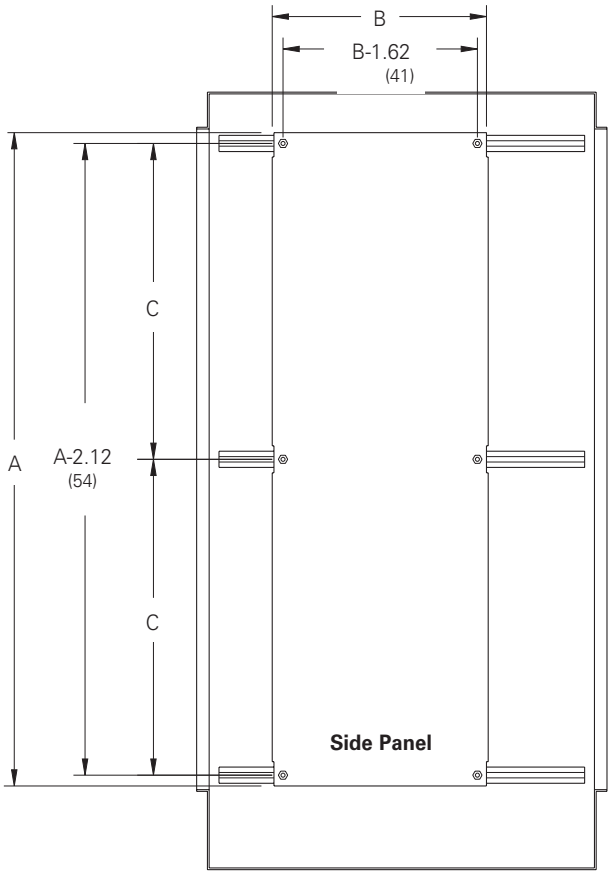

Side Panel Mounting

Side Panels are (12) gauge steel and furnished with hardware necessary for channel mounting. They will fit any width enclosure and are adjustable along its depth, however, when Full or Half Panels are installed, movement will be restricted and with some depths make side mounting prohibitive.

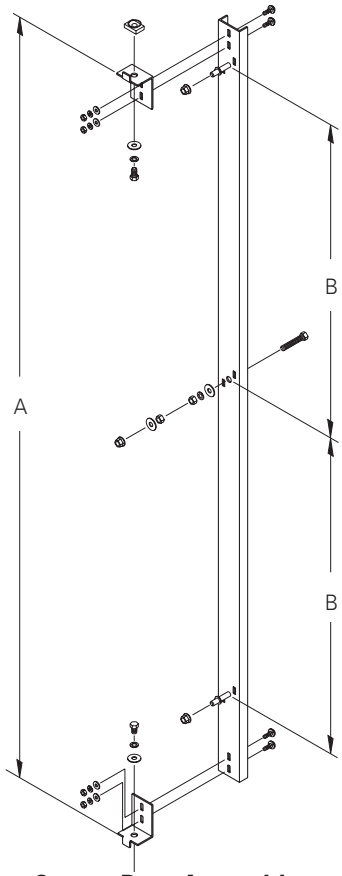

Center Post Assembly

Center Post assembly is furnished with all double-door Full Panels and includes hardware necessary for channel and panel mounting. The Center Post is optional on double-door Half Panels and Swing Panel mounting and must be ordered separately. It attaches to the top and bottom channels making it adjustable along the depth of the enclosure. See illustration #5 on the Detail Sheet-page 123.

Notes: Dimensions are in inches. Millimeters shown are for reference only. Data subject to change without notice.

Free-Standing Enclosure Accessories
Type 12 Single-Door
Full and Half Swing Panel
Illustration Sheet and Catalog Number

Discount Schedule: C2
Subclass: DSD

Full Swing Panel (Single-Door)

Panel Catalog Number	Panel Size Height x Width A x B in.	mm	C in.	mm	Fits Enclosure Height x Width in.	mm
AF6024SWP	47.87 x 18.75	1216 x 476	23.12	587	60.00 x 24.00	1524 x 610
AF6036SWP	47.87 x 30.75	1216 x 781	23.12	587	60.00 x 36.00	1524 x 914
AF7224SWP	59.87 x 18.75	1521 x 476	29.12	740	72.00 x 24.00	1829 x 610
AF7230SWP	59.87 x 24.75	1521 x 629	29.12	740	72.00 x 30.00	1829 x 762
AF7236SWP	59.87 x 30.75	1521 x 781	29.12	740	72.00 x 36.00	1829 x 914
AF9024SWP	77.87 x 18.75	1978 x 476	38.12	968	90.00 x 24.00	2286 x 610
AF9036SWP	77.87 x 30.75	1978 x 781	38.12	968	90.00 x 36.00	2286 x 914

Half Swing Panel (Single-Door)

Panel Catalog Number	Panel Size Height x Width A x B in.	mm	C in.	mm	Fits Enclosure Height x Width in.	mm
AF6024HSWP	24.75 x 18.75	629 x 476	23.12	587	60.00 x 24.00	1524 x 610
AF6036HSWP	24.75 x 30.75	629 x 781	23.12	587	60.00 x 36.00	1524 x 914
AF7224HSWP	30.75 x 18.75	781 x 476	29.12	740	72.00 x 24.00	1829 x 610
AF7230HSWP	30.75 x 24.75	781 x 629	29.12	740	72.00 x 30.00	1829 x 762
AF7236HSWP	30.75 x 30.75	781 x 781	29.12	740	72.00 x 36.00	1829 x 914
AF9024HSWP	39.75 x 18.75	1010 x 476	38.12	968	90.00 x 24.00	2286 x 610
AF9036HSWP	39.75 x 30.75	1010 x 781	38.12	968	90.00 x 36.00	2286 x 914

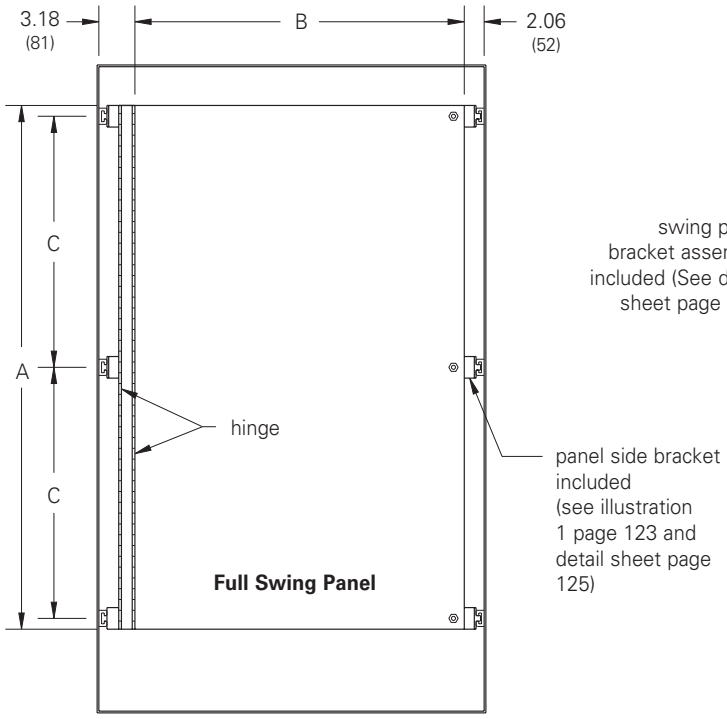

Full Swing Panel Mounting

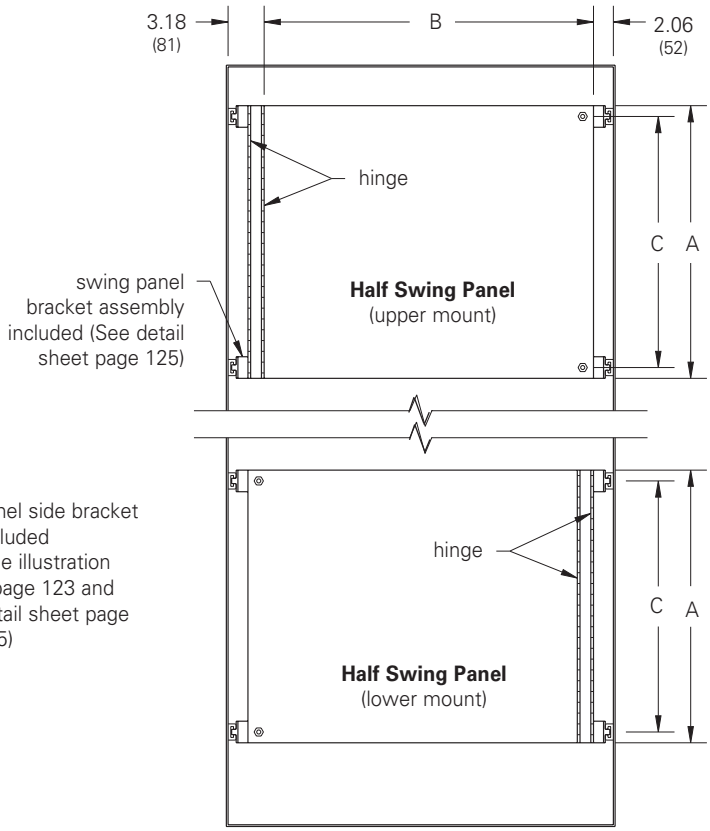

Half Swing Panel Mounting

Note: Full Swing Panel and Half Swing Panel for single-door, single and dual-access enclosures are (12) gauge steel, have a dual hinge swing panel bracket and furnished with Panel Brackets and all hardware necessary for channel and panel mounting. Panels can be installed so they hinge on either the left or right side. In addition, Half Panels can be mounted in either the upper or lower portion of the enclosure. Free-standing design permits the panel to be adjustable along the depth of the enclosure. The dual hinge will allow the inner panel to swing completely out of the door opening when within 5.50 inches of the front. With dual-access enclosures, Full and Half Swing Panels can be mounted back-to-back.

Notes: Dimensions are in inches. Millimeters shown are for reference only. Data subject to change without notice.

Free-Standing Enclosure Accessories
Type 12 Double-Door
Full and Half Swing Panel
Illustration Sheet and Catalog Number

Discount Schedule: C2
Subclass: DSD

Full Swing Panel (Single-Door)

Panel Catalog Number	Panel Size Height x Width A x B in.	mm	C in.	mm	Fits Enclosure Height x Width in.	mm
AF6024SWP	47.87 x 18.75	1216 x 476	23.12	587	60.00 x 48.00	1524 x 1219
AF7224SWP	59.87 x 18.75	1521 x 476	29.12	740	72.00 x 48.00	1829 x 1219
AF7230SWP	59.87 x 24.75	1521 x 629	29.12	740	72.00 x 60.00	1829 x 1524
AF7236SWP	59.87 x 30.75	1521 x 781	29.12	740	72.00 x 72.00	1829 x 1829
AF9024SWP	77.87 x 18.75	1978 x 781	38.12	968	90.00 x 48.00	2286 x 1219
AF9036SWP	77.87 x 30.75	1978 x 781	38.12	968	90.00 x 72.00	2286 x 1829

Half Swing Panel (Single-Door)

Panel Catalog Number	Panel Size Height x Width A x B in.	mm	C in.	mm	Fits Enclosure Height x Width in.	mm
AF6024HSWP	24.75 x 18.75	629 x 476	23.12	587	60.00 x 48.00	1524 x 1219
AF7224HSWP	30.75 x 18.75	781 x 476	29.12	740	72.00 x 48.00	1829 x 1219
AF7230HSWP	30.75 x 24.75	781 x 629	29.12	740	72.00 x 60.00	1829 x 1524
AF7236HSWP	30.75 x 30.75	781 x 781	29.12	740	72.00 x 72.00	1829 x 1829
AF9024HSWP	39.75 x 18.75	1010 x 476	38.12	968	90.00 x 48.00	2286 x 1219
AF9036HSWP	39.75 x 30.75	1010 x 781	38.12	968	90.00 x 72.00	2286 x 1829

A Center Post assembly and Center Bracket must be ordered separately.

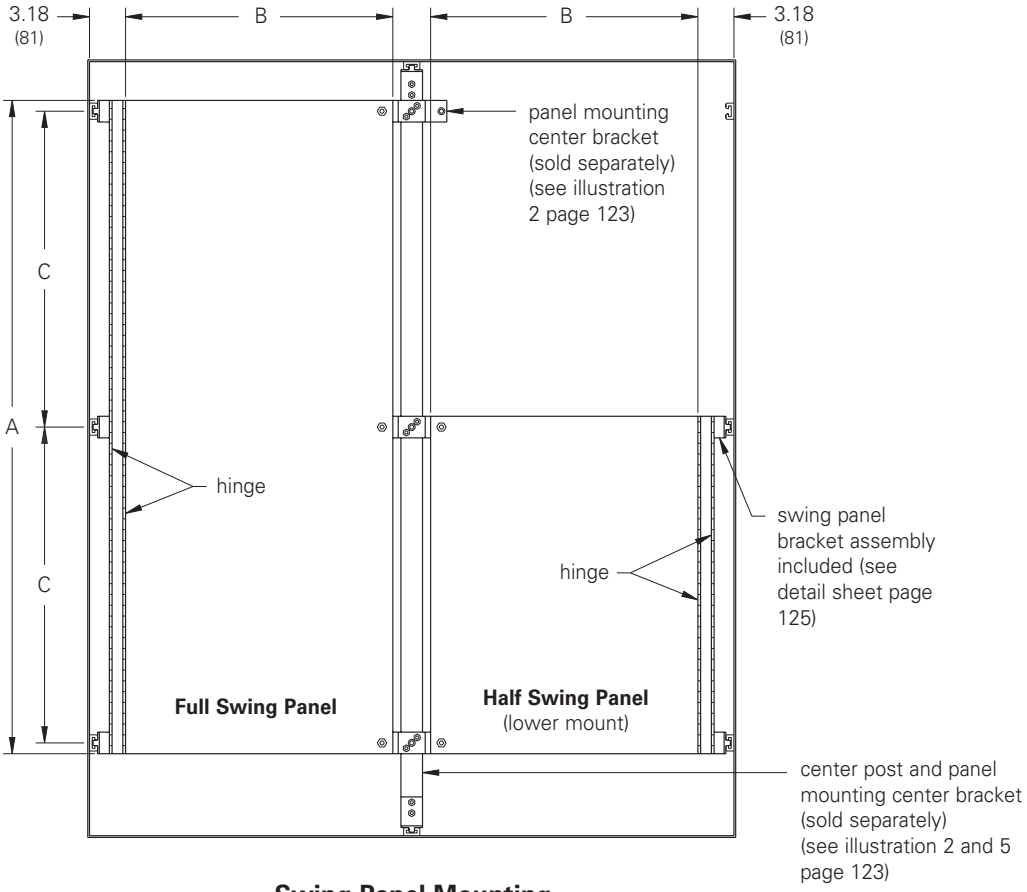

Swing Panel Mounting

Note: Full Swing Panel and Half Swing Panel for double-door, single and dual-access enclosures are (12) gauge steel, have a dual hinge swing panel bracket, and furnished with hardware necessary for side channel mounting. **A Center Post assembly and Center Bracket must be ordered separately.** Panels can be installed so they hinge either on the left or right side. In addition, Half Panels can be mounted in either the upper or lower portion of the enclosure. Free-standing design permits the panel to adjust along the depth of the enclosure. The dual hinge will allow the inner panel to swing completely out of the door opening when within 5.50 inches of the front. With dual-access enclosures, Full and Half Swing Panels can be mounted back-to-back.

Notes: Dimensions are in inches. Millimeters shown are for reference only. Data subject to change without notice.

Free-Standing Enclosure Accessories
Type 12
Miscellaneous Accessories
Illustration Sheet and Catalog Number

Discount Schedule: C2
Subclass: DS0

Miscellaneous Accessories

Catalog Number	Description	Illustration	Quantity
AFSBRKT1	Panel mounting side bracket	1	1
AFCBRKT3	Panel mounting center bracket	2	3
AFCMH3	Channel mounting hardware	3	3
AFPSUP2	Double-door panel support bracket	4	2

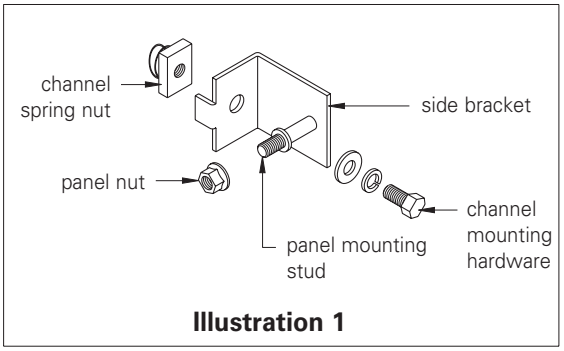

Illustration 1

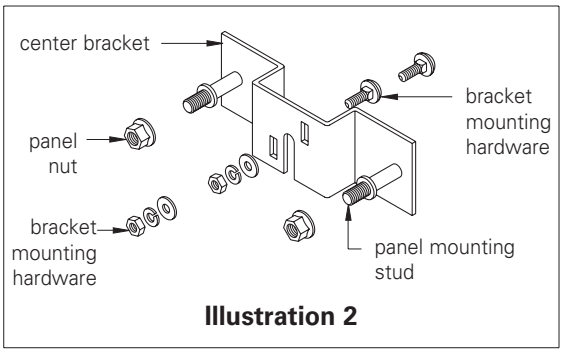

Illustration 2

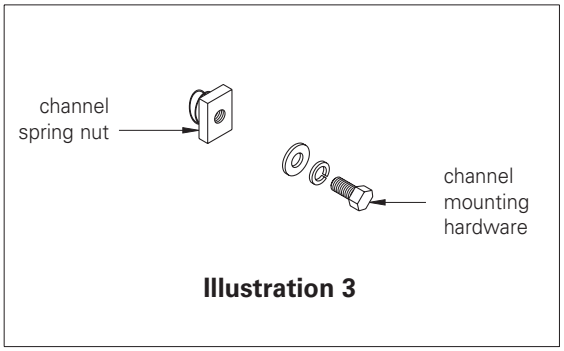

Illustration 3

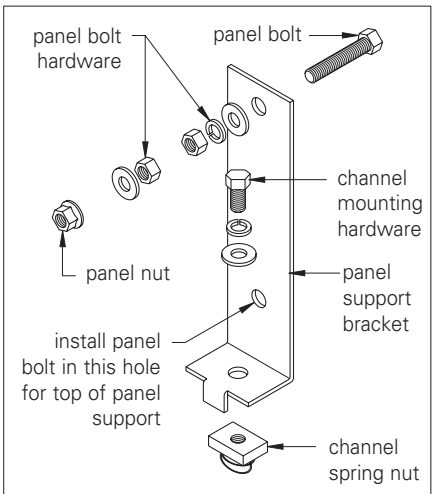

Illustration 4

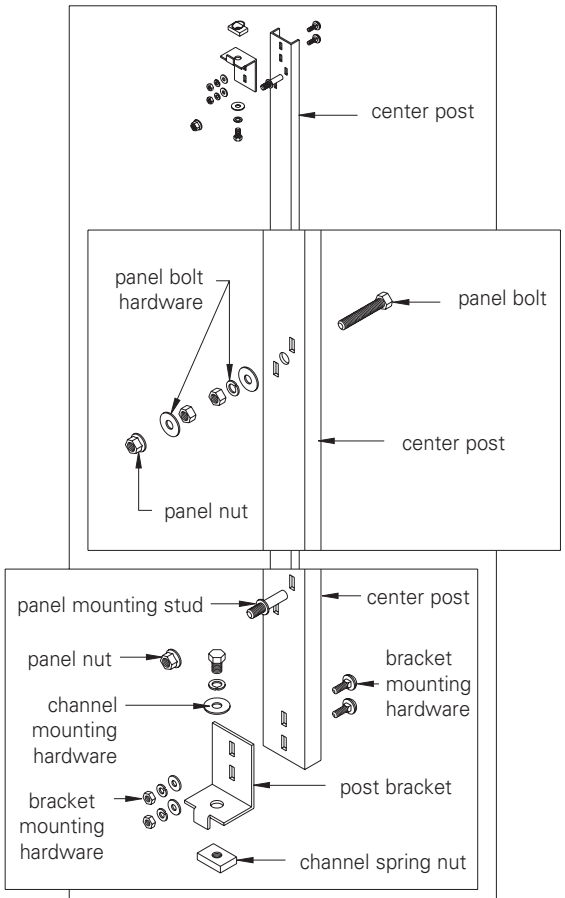

Illustration 5
See catalog number page 120

Notes: Dimensions are in inches. Millimeters shown are for reference only. Data subject to change without notice.

Free-Standing Enclosure Details
Type 12
Panel and Enclosure
Detail Sheet

Discount Schedule: C2
Subclass: DS0

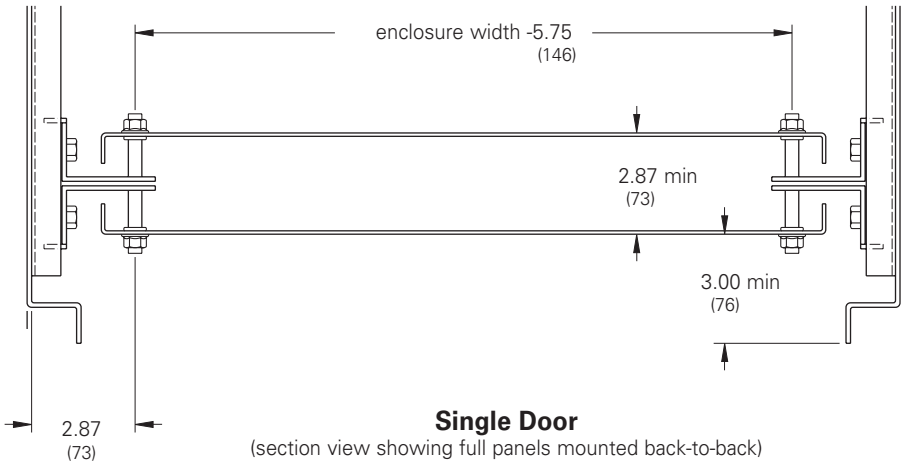

Single Door
(section view showing full panels mounted back-to-back)

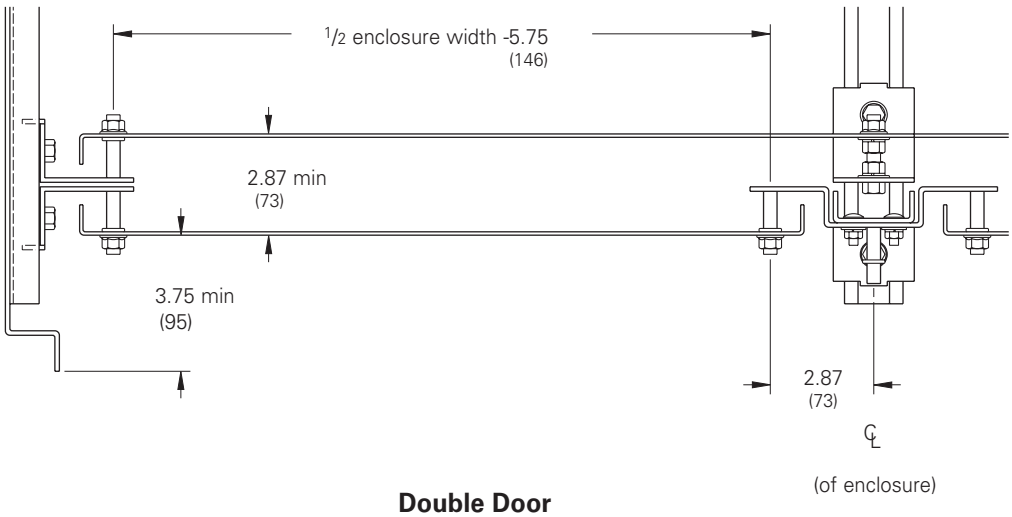

Double Door
(section view showing full panels mounted back-to-back)

Notes: Dimensions are in inches. Millimeters shown are for reference only. Data subject to change without notice.

Free-Standing Enclosure Details
Type 12
Swing Panel and Enclosure
Detail Sheet

Discount Schedule: C2
Subclass: DSD

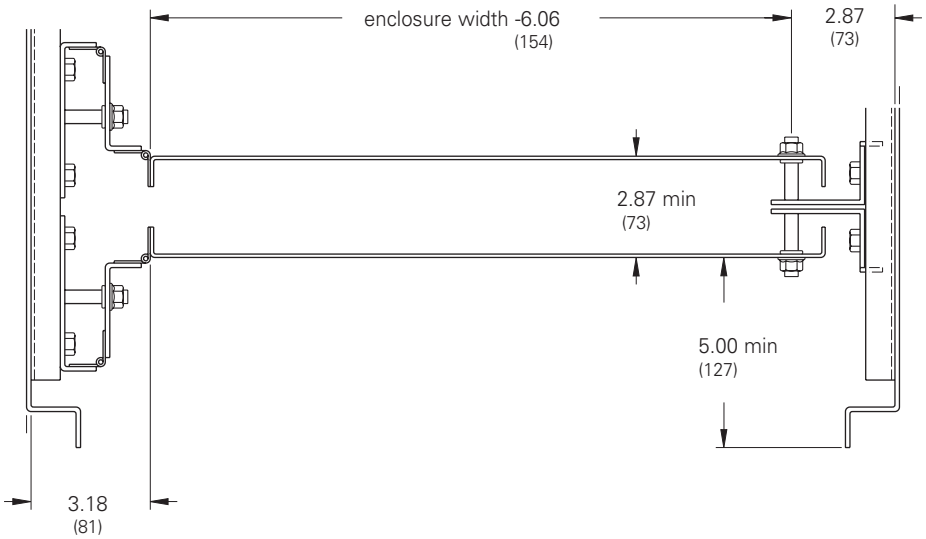

Single Door
(section view showing swing panels mounted back-to-back)

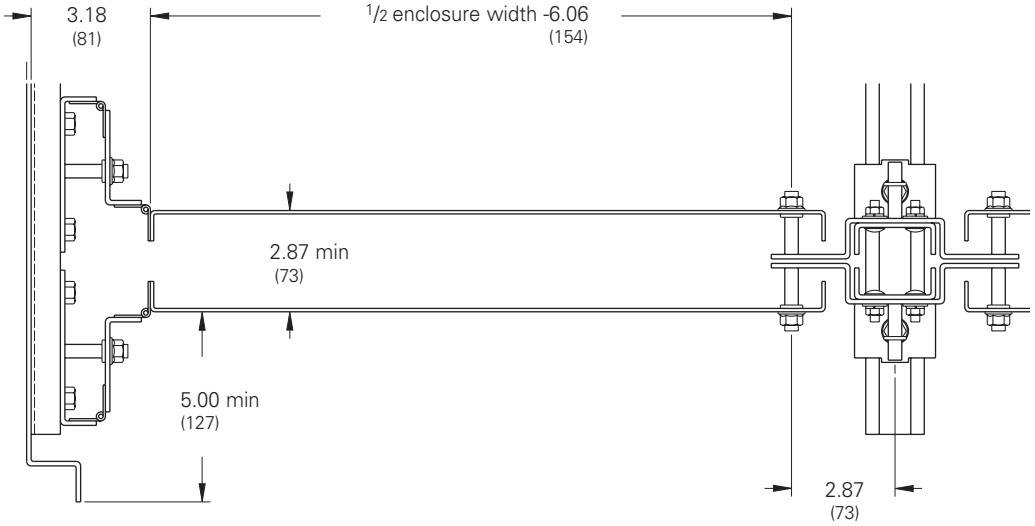

Double Door
(section view showing swing panels mounted back-to-back)

℄
(of enclosure)

Notes: Dimensions are in inches. Millimeters shown are for reference only. Data subject to change without notice.

Ground-Mount Enclosures
Type 12 Modular Free-Standing with 3-Point Locking
Data Sheet

Application
- Houses electrical controls and instruments
- Protects against circulating dust, falling dirt and dripping non-corrosive liquids

Standards
- UL 508A listed, Type 12
- CSA C22.2 No.94 certified, Type 12
- Conforms to NEMA standard for Type 12

Finish
- Wash and phosphate undercoat
- ANSI 61 gray polyester powder finish
- Panels have a white polyester powder finish

Accessories
- Channel mounting hardware
- Blank adapter plates
- Operator adapters
- Touch-up paint
- Replacement handle, BD-PKHB (see page 429)
- See Accessories section

Construction
- Enclosure and door are fabricated from code gauge steel (see table)
- All continuous welded seams are finished smooth
- Doors are secured to the body with removable concealed hinges and a center locating 3-point key-locking and padlock handle mechanism
- Modern bevel profile on hinge side of enclosure door
- Slave doors cannot open without activation of mechanical interlock but can close in any order
- Double-door units have a removable center post
- Doors have an oil-resistant gasket
- Ground stud provided on doors and body
- Print pocket provided
- Modular design and flanged side opening provide strength and a variety of mounting arrangements
- Heavy steel stiffeners welded across the back provide enclosure rigidity
- Removable panels mounted on .375-16 collar studs and panel supports are furnished
- Large lifting eyebolts are supplied

Discount Schedule: C2
Subclass: DN0

Important Note

When ordering modular enclosure systems, be sure to include all the necessary components.

1. Gasket kits and/or end plates (see page 129)

Notes: We can provide special sizes, finishes and other modifications. Consult the factory for your special requirements.

Ground-Mount Enclosures
Type 12 Modular Single-Door Free-Standing with 3-Point Locking
Illustration Sheet and Catalog Number

Enclosure Catalog Number	Enclosure Size Height x Width x Depth A x B x C in.	mm	Body/Door Gauge	Panel Size Height x Width in.	mm
M723818-12FS	72.00 x 38.75 x 18.00	1829 x 984 x 457	12/12	60.00 x 33.75	1524 x 857
M843818-12FS	84.00 x 38.75 x 18.00	2134 x 984 x 457	12/10	72.00 x 33.75	1829 x 857
M843824-12FS	84.00 x 38.75 x 24.00	2134 x 984 x 610	12/10	72.00 x 33.75	1829 x 857

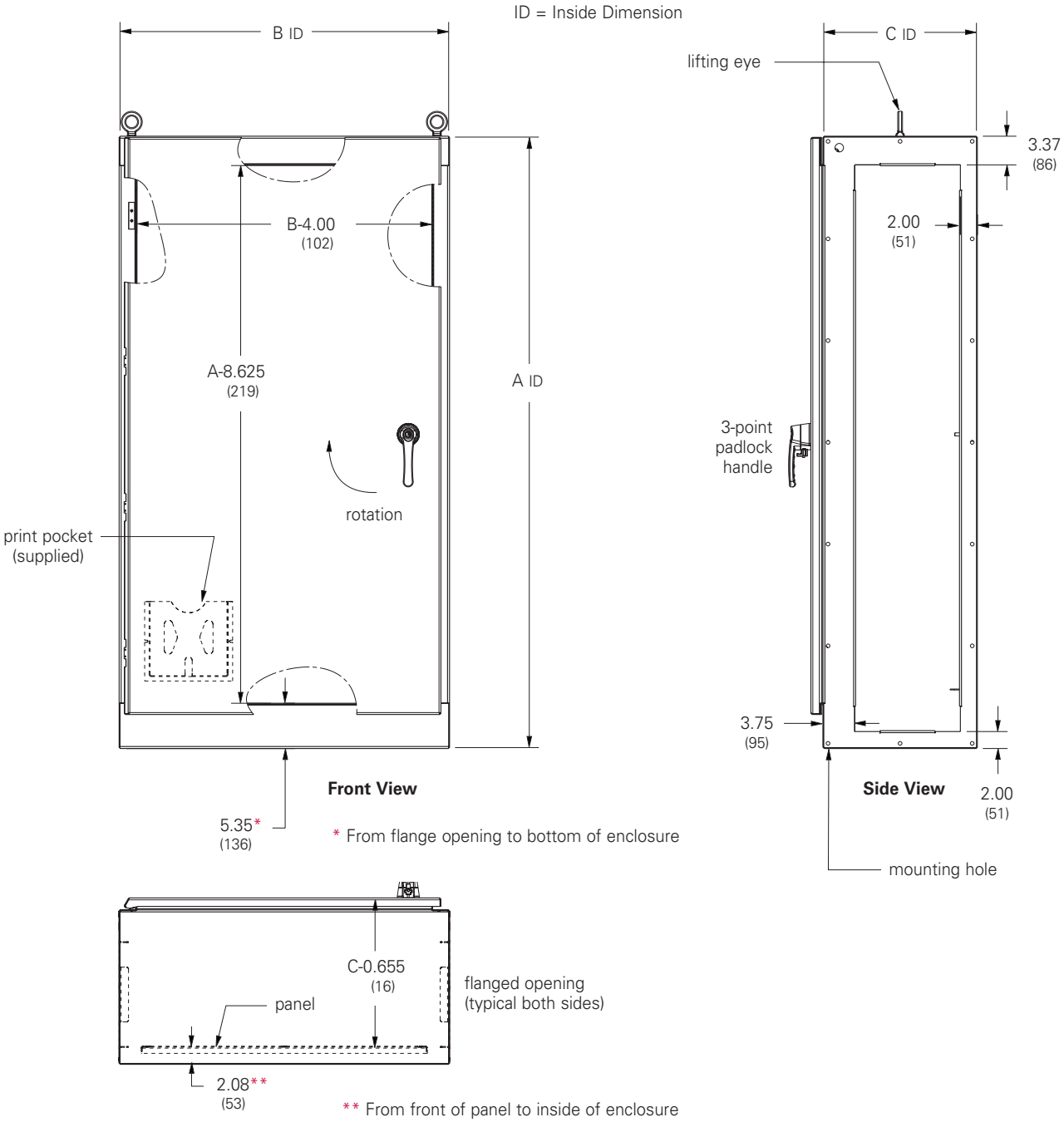

Notes: Four lifting eyes are furnished when C dimension is 24 (610 mm). Dimensions are in inches. Millimeters shown are for reference only. Data subject to change without notice.

Ground-Mount Enclosures
Type 12 Double-Door Modular Free-Standing with 3-Point Locking
Illustration Sheet and Catalog Number

Enclosure Catalog Number	Enclosure Size Height x Width x Depth A x B x C in.	mm	Body/Door Gauge	Panel Size Height x Width in.	mm
M727718-12FS	72.00 x 77.00 x 18.00	1829 x 1956 x 457	12/12	60.00 x 72.00	1524 x 1829
M847718-12FS	84.00 x 77.00 x 18.00	2134 x 1956 x 457	12/10	72.00 x 72.00	1829 x 1829
M847724-12FS	84.00 x 77.00 x 24.00	2134 x 1956 x 457	12/10	72.00 x 72.00	1829 x 1829

ID = Inside Dimension

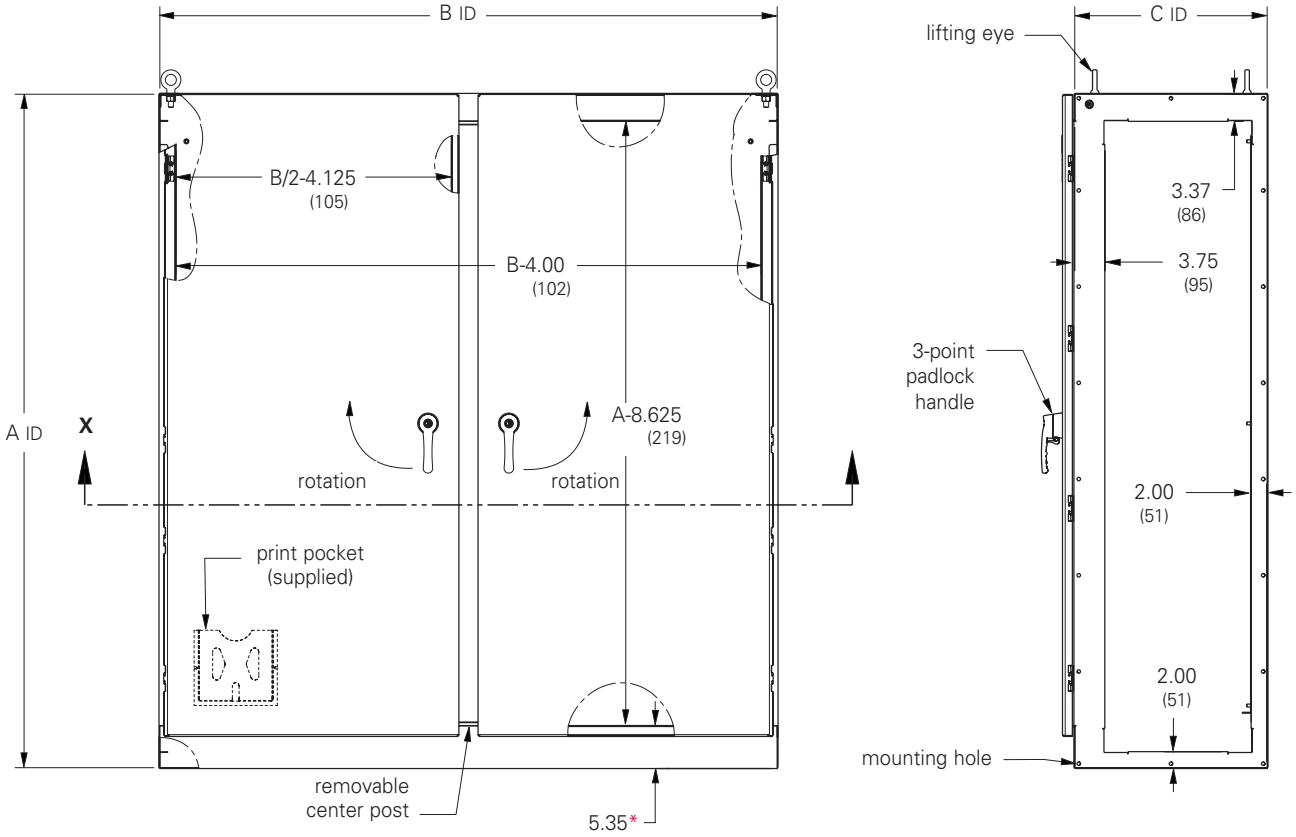

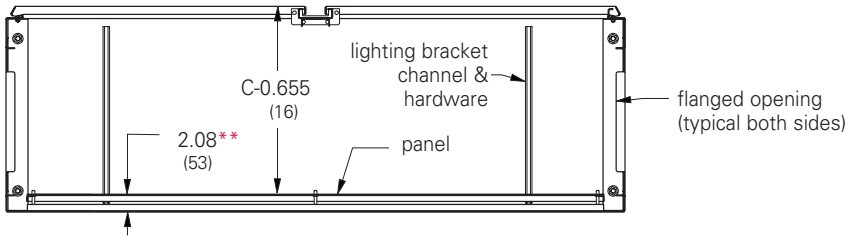

Section X-X

** From front of panel to inside of enclosure

Notes: Two lifting eyes are furnished when C dimension is 18 (457 mm). Dimensions are in inches. Millimeters shown are for reference only. Data subject to change without notice.

Modular Free-Standing Enclosure Accessories
Type 12
Illustration Sheet and Catalog Number

Modular Accessories

Catalog Number	Size A in.	Size A mm	Size B in.	Size B mm	Fits Enclosure H x D in.	Fits Enclosure H x D mm	Fits Enclosure H x D in.	Fits Enclosure H x D mm
End Plate								
M7218-12FEK	72.00	1829	18.00	457	72.00	1829	18.00	457
M8418-12FEK	84.00	2134	18.00	457	84.00	2134	18.00	457
M8424-12FEK	84.00	2134	24.00	610	84.00	2134	24.00	610
Flat End Plate/Barrier								
M7218-12FBK	72.00	1829	18.25	464	72.00	1829	18.00	457
M8418-12FBK	84.00	2134	18.25	464	84.00	2134	18.00	457
M8424-12FBK	84.00	2134	24.25	464	84.00	2134	24.00	610
Gasket Kit								
M7218-12FGK	72.00	1829	18.00	457	72.00	1829	18.00	457
M8418-12FGK	84.00	2134	18.00	457	84.00	2134	18.00	457
M8424-12FGK	84.00	2134	24.00	610	84.00	2134	24.00	610

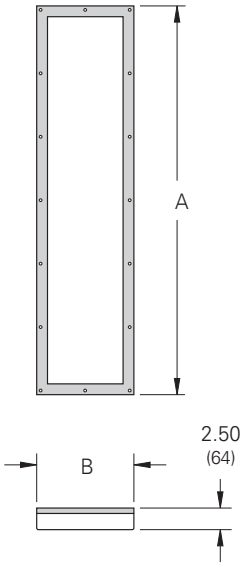

End Plate
Formed end plate and gasket used to seal open end of Modular enclosure. Includes: End Plate, Gasket & Hardware.

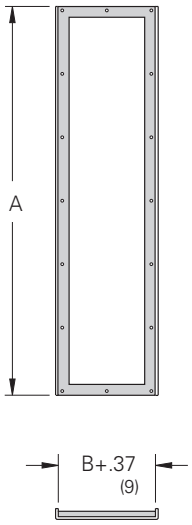

Flat End Plate
Flat end plate and gasket used to seal open end of Modular enclosure. Also can serve as a barrier when additional gasket is used. Includes: Flat End Plate, Gasket & Hardware

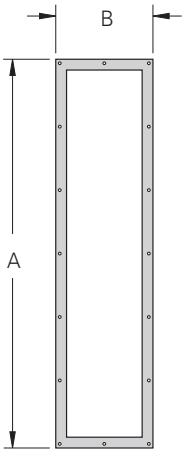

Gasket Kit
Pre-cut and pre-punched high density poron gasket is required for sealing barrier to additional modular enclosures when ganging. Includes: Gasket & Hardware.

Notes: Dimensions are in inches. Millimeters shown are for reference only. Data subject to change without notice.

Ground-Mount Enclosures
Type 12 Multi-Door Free-Standing with 3-Point Locking
Data Sheet

Application
- Houses electrical controls and instruments
- Protects against circulating dust, falling dirt and dripping non-corrosive liquids

Standards
- UL 508A listed, Type 12
- CSA C22.2 No.94 certified, Type 12
- Conforms to NEMA standard for Type 12

Accessories
- Channel mounting hardware
- Touch-up paint
- Replacement handle, BD-PKHB, (see page 429)
- See Accessories section

Finish
- Wash and phosphate undercoat
- ANSI 61 gray polyester powder finish

Construction
- Enclosure and door are fabricated from code gauge steel (see table)
- All continuous welded seams are finished smooth
- Doors are secured to the body with removable concealed hinges and a center locating 3-point key-locking and padlock handle mechanism
- Modern bevel profile on hinge side of enclosure doors
- Double-door sections close right over left with no center post for complete access
- Right side door provides a mechanical interlock and serves as a master door
- Slave doors cannot open without activating mechanical interlock but can close in any order
- Doors have an oil-resistant gasket
- Ground stud provided on doors and body
- Print pockets provided
- Heavy steel stiffeners welded across the back provide enclosure rigidity
- Lighting mounting channel provided
- Removable panels mounted on .375-16 collar studs and panel supports are furnished behind each door
- Large lifting eyebolts are supplied
- Three styles of enclosure construction:
  1. Three-door: single and double-door section
  2. Four-door: (2) double door sections
  3. Five-door: single and (2) double-door sections
- Panels have a white enamel finish

Discount Schedule: C2

Subclass: DMM

Notes: We can provide special sizes, finishes and other modifications. Consult the factory for your special requirements.

Ground-Mount Enclosures
Type 12 Three-Door Free-Standing with 3-Point Locking
Illustration Sheet and Catalog Number

Enclosure Catalog Number	Enclosure Size Height x Width x Depth in.	mm	Body/Door Gauge	Panel A Size Height x Width in.	mm	Panel B Size Height x Width in.	mm
8611214-12FS	86.00 x 112.00 x 14.00	2184 x 2845 x 356	10/12	78.00 x 33.00	1981 x 838	78.00 x 70.00	1981 x 1778

Top View

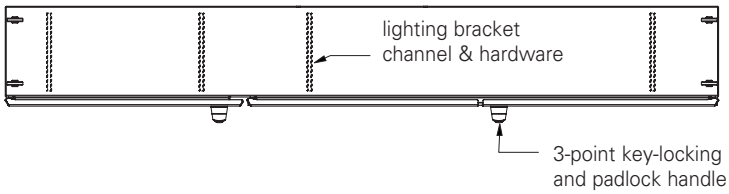

ID = Inside Dimension

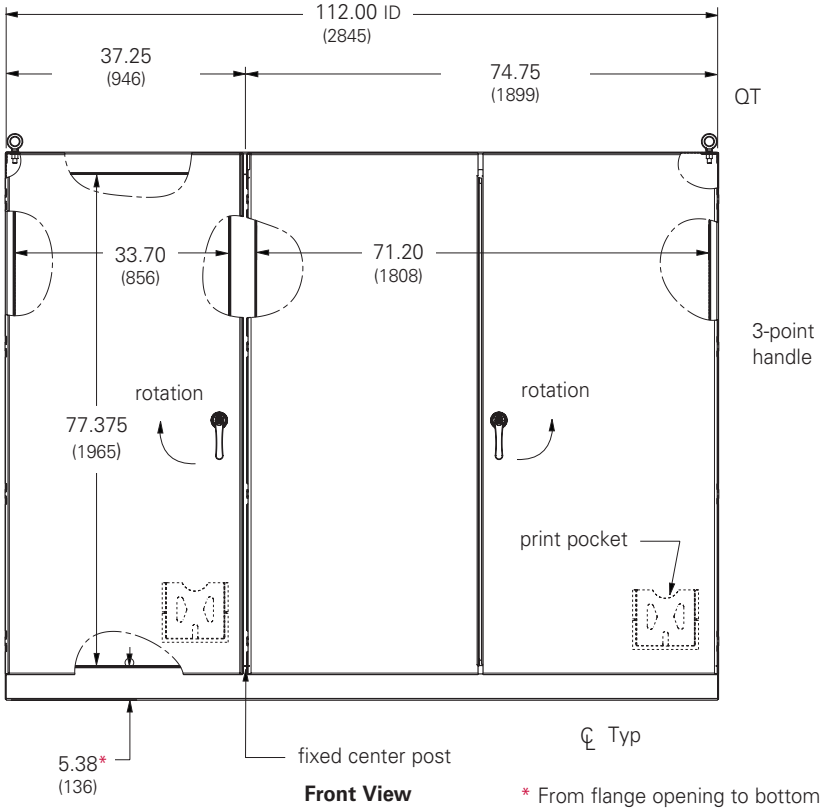

Front View

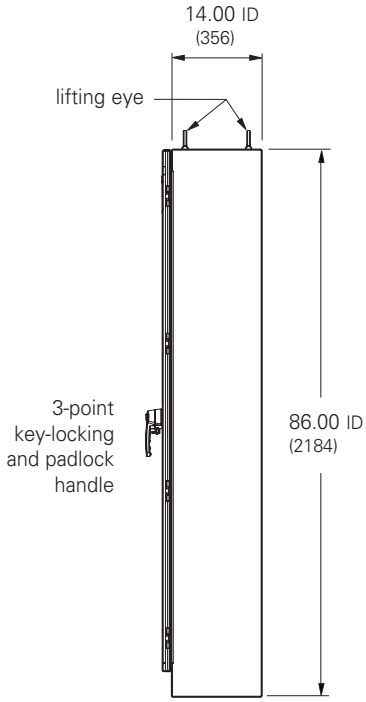

Side View

* From flange opening to bottom of enclosure

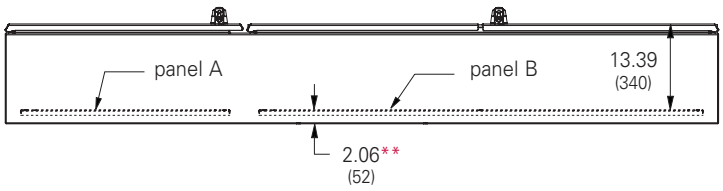

Bottom View

** From front of panel to inside of enclosure

Notes: Dimensions are in inches. Millimeters shown are for reference only. Data subject to change without notice.

Ground-Mount Enclosures
Type 12 Four-Door Free-Standing with 3-Point Locking
Illustration Sheet and Catalog Number

Enclosure Catalog Number	Enclosure Size Height x Width x Depth in.	Enclosure Size Height x Width x Depth mm	Body/Door Gauge	Panel Size Height x Width in.	Panel Size Height x Width mm
8615014-12FS	86.00 x 150.00 x 14.00	2184 x 3810 x 356	10/12	78.00 x 70.00	1981 x 1778

Top View

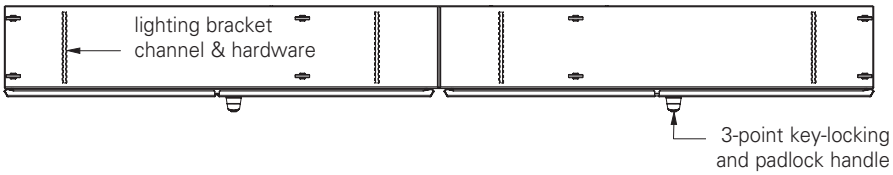

ID = Inside Dimension

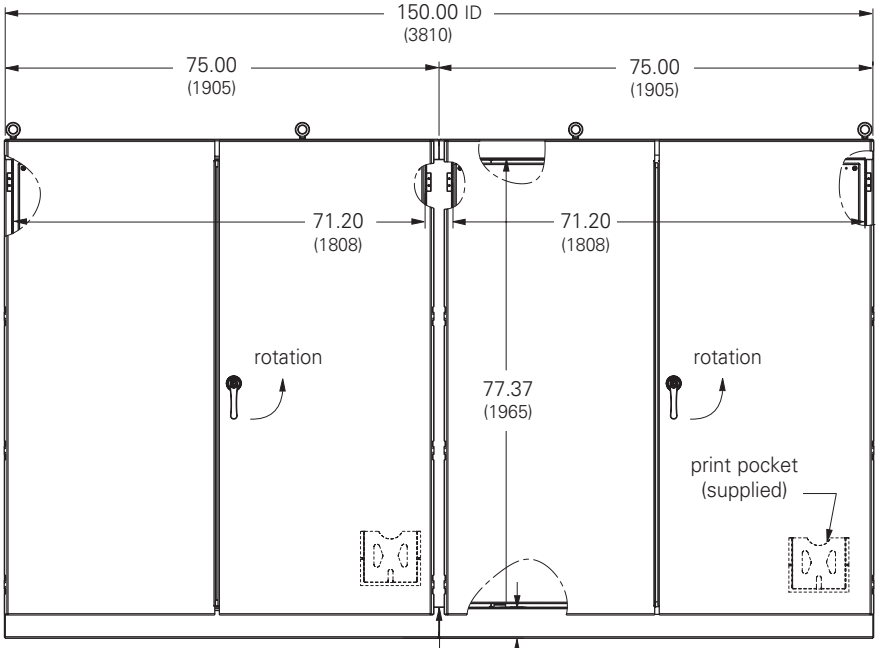

Front View

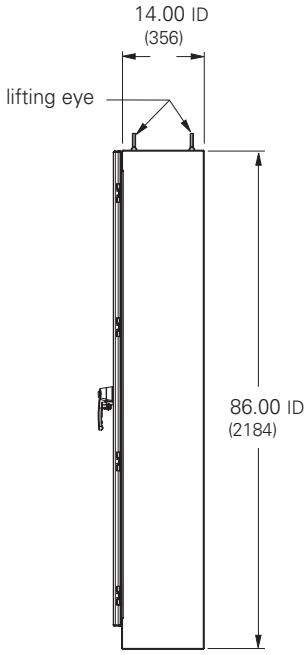

Side View

* From flange opening to bottom of enclosure

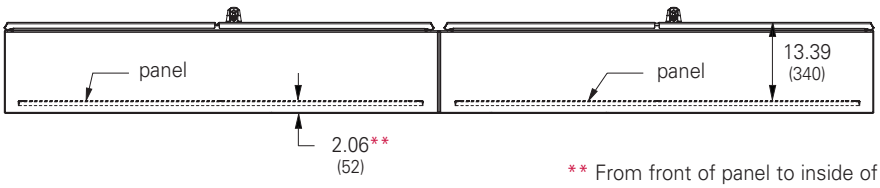

** From front of panel to inside of enclosure

Bottom View

Notes: Dimensions are in inches. Millimeters shown are for reference only. Data subject to change without notice.

Ground-Mount Enclosures
Type 12 Five-Door Free-Standing with 3-Point Locking
Illustration Sheet and Catalog Number

Enclosure Catalog Number	Enclosure Size Height x Width x Depth in.	mm	Body/Door Gauge	Panel A Size Height x Width in.	mm	Panel B Size Height x Width in.	mm
8618714-12FS	86.00 x 187.50 x 14.00	2184 x 4763 x 356	10/12	78.00 x 33.00	1981 x 838	78.00 x 70.00	1981 x 1778

Top View

ID = Inside Dimension

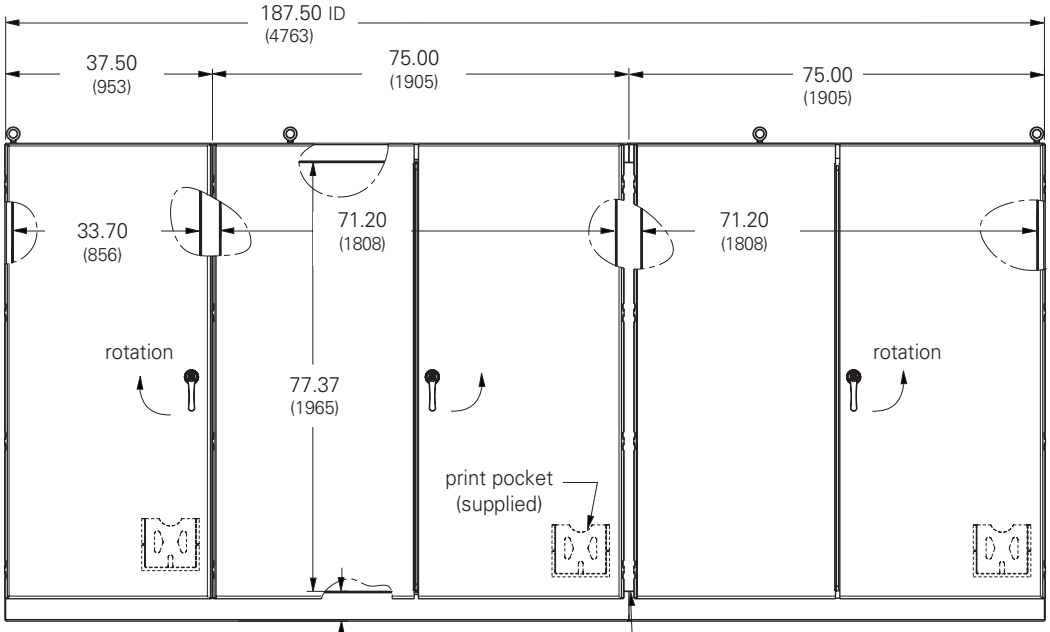

Front View

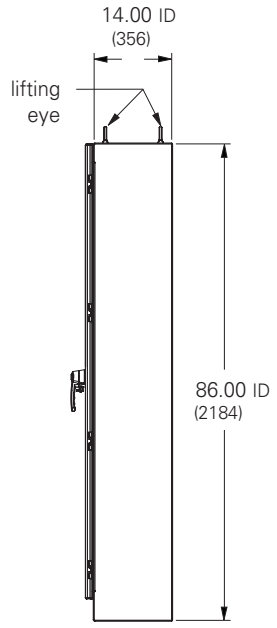

Side View

* From flange opening to bottom of enclosure

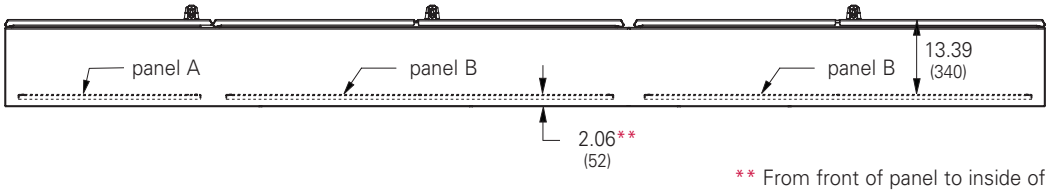

** From front of panel to inside of enclosure

Bottom View

Notes: Dimensions are in inches. Millimeters shown are for reference only. Data subject to change without notice.

JIC Enclosures Type 4 Lift-Off Cover 136-137
JIC Enclosures Type 4 Continuous Hinge Cover 138-139
JIC Enclosures Type 4 JIC Continuous Hinge Cover Quarter-Turn Latches 140-141
Wall-Mount Enclosures Type 4 Single-Door 142-144
Wall-Mount Enclosures Type 4 Premier™ Series Quarter-Turn Latches 145-149
Wall-Mount Enclosures Type 4 Premier™ Series Flush-Mount Quarter-Turn Latches 150-151
Wall-Mount Enclosures Type 12 Premier™ Series Double-Door Quarter-Turn Latches 152-153
Premier™ Series Accessories 154-159
Wall-Mount Enclosures Type 4 Single-Door 3-Point Locking 160-161
Wall-Mount Enclosures Type 4 Double-Door 3-Point Locking 162-163
Floor-Mounted Enclosures Type 4 Double-Door Floor-Standing 164-165
Floor-Mounted Enclosures Type 4 Double-Door Floor-Standing Quarter-Turn Latches 166-167
Ground-Mount Enclosures Type 4 Double-Door Floor-Standing 3-Point Locking 168-169
Ground-Mount Enclosures Type 4 Free-Standing 170-171
Ground-Mount Enclosures Type 4 Free-Standing Quarter-Turn Latches 172-173
Ground-Mount Enclosures Type 4 Single-Door Free-Standing 3-Point Locking 174-175
Ground-Mount Enclosures Type 4 Single-Door Dual-Access Free-Standing 3-Point Locking 176-177
Ground-Mount Enclosures Type 4 Multi-Door Free-Standing 3-Point Locking 177a-177d
Ground-Mount Enclosures Type 4 EnviroShield™ Free-Standing 3-Point Locking 178-179
Free-Standing Enclosure Accessories 180-191

JIC Enclosures
Type 4 Lift-Off Cover
Data Sheet

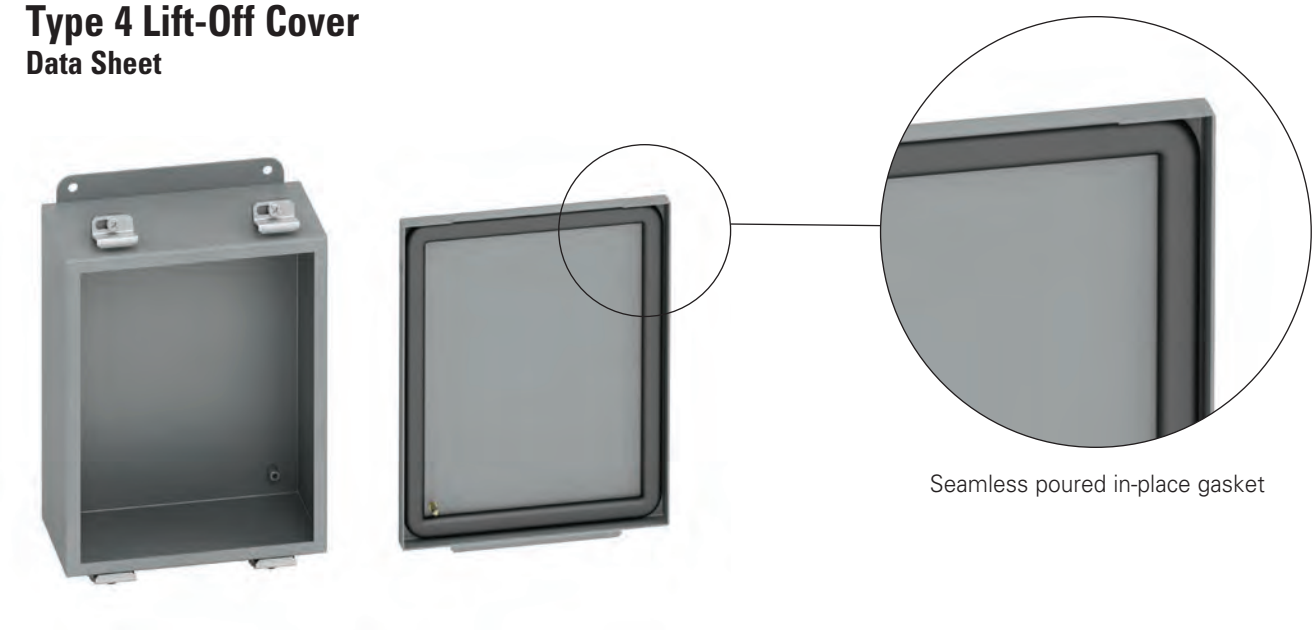

Application
- Houses electrical controls and instruments
- Intended for indoor or outdoor use
- Protects against windblown dust and rain, splashing water and hose directed water

Standards
- UL 508A listed, Type 4, Type 12 and Type 13
- CSA C22.2 No.94 certified, Type 4, Type 12 and Type 13
- Conforms to NEMA standard for Type 4, Type 12 and Type 13

Finish
- Wash and phosphate undercoat
- ANSI 61 gray polyester powder finish

Accessories
- Panels
- JIC terminal strap kit
- JIC terminal strip kit
- Terminal blocks
- Touch-up paint
- See Accessories section

Construction
- Enclosure and cover are fabricated from (16) gauge steel
- All continuous welded seams are finished smooth
- Cover is secured to the body with easy to operate stainless steel screw clamps mounted on all four sides
- Cover has a seamless poured in-place gasket
- Ground stud provided on cover
- #10-32 weldnuts are provided for mounting optional panel on 6" x 4" and larger enclosures
- External mounting feet are provided for secure wall mounting

Discount Schedule: C2

Subclass: DC0

Notes: We can provide special sizes, finishes and other modifications. Consult the factory for your special requirements.

JIC Enclosures
Type 4 Lift-Off Cover
Illustration Sheet and Catalog Number

Enclosure Catalog Number	Enclosure Size Height x Width x Depth A x B x C in.	mm	D in.	mm	E in.	mm	F in.	mm	Panel Catalog Number Painted	Conductive	Panel Size Height x Width in.	mm
443—4LC	4.00 x 4.00 x 3.00	102 x 102 x 76	2.00	51	2.00	51	—	—	—	—	—	—
643—4LC	6.00 x 4.00 x 3.00	152 x 102 x 76	3.00	76	2.00	51	—	—	**AW64P**	**AW64GP**	4.87 x 2.87	124 x 73
863.5—4LC	8.00 x 6.00x x 3.50	203 x 152 x 89	—	—	—	—	2.00	51	**AW86P**	**AW86GP**	6.87 x 4.87	174 x 124
664—4LC	6.00 x 6.00 x 4.00	152 x 152 x 102	3.00	76	3.00	76	—	—	**AW66P**	**AW66GP**	4.87 x 4.87	124 x 124
1084—4LC	10.00 x 8.00 x 4.00	254 x 203 x 102	—	—	—	—	2.00	51	**AW108P**	**AW108GP**	8.87 x 6.87	225 x 174
12105—4LC	12.00 x 10.00 x 5.00	305 x 254 x 127	—	—	—	—	3.00	76	**AW1210P**	**AW1210GP**	10.87 x 8.87	276 x 225
14126—4LC	14.00 x 12.00 x 6.00	356 x 305 x 152	—	—	—	—	3.00	76	**AW1412P**	**AW1412GP**	12.87 x 10.87	327 x 276
16146—4LC	16.00 x 14.00 x 6.00	406 x 356 x 152	—	—	—	—	3.00	76	**AW1614P**	**AW1614GP**	14.87 x 12.87	378 x 327

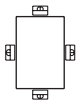

443-4LC
643-4LC
664-4LC

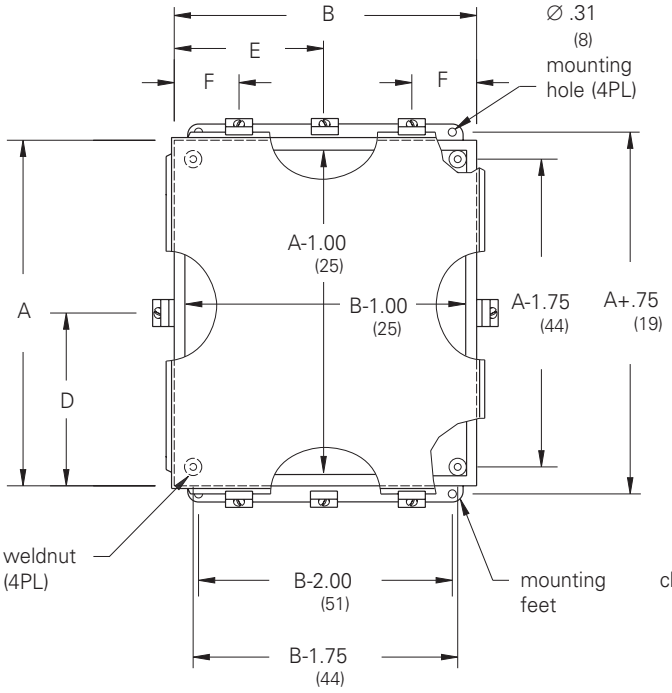

Front View

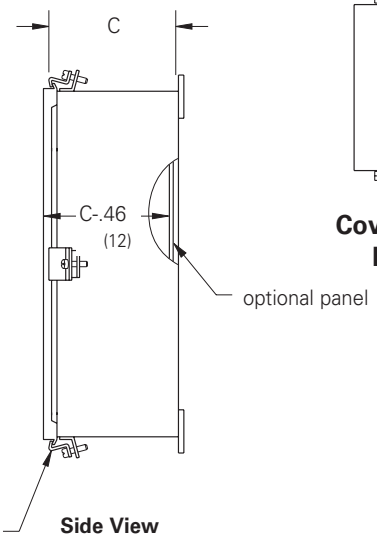

Side View

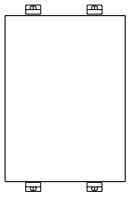

863.5-4LC
1084-4LC
12105-4LC
14126-4LC
16146-4LC

Cover Clamp Layout

Notes: Dimensions are in inches. Millimeters shown are for reference only. Data subject to change without notice.

JIC Enclosures
Type 4 Continuous Hinge Cover
Data Sheet

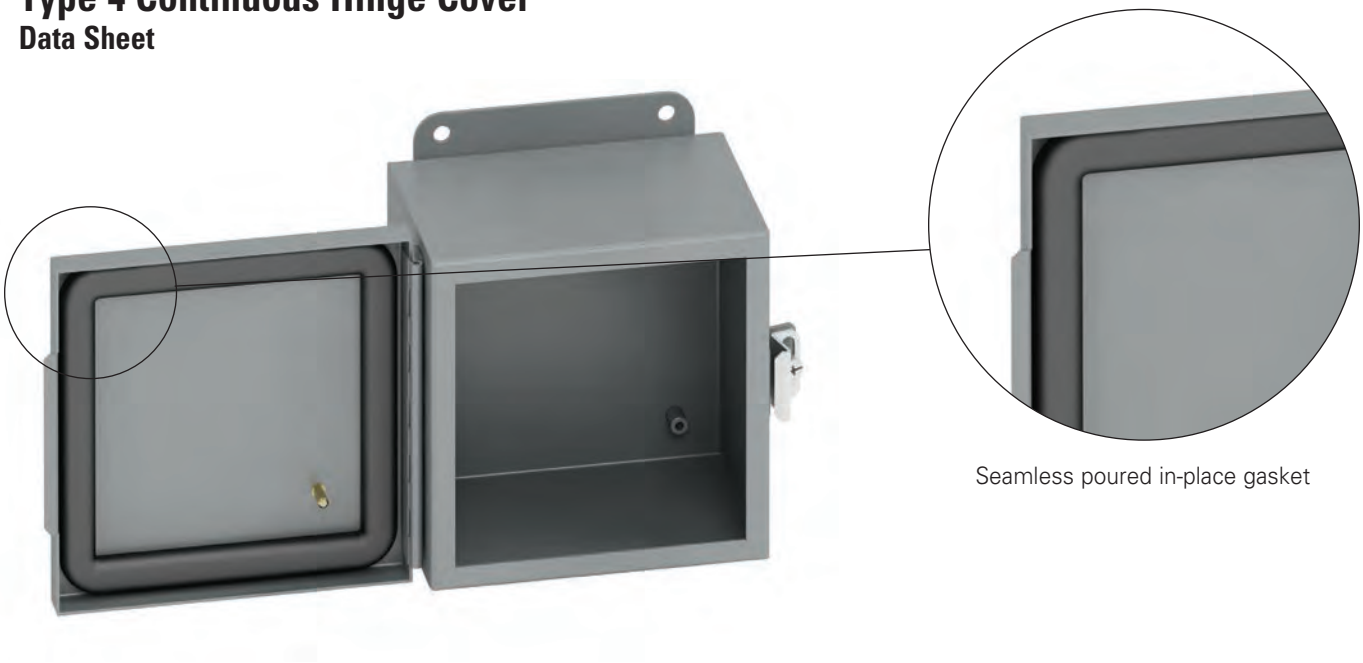

Seamless poured in-place gasket

Application
- Houses electrical controls and instruments
- Intended for indoor or outdoor use
- Protects against windblown dust and rain, splashing water and hose directed water

Standards
- UL 508A listed, Type 4, Type 12 and Type 13
- CSA C22.2 No.94 certified, Type 4, Type 12 and Type 13
- Conforms to NEMA standard for Type 4, Type 12 and Type 13

Finish
- Wash and phosphate undercoat
- ANSI 61 gray polyester powder finish

Accessories
- Panels
- JIC terminal strap kit
- JIC terminal strip kit
- Terminal blocks
- Touch-up paint
- See Accessories section

Construction
- Enclosure and cover are fabricated from (16) gauge steel
- All continuous welded seams are finished smooth
- Cover is secured to the body with a continuous hinge on one side and easy-to-operate stainless steel screw clamps mounted to the opposite side
- Stainless steel hinge pin
- Cover has a seamless poured in-place gasket
- Ground stud provided on cover
- #10-32 weldnuts are provided for mounting optional panel on 6" x 4" and larger enclosures
- External mounting feet are provided for secure wall mounting

Discount Schedule: C2

Subclass: DC0

Notes: We can provide special sizes, finishes and other modifications. Consult the factory for your special requirements.

JIC Enclosures
Type 4 Continuous Hinge Cover
Illustration Sheet and Catalog Number

Enclosure Catalog Number	Enclosure Size Height x Width x Depth A x B x C in.	mm	D in.	mm	E in.	mm	Panel Catalog Number Steel	Conductive	Panel Size Height x Width in.	mm
443-4CHC	4.00 x 4.00 x 3.00	102 x 102 x 76	—	—	2.00	51	—	—	—	—
643-4CHC	6.00 x 4.00 x 3.00	152 x 102 x 76	—	—	3.00	76	AW64P	AW6G4P	4.87 x 2.87	124 x 73
863.5-4CHC	8.00 x 6.00 x 3.50	203 x 152 x 89	2.00	51	—	—	AW86P	AW86GP	6.87 x 4.87	174 x 124
644-4CHC	6.00 x 4.00 x 4.00	152 x 102 x 102	—	—	3.00	76	AW64P	AW64GP	4.87 x 2.87	124 x 73
664-4CHC	6.00 x 6.00 x 4.00	152 x 152 x 102	—	—	3.00	76	AW66P	AW66GP	4.87 x 4.87	124 x 124
1084-4CHC	10.00 x 8.00 x 4.00	254 x 203 x 102	2.00	51	—	—	AW108P	AW108GP	8.87 x 6.87	225 x 174
12105-4CHC	12.00 x 10.00 x 5.00	305 x 254 x 127	3.00	76	—	—	AW1210P	AW1210GP	10.87 x 8.87	276 x 225
1086-4CHC	10.00 x 8.00 x 6.00	254 x 203 x 152	2.00	51	—	—	AW108P	AW108GP	8.87 x 6.87	225 x 174
12126-4CHC	12.00 x 12.00 x 6.00	305 x 305 x 152	3.00	76	—	—	AW1212P	AW1212GP	10.87 x 10.87	276 x 276
14126-4CHC	14.00 x 12.00 x 6.00	356 x 305 x 152	3.00	76	—	—	AW1412P	AW1412GP	12.87 x 10.87	327 x 276
16146-4CHC	16.00 x 14.00 x 6.00	406 x 356 x 152	3.00	76	—	—	AW1614P	AW1614GP	14.87 x 12.87	378 x 327

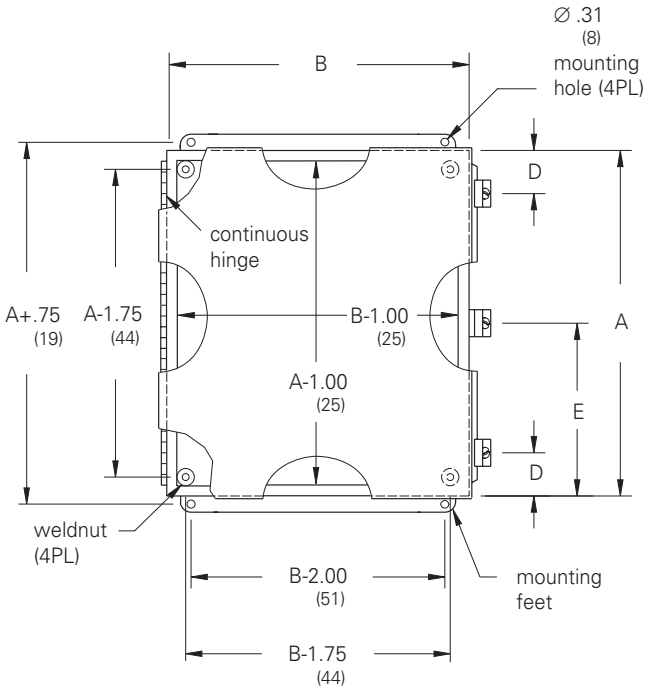

Front View

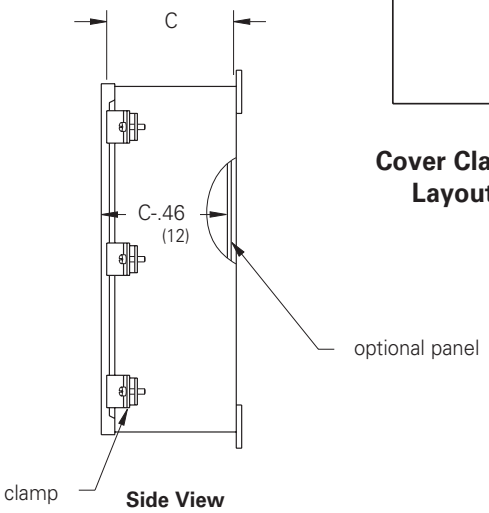

Side View

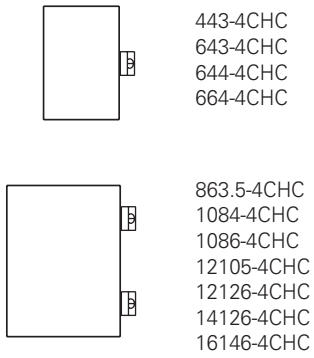

Cover Clamp Layout

Notes: Dimensions are in inches. Millimeters shown are for reference only. Data subject to change without notice.

JIC Enclosures
Type 4 Continuous Hinge Cover with Quarter-Turn Latches
Data and Illustration Sheet

Application
- Houses electrical controls and instruments
- Intended for indoor or outdoor use
- Protects against windblown dust and rain, splashing water and hose directed water

Standards
- UL 508A Listed, Type 4, 12
- CSA C22.2 No.94 certified, Type 4, 12
- Conforms to NEMA Standards for Type 3, 4, 12

Finish
- Wash and phosphate undercoat
- ANSI 61 gray polyester powder finish

Accessories
- Panels
- Swing-out panel kits
- JIC terminal kits
- Window kits
- Locks and latches

Construction
- Enclosure and cover are fabricated from (16) Gauge Steel
- All continuous welded seams are finished smooth
- Continuous hinge with stainless steel hinge pin
- Slotted quarter-turn flush latch(es)
- Cover has a seamless poured in-place gasket
- Ground stud provided on cover
- #10-32 weldnuts are provided for mounting optional panel on 6" x 4" and larger enclosures
- External mounting feet

Discount Schedule: C2

Subclass: DC1

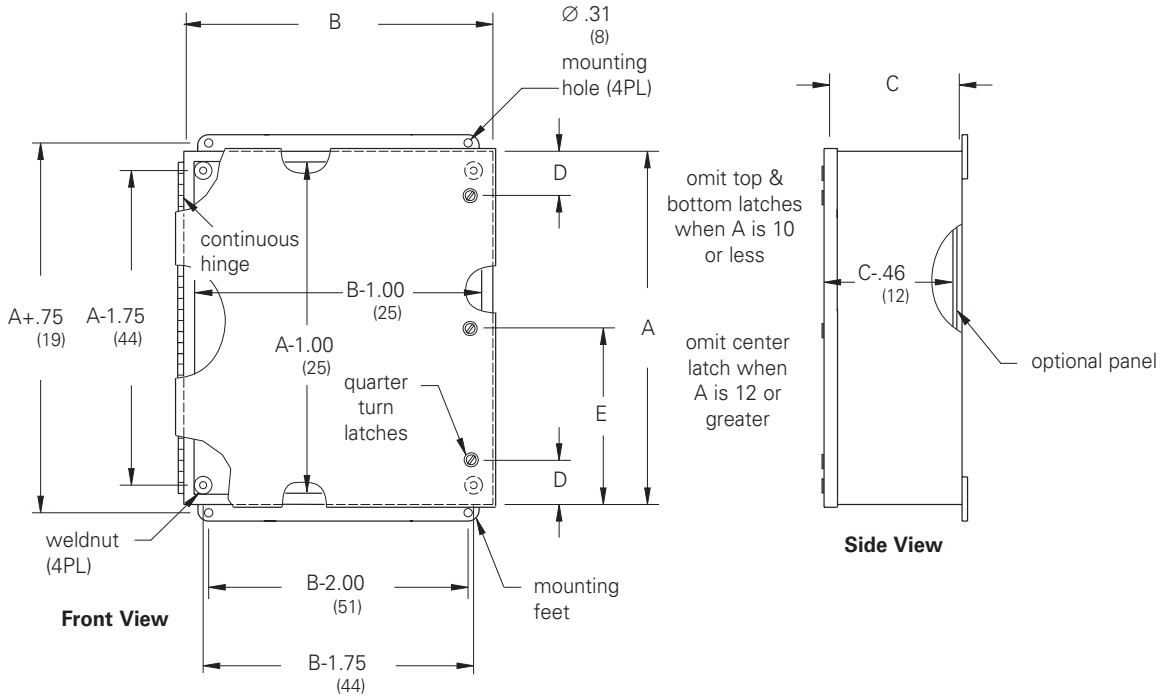

Notes: We can provide special sizes, finishes and other modifications. Consult the factory for your special requirements.

JIC Enclosures
Type 4 Continuous Hinge Cover with Quarter-Turn Latches
Illustration Sheet and Catalog Number

Enclosure Catalog Number	Enclosure Size Height x Width x Depth A x B x C in.	mm	D in.	mm	E in.	mm	Panel Catalog Number	Conductive Catalog Number	Panel Size Panel Height x Width in.	mm
443-4QT	4 x 4 x 3	101 x 101 x 76	—	—	2	51	—	—	—	—
643-4QT	6 x 4 x 3	152 x 101 x 76	—	—	3	76	**AW64P**	**AW64GP**	4.87 x 2.87	123 x 73
863.5-4QT	8 x 6 x 3.5	203 x 152 x 89	—	—	4	101	**AW86P**	**AW86GP**	6.87 x 4.87	174 x 123
864-4QT	8 x 6 x 4	203 x 152 x 101	—	—	4	101	**AW86P**	**AW86GP**	6.87 x 4.87	174 x 123
444-4QT	4 x 4 x 4	101 x 101 x 101	—	—	2	51	—	—	—	—
644-4QT	6 x 4 x 4	152 x 101 x 101	—	—	3	76	**AW64P**	**AW64GP**	4.87 x 2.87	123 x 73
664-4QT	6 x 6 x 4	152 x 152 x 101	—	—	3	76	**AW66P**	**AW66GP**	4.87 x 4.87	123 x 123
884-4QT	8 x 8 x 4	203 x 203 x 101	—	—	4	101	**AW88P**	**AW88GP**	6.87 x 6.87	174 x 174
1084-4QT	10 x 8 x 4	254 x 203 x 101	—	—	5	127	**AW108P**	**AW108GP**	8.87 x 6.87	225 x 174
1264-4QT	12 x 6 x 4	305 x 152 x 101	3	76	—	—	**AW126P**	—	10.87 x 4.87	276 x 123
12105-4QT	12 x 10 x 5	305 x 254 x 127	3	76	—	—	**AW1210P**	**AW1210GP**	10.87 x 8.87	276 x 225
866-4QT	8 x 6 x 6	203 x 152 x 152	—	—	4	101	**AW86P**	**AW86GP**	6.87 x 4.87	174 x 123
886-4QT	8 x 8 x 6	203 x 203 x 152	—	—	4	101	**AW88P**	**AW88GP**	6.87 x 6.87	174 x 174
1086-4QT	10 x 8 x 6	254 x 203 x 152	—	—	5	127	**AW108P**	**AW108GP**	8.87 x 6.87	225 x 174
10106-4QT	10 x 10 x 6	254 x 254 x 152	—	—	5	127	**AW1010P**	**AW1010GP**	8.87 x 8.87	225 x 225
12106-4QT	12 x 10 x 6	305 x 254 x 152	3	76	—	—	**AW1210P**	**AW1210GP**	10.87 x 8.87	276 x 225
12126-4QT	12 x 12 x 6	305 x 305 x 152	3	76	—	—	**AW1212P**	**AW1212GP**	10.87 x 10.87	276 x 276
1486-4QT	14 x 8 x 6	355 x 203 x 152	3	76	—	—	**AW148P**	—	12.87 x 6.87	327 x 174
14126-4QT	14 x 12 x 6	355 x 305 x 152	3	76	—	—	**AW1412P**	**AW1412GP**	12.87 x 10.87	327 x 276
16106-4QT	16 x 10 x 6	406 x 254 x 152	3	76	—	—	**AW1610P**	—	14.87 x 8.87	377 x 225
16146-4QT	16 x 14 x 6	406 x 355 x 152	3	76	—	—	**AW1614P**	**AW1614GP**	14.87 x 12.87	377 x 327
12108-4QT	12 x 10 x 8	305 x 254 x 203	3	76	—	—	**AW1210P**	**AW1210GP**	10.87 x 8.87	276 x 225
14128-4QT	14 x 12 x 8	355 x 305 x 203	3	76	—	—	**AW1412P**	**AW1412GP**	12.87 x 10.87	327 x 276
16148-4QT	16 x 14 x 8	406 x 355 x 203	3	76	—	—	**AW1614P**	**AW1614GP**	14.87 x 12.87	377 x 327
161410-4QT	16 x 14 x 10	406 x 355 x 254	3	76	—	—	**AW1614P**	**AW1614GP**	14.87 x 12.87	377 x 327

Quarter-Turn Latch Layout

443-4QT
643-4QT
863.5-4QT
864-4QT
444-4QT
644-4QT
664-4QT
884-4QT
866-4QT
886-4QT
1084-4QT
1086-4QT
10106-4QT

1264-4QT
12105-4QT
12106-4QT
12126-4QT
1486-4QT
14126-4QT
16106-4QT
16146-4QT
12108-4QT
14128-4QT
16148-4QT
161410-4QT

Notes: Dimensions are in inches. Millimeters shown are for reference only. Data subject to change without notice.

Wall-Mount Enclosures
Type 4 Single-Door
Data Sheet

Application
- Houses electrical controls and instruments
- Intended for indoor or outdoor use
- Protects against windblown dust and rain, splashing water and hose directed water

Standards
- UL 508A listed, Type 4, Type 12 and Type 13
- CSA C22.2 No.94 certified, Type 4, Type 12 and Type 13
- Conforms to NEMA standard for Type 4,Type 12 and Type 13

Finish
- Wash and phosphate undercoat
- ANSI 61 gray polyester powder finish

Accessories
- Panels
- NEMA terminal strap kit
- Terminal blocks
- Door lock kit
- Floor stand kit
- Touch-up paint
- See Accessories section

Construction
- Enclosure and door are fabricated from code gauge steel, (see table, page 144)
- All continuous welded seams are finished smooth
- Doors are secured to the body with a heavy-duty continuous hinge on one side and easy-to-release stainless steel door clamps mounted to the other three sides
- Ground stud provided on door and body
- Formed lip around enclosure opening diverts liquids and contaminants
- Each door has a padlock hasp with sealing hole provision
- Print pocket provided
- Door has a seamless poured in-place gasket
- .375-16 collar studs are provided for mounting optional panel
- External mounting feet are provided for secure wall mounting

Discount Schedule: C2

Subclass: DF0

Notes: We can provide special sizes, finishes and other modifications. Consult the factory for your special requirements.

Wall-Mount Enclosures
Type 4 Single-Door
Illustration Sheet

See page 144 for dimensions

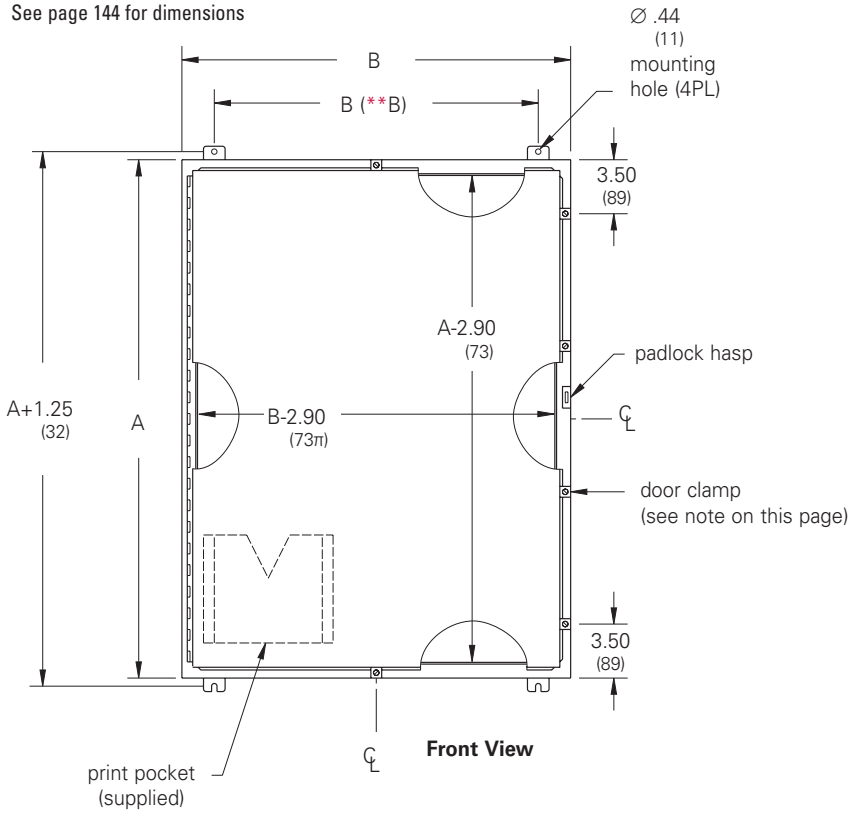

Front View

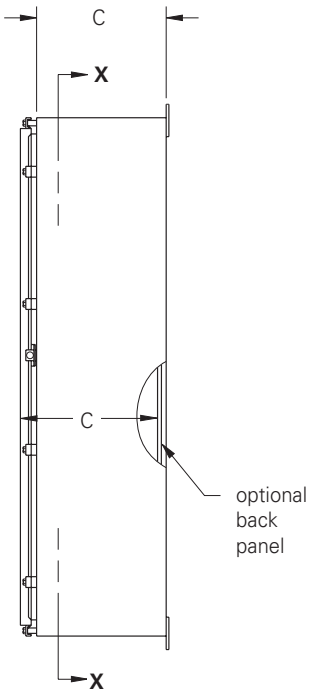

Side View

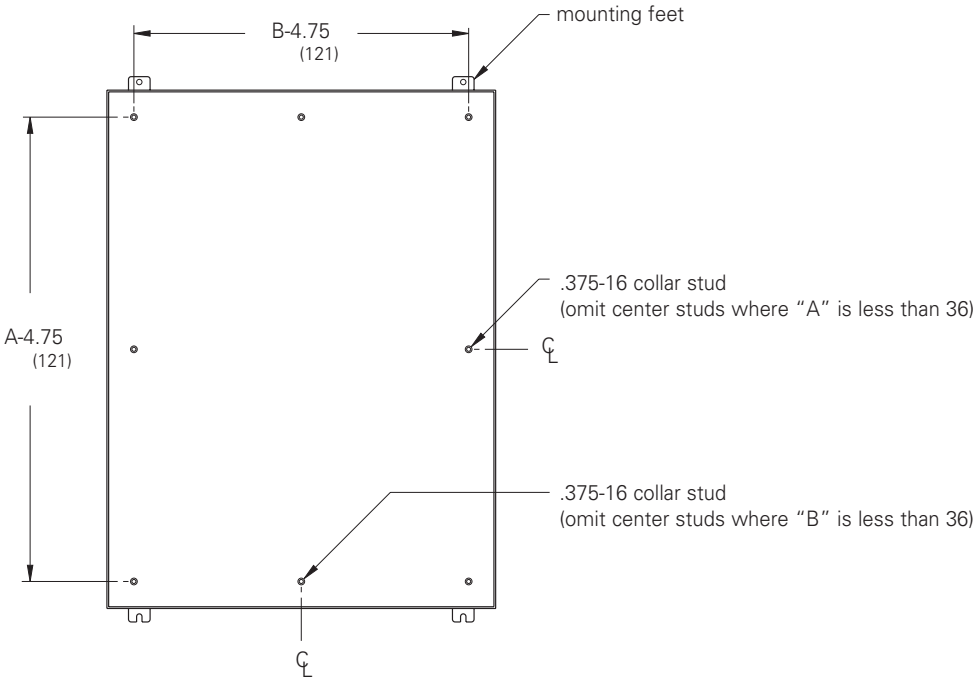

Section X-X

Notes: Dimensions: **B = (-2.50) if 12 inches wide; (-6.00) if wider than 12 inches. Clamps are mounted along three sides of the enclosure door. Spacing between clamps along side opposite the hinge does not exceed 15 inches.
Dimensions are in inches. Millimeters shown are for reference only. Data subject to change without notice.

Wall-Mount Enclosures
Type 4 Single-Door
Catalog Number

Enclosure	Enclosure Size Height x Width x Depth A x B x C			Panel		Panel Size Height x Width	
Catalog Number	in.	mm	Gauge	Painted	Conductive	in.	mm
16126-4	16.00 x 12.00 x 6.00	406 x 305 x 152	16	**AW1612P**	**AW1612GP**	13.00 x 9.00	330 x 229
16166-4	16.00 x 16.00 x 6.00	406 x 406 x 152	16	**AW1616P**	**AW1616GP**	13.00 x 13.00	330 x 330
16206-4	16.00 x 20.00 x 6.00	406 x 508 x 152	16	**AW2016P**	**AW2016GP**	13.00 x 17.00	330 x 432
20166-4	20.00 x 16.00 x 6.00	508 x 406 x 152	16	**AW2016P**	**AW2016GP**	17.00 x 13.00	432 x 330
20206-4	20.00 x 20.00 x 6.00	508 x 508 x 152	16	**AW2020P**	**AW2020GP**	17.00 x 17.00	432 x 432
24126-4	24.00 x 12.00 x 6.00	610 x 305 x 152	16	**AW2412P**	—	21.00 x 9.00	533 x 229
24166-4	24.00 x 16.00 x 6.00	610 x 406 x 152	16	**AW2416P**	**AW2416GP**	21.00 x 13.00	533 x 330
24206-4	24.00 x 20.00 x 6.00	610 x 508 x 152	16	**AW2420P**	**AW2420GP**	20.87 x 16.87	530 x 428
24246-4	24.00 x 24.00 x 6.00	610 x 610 x 152	14	**AW2424P**	**AW2424GP**	20.87 x 20.87	530 x 530
30206-4	30.00 x 20.00 x 6.00	762 x 508 x 152	14	**AW3020P**	**AW3020GP**	26.87 x 16.87	682 x 428
30246-4	30.00 x 24.00 x 6.00	762 x 610 x 152	14	**AW3024P**	**AW3024GP**	26.87 x 20.87	682 x 530
36246-4	36.00 x 24.00 x 6.00	914 x 610 x 152	14	**AW3624P**	**AW3624GP**	32.87 x 20.87	835 x 530
16128-4	16.00 x 12.00 x 8.00	406 x 305 x 203	16	**AW1612P**	**AW1612GP**	13.00 x 9.00	330 x 229
20168-4	20.00 x 16.00 x 8.00	508 x 406 x 203	16	**AW2016P**	**AW2016GP**	17.00 x 13.00	432 x 330
20208-4	20.00 x 20.00 x 8.00	508 x 508 x 203	16	**AW2020P**	**AW2020GP**	17.00 x 17.00	432 x 432
20248-4	20.00 x 24.00 x 8.00	508 x 610 x 203	16	**AW2420P**	**AW2420GP**	16.87 x 20.87	428 x 530
24208-4	24.00 x 20.00 x 8.00	610 x 508 x 203	16	**AW2420P**	**AW2420GP**	20.87 x 16.87	530 x 428
24248-4	24.00 x 24.00 x 8.00	610 x 610 x 203	14	**AW2424P**	**AW2424GP**	20.87 x 20.87	530 x 530
24308-4	24.00 x 30.00 x 8.00	610 x 762 x 203	14	**AW3024P**	**AW3024GP**	20.87 x 26.87	530 x 682
30208-4	30.00 x 20.00 x 8.00	762 x 508 x 203	14	**AW3020P**	**AW3020GP**	26.87 x 16.87	682 x 428
30248-4	30.00 x 24.00 x 8.00	762 x 610 x 203	14	**AW3024P**	**AW3024GP**	26.87 x 20.87	682 x 530
30308-4	30.00 x 30.00 x 8.00	762 x 762 x 203	14	**AW3030P**	**AW3030GP**	26.87 x 26.87	682 x 682
36248-4	36.00 x 24.00 x 8.00	914 x 610 x 203	14	**AW3624P**	**AW3624GP**	32.87 x 20.87	835 x 530
36308-4	36.00 x 30.00 x 8.00	914 x 762 x 203	14	**AW3630P**	**AW3630GP**	32.87 x 26.87	835 x 682
42308-4	42.00 x 30.00 x 8.00	1067 x 762 x 203	14	**AW4230P**	**AW4230GP**	38.87 x 26.87	987 x 682
42368-4	42.00 x 36.00 x 8.00	1067 x 914 x 203	14	**AW4236P**	**AW4236GP**	38.87 x 32.87	987 x 835
48368-4	48.00 x 36.00 x 8.00	1219 x 914 x 203	14	**AW4836P**	**AW4836GP**	44.87 x 32.87	1140 x 835
60368-4	60.00 x 36.00 x 8.00	1524 x 914 x 203	14	**AW6036P**	**AW6036GP**	56.87 x 32.87	1444 x 835
201610-4	20.00 x 16.00 x 10.00	508 x 406 x 254	16	**AW2016P**	**AW2016GP**	17.00 x 13.00	432 x 330
242010-4	24.00 x 20.00 x 10.00	610 x 508 x 254	16	**AW2420P**	**AW2420GP**	20.87 x 16.87	530 x 428
302410-4	30.00 x 24.00 x 10.00	762 x 610 x 254	14	**AW3024P**	**AW3024GP**	26.87 x 20.87	682 x 530
363010-4	36.00 x 30.00 x 10.00	914 x 762 x 254	14	**AW3630P**	**AW3630GP**	32.87 x 26.87	835 x 682
483010-4	48.00 x 30.00 x 10.00	1219 x 762 x 254	14	**AW4830P**	**AW4830GP**	44.87 x 26.87	1140 x 682
483610-4	48.00 x 36.00 x 10.00	1219 x 914 x 254	14	**AW4836P**	**AW4836GP**	44.87 x 32.87	1140 x 835
603610-4	60.00 x 36.00 x 10.00	1524 x 914 x 254	14	**AW6036P**	**AW6036GP**	56.87 x 32.87	1444 x 835
302412-4	30.00 x 24.00 x 12.00	762 x 610 x 305	14	**AW3024P**	**AW3024GP**	26.87 x 20.87	682 x 530
363012-4	36.00 x 30.00 x 12.00	914 x 762 x 305	14	**AW3630P**	**AW3630GP**	32.87 x 26.87	835 x 682
483612-4	48.00 x 36.00 x 12.00	1219 x 914 x 305	14	**AW4836P**	**AW4836GP**	44.87 x 32.87	1140 x 835
363016-4	36.00 x 30.00 x 16.00	914 x 762 x 406	14	**AW3630P**	**AW3630GP**	32.87 x 26.87	835 x 682
483616-4	48.00 x 36.00 x 16.00	1219 x 914 x 406	14	**AW4836P**	**AW4836GP**	44.87 x 32.87	1140 x 835
603616-4	60.00 x 36.00 x 16.00	1524 x 914 x 406	14	**AW6036P**	**AW6036GP**	56.87 x 32.87	1444 x 835

See page 145 for drawings

Notes: Dimensions are in inches. Millimeters shown are for reference only. Data subject to change without notice.

Wall-Mount Enclosures
Type 4 Premier™ Series with Quarter-Turn Latches
Data Sheet and Catalog Number

Application
- Houses electrical controls and instruments
- Intended for indoor or outdoor use
- Protects against circulating and windblown dust, falling dirt, dripping non-corrosive liquids, rain, splashing water and hose directed water

Standards
- UL 508A Listed, Type 4 and Type 12
- cUL Listed, Type 4 and Type 12
- Conforms to NEMA standard for Type 4 and Type 12
- Wall-mounting brackets required to maintain UL/CSA external mounting requirements

Finish
- Wash and phosphate undercoat
- ANSI 61 gray polyester powder finish
- Available with RAL7035 Light Gray textured paint. To order add an "LG" to the end of the part number as shown in the tables (pages 146 - 149)

Discount Schedule: C2

Subclass: TC0

Accessories
- Premier panels
- Security latch inserts
- NEMA panel adapters
- Mounting foot kits
- Depth adjustment brackets
- EIA/TIA rack mounting angles
- Print pockets
- Swing-out panels
- Single point padlockable or keyed handles
- 3-point (3PT) handle: SD-KHB
- See Accessories section, pages 154-159

Construction
- Enclosure and door are fabricated from code gauge steel (see tables, pages 146 - 149)
- All continuous welded seams are finished smooth
- Hardware kit provided contains grounding hardware, .312-18 flanged hex nuts for panel mounting, and sealing washers for body mounting holes

Body Construction
- Body flange trough design is formed around body opening to divert liquid contaminants away from door opening
- Reduced width flange design increases enclosure opening
- Ground stud provided on enclosure body and on door
- .312-18 collar studs are provided for mounting optional Premier panels
- Enclosure mounting holes in body provided for direct mounting or optional mounting feet

Door Construction
- Doors are secured to the body with concealed hinge design on one side and slotted quarter-turn flush latch(es) on the opposite side
- Doors are easily removed and interchangeable
- Door has a seamless poured in-place gasket
- Door opens 180° for easy access
- A slotted quarter-turn 3-point latching system is provided when the height is equal to or greater than 42"
- Window-door enclosures feature flush-mounted clear polycarbonate window

Notes: We can provide special sizes, finishes and other modifications. Consult the factory for your special requirements.

Wall-Mount Enclosures
Type 4 Premier™ Series with Quarter-Turn Latches
Catalog Number

Enclosure Catalog Number				Enclosure Size			Panel	Panel Size	
Solid Door		Window Door		A x B x C		Door/Body	Catalog	H x W	
ANSI 61 Gray	RAL7035 Lt. Gray	ANSI 61 Gray	RAL7035 Lt. Gray	in.	mm	Gauge	Number	in.	mm
1084-SD	1084-SDLG	—	—	10 x 8 x 4	254 x 203 x 102	16/16	108P	8.00 x 6.00	203 x 152
1086-SD	1086-SDLG	—	—	10 x 8 x 6	254 x 203 x 152	16/16	108P	8.00 x 6.00	203 x 152
12106-SD	12106-SDLG	—	—	12 x 10 x 6	305 x 254 x 152	16/16	1210P	10.00 x 8.00	254 x 203
12126-SD	12126-SDLG	12126-SDW	12126-SDWLG	12 x 12 x 6	305 x 305 x 152	16/16	1212P	10.00 x 10.00	254 x 254
16126-SD	16126-SDLG	16126-SDW	16126-SDWLG	16 x 12 x 6	406 x 305 x 152	16/16	1612P	14.00 x 10.00	356 x 254
16166-SD	16166-SDLG	—	—	16 x 16 x 6	406 x 406 x 152	16/16	1616P	14.00 x 14.00	356 x 356
16206-SD	16206-SDLG	—	—	16 x 20 x 6	406 x 508 x 152	16/16	2016P	14.00 x 18.00	356 x 457
20166-SD	20166-SDLG	20166-SDW	20166-SDWLG	20 x 16 x 6	508 x 406 x 152	16/16	2016P	18.00 x 14.00	457 x 356
20206-SD	20206-SDLG	20206-SDW	20206-SDWLG	20 x 20 x 6	508 x 508 x 152	16/16	2020P	18.00 x 18.00	457 x 457
24166-SD	24166-SDLG	—	—	24 x 16 x 6	610 x 406 x 152	16/16	2416P	22.00 x 14.00	559 x 356
24206-SD	24206-SDLG	24206-SDW	—	24 x 20 x 6	610 x 508 x 152	16/16	2420P	22.00 x 18.00	559 x 457
24246-SD	24246-SDLG	24246-SDW	24246-SDWLG	24 x 24 x 6	610 x 610 x 152	14/16	2424P	22.00 x 22.00	559 x 559
16128-SD	16128-SDLG	16128-SDW	16128-SDWLG	16 x 12 x 8	406 x 305 x 203	16/16	1612P	14.00 x 10.00	356 x 254
16168-SD	16168-SDLG	—	—	16 x 16 x 8	406 x 406 x 203	16/16	1616P	14.00 x 14.00	356 x 356
16208-SD	16208-SDLG	—	—	16 x 20 x 8	406 x 508 x 203	16/16	2016P	14.00 x 18.00	356 x 457
20168-SD	20168-SDLG	20168-SDW	20168-SDWLG	20 x 16 x 8	508 x 406 x 203	16/16	2016P	18.00 x 14.00	457 x 356
20208-SD	20208-SDLG	20208-SDW	20208-SDWLG	20 x 20 x 8	508 x 508 x 203	16/16	2020P	18.00 x 18.00	457 x 457
20248-SD	20248-SDLG	—	—	20 x 24 x 8	508 x 610 x 203	16/16	2420P	18.00 x 22.00	457 x 559
24168-SD	24168-SDLG	—	—	24 x 16 x 8	610 x 406 x 203	16/16	2416P	22.00 x 14.00	559 x 356
24208-SD	24208-SDLG	24208-SDW	—	24 x 20 x 8	610 x 508 x 203	16/16	2420P	22.00 x 18.00	559 x 457
24248-SD	24248-SDLG	24248-SDW	24248-SDWLG	24 x 24 x 8	610 x 610 x 203	14/16	2424P	22.00 x 22.00	559 x 559
24308-SD	24308-SDLG	—	—	24 x 30 x 8	610 x 762 x 203	14/16	3024P	22.00 x 28.00	559 x 711
30208-SD	30208-SDLG	—	—	30 x 20 x 8	762 x 508 x 203	14/16	3020P	28.00 x 18.00	711 x 457
30248-SD	30248-SDLG	30248-SDW	30248-SDWLG	30 x 24 x 8	762 x 610 x 203	14/16	3024P	28.00 x 22.00	711 x 559
30308-SD	30308-SDLG	—	—	30 x 30 x 8	762 x 762 x 203	14/14	3030P	28.00 x 28.00	711 x 711
36248-SD	36248-SDLG	—	—	36 x 24 x 8	914 x 610 x 203	14/14	3624P	34.00 x 22.00	864 x 559
36308-SD	36308-SDLG	—	—	36 x 30 x 8	914 x 762 x 203	14/14	3630P	34.00 x 28.00	864 x 711
36368-SD	36368-SDLG	—	—	36 x 36 x 8	914 x 914 x 203	14/14	3636P	34.00 x 34.00	864 x 864
161210-SD	161210-SDLG	161210-SDW	—	16 x 12 x 10	406 x 305 x 254	16/16	1612P	14.00 x 10.00	356 x 254
161610-SD	161610-SDLG	—	—	16 x 16 x 10	406 x 406 x 254	16/16	1616P	14.00 x 14.00	356 x 356
162010-SD	162010-SDLG	—	—	16 x 20 x 10	406 x 508 x 254	16/16	2016P	14.00 x 18.00	356 x 457
201610-SD	201610-SDLG	201610-SDW	201610-SDWLG	20 x 16 x 10	508 x 406 x 254	16/16	2016P	18.00 x 14.00	457 x 356
202010-SD	202010-SDLG	202010-SDW	202010-SDWLG	20 x 20 x 10	508 x 508 x 254	16/16	2020P	18.00 x 18.00	457 x 457
202410-SD	202410-SDLG	—	—	20 x 24 x 10	508 x 610 x 254	16/16	2420P	18.00 x 22.00	457 x 559
241610-SD	241610-SDLG	—	—	24 x 16 x 10	610 x 406 x 254	16/16	2416P	22.00 x 14.00	559 x 356
242010-SD	242010-SDLG	242010-SDW	242010-SDWLG	24 x 20 x 10	610 x 508 x 254	16/16	2420P	22.00 x 18.00	559 x 457
242410-SD	242410-SDLG	242410-SDW	242410-SDWLG	24 x 24 x 10	610 x 610 x 254	14/16	2424P	22.00 x 22.00	559 x 559
243010-SD	243010-SDLG	—	—	24 x 30 x 10	610 x 762 x 254	14/16	3024P	22.00 x 28.00	559 x 711
302010-SD	302010-SDLG	—	—	30 x 20 x 10	762 x 508 x 254	14/16	3024P	28.00 x 18.00	711 x 457
302410-SD	302410-SDLG	302410-SDW	302410-SDWLG	30 x 24 x 10	762 x 610 x 254	14/16	3024P	28.00 x 22.00	711 x 559
303010-SD	303010-SDLG	—	—	30 x 30 x 10	762 x 762 x 254	14/14	3030P	28.00 x 28.00	711 x 711
362410-SD	362410-SDLG	—	—	36 x 24 x 10	914 x 610 x 254	14/14	3624P	34.00 x 22.00	864 x 559
363010-SD	363010-SDLG	—	—	36 x 30 x 10	914 x 762 x 254	14/14	3630P	34.00 x 28.00	864 x 711
423010-SD	—	—	—	42 x 30 x 10	1067 x 762 x 254	14/14	4230P	40.00 x 28.00	1016 x 711
363610-SD	363610-SDLG	—	—	36 x 36 x 10	914 x 914 x 254	14/14	3636P	34.00 x 34.00	864 x 864
423610-SD	423610-SDLG	—	—	42 x 36 x 10	1067 x 914 x 254	14/14	4236P	40.00 x 34.00	1016 x 864
482410-SD	482410-SDLG	—	—	48 x 24 x 10	1219 x 610 x 254	14/14	4824P	46.00 x 22.00	1168 x 559
483010-SD	—	—	—	48 x 30 x 10	1219 x 762 x 254	14/14	3048P	46.00 x 28.00	1168 x 711
483610-SD	483610-SDLG	—	—	48 x 36 x 10	1219 x 914 x 254	14/14	4836P	46.00 x 34.00	1168 x 864
603610-SD	603610-SDLG	—	—	60 x 36 x 10	1524 x 914 x 254	14/14	6036P	58.00 x 34.00	1473 x 86
202012-SD	202012-SDLG	202012-SDW	202012-SDWLG	20 x 20 x 12	508 x 508 x 305	16/16	2020P	18.00 x 18.00	457 x 457
242012-SD	242012-SDLG	242012-SDW	242012-SDWLG	24 x 20 x 12	610 x 508 x 305	16/16	2420P	22.00 x 18.00	559 x 457
242412-SD	242412-SDLG	242412-SDW	242412-SDWLG	24 x 24 x 12	610 x 610 x 305	14/16	2424P	22.00 x 22.00	559 x 559

Notes: Dimensions are in inches. Millimeters shown are for reference only. Data subject to change without notice.

Wall-Mount Enclosures
Type 4 Premier™ Series with Quarter-Turn Latches
Catalog Number cont. from page 146

Enclosure Catalog Number				Mounting		Window Size		Latch				
Solid Door		Window Door		D x E		F x G		Quantity	J		K	
ANSI 61 Gray	RAL7035 Lt. Gray	ANSI 61 Gray	RAL7035 Lt. Gray	in.	mm	in.	mm		in.	mm		
1084—SD	1084—SDLG	—	—	8.50 x 6.37	216 x 162	—	—	1	—	—	5.00	127
1086—SD	1086—SDLG	—	—	8.50 x 6.37	216 x 162	—	—	1	—	—	5.00	127
12106—SD	12106—SDLG	—	—	10.50 x 8.37	267 x 213	—	—	1	—	—	6.00	152
12126—SD	12126—SDLG	12126—SDW	12126—SDWLG	10.50 x 10.37	267 x 264	8.25 x 7.00	210 x 178	1	—	—	6.00	152
16126—SD	16126—SDLG	16126—SDW	16126—SDWLG	14.50 x 10.37	368 x 264	12.25 x 7.00	311 x 178	1	—	—	8.00	203
16166—SD	16166—SDLG	—	—	14.50 x 14.37	368 x 365	—	—	1	—	—	8.00	203
16206—SD	16206—SDLG	—	—	14.50 x 18.37	368 x 467	—	—	1	—	—	8.00	203
20166—SD	20166—SDLG	20166—SDW	20166—SDWLG	18.50 x 14.37	470 x 365	16.25 x 11.00	413 x 279	1	—	—	10.00	254
20206—SD	20206—SDLG	20206—SDW	20206—SDWLG	18.50 x 18.37	470 x 467	16.25 x 15.00	413 x 381	1	—	—	10.00	254
24166—SD	24166—SDLG	—	—	22.50 x 14.37	572 x 365	—	—	1	—	—	12.00	305
24206—SD	24206—SDLG	24206—SDW	—	22.50 x 18.37	572 x 467	20.25 x 15.00	514 x 381	1	—	—	12.00	305
24246—SD	24246—SDLG	24246—SDW	24246—SDWLG	22.50 x 22.37	572 x 568	20.25 x 17.62	514 x 448	1	—	—	12.00	305
16128—SD	16128—SDLG	16128—SDW	16128—SDWLG	14.50 x 10.37	368 x 264	12.25x7.00	311x178	1	—	—	8.00	203
16168—SD	16168—SDLG	—	—	14.50 x 14.37	368 x 365	—	—	1	—	—	8.00	203
16208—SD	16208—SDLG	—	—	14.50 x 18.37	368 x 467	—	—	1	—	—	8.00	202
20168—SD	20168—SDLG	20168—SDW	20168—SDWLG	18.50 x 14.37	470 x 365	16.25 x 11.00	413 x 279	1	—	—	10.00	254
20208—SD	20208—SDLG	20208—SDW	20208—SDWLG	18.50 x 18.37	470 x 467	16.25 x 15.00	413 x 381	1	—	—	10.00	254
20248—SD	20248—SDLG	—	—	18.50 x 22.37	470 x 568	—	—	1	—	—	10.00	254
24168—SD	24168—SDLG	—	—	22.50 x 14.37	572 x 365	—	—	1	—	—	12.00	305
24208—SD	24208—SDLG	24208—SDW	—	22.50 x 18.37	572 x 467	20.25 x 15.00	514 x 381	1	—	—	12.00	305
24248—SD	24248—SDLG	24248—SDW	24248—SDWLG	22.50 x 22.37	572 x 568	20.25 x 17.62	514 x 448	2	5.00	127	—	—
24308—SD	24308—SDLG	—	—	22.50 x 28.37	572 x 721	—	—	2	5.00	127	—	—
30208—SD	30208—SDLG	—	—	28.50 x 18.37	724 x 467	—	—	2	5.00	127	—	—
30248—SD	30248—SDLG	30248—SDW	30248—SDWLG	28.50 x 22.37	724 x 568	26.25 x 17.62	667 x 448	2	5.00	127	—	—
30308—SD	30308—SDLG	—	—	28.50 x 28.37	724 x 721	—	—	2	5.00	127	—	—
36248—SD	36248—SDLG	—	—	34.50 x 22.37	876 x 568	—	—	2	5.00	127	—	—
36308—SD	36308—SDLG	—	—	34.50 x 28.37	876 x 721	—	—	2	5.00	127	—	—
36368—SD	36368—SDLG	—	—	34.50 x 34.37	876 x 873	—	—	2	5.00	127	—	—
161210—SD	161210—SDLG	161210—SDW	—	14.50 x 10.37	368 x 264	12.25 x 7.00	311 x 178	1	—	—	8.00	203
161610—SD	161610—SDLG	—	—	14.50 x 14.37	368 x 365	—	—	1	—	—	8.00	203
162010—SD	162010—SDLG	—	—	14.50 x 18.37	368 x 467	—	—	1	—	—	8.00	203
201610—SD	201610—SDLG	201610—SDW	201610—SDWLG	18.50 x 14.37	470 x 365	16.25 x 11.00	413 x 279	1	—	—	10.00	254
202010—SD	202010—SDLG	202010—SDW	202010—SDWLG	18.50 x 18.37	470 x 467	16.25 x 15.00	413 x 381	1	—	—	10.00	254
202410—SD	202410—SDLG	—	—	18.50 x 22.37	470 x 568	—	—	1	—	—	10.00	254
241610—SD	241610—SDLG	—	—	22.50 x 14.37	572 x 365	—	—	1	—	—	12.00	305
242010—SD	242010—SDLG	242010—SDW	242010—SDWLG	22.50 x 18.37	572 x 467	20.25 x 15.00	514 x 381	1	—	—	12.00	305
242410—SD	242410—SDLG	242410—SDW	242410—SDWLG	22.50 x 22.37	572 x 568	20.25 x 17.62	514 x 448	2	5.00	127	—	—
243010—SD	243010—SDLG	—	—	22.50 x 28.37	572 x 721	—	—	2	5.00	127	—	—
302010—SD	302010—SDLG	—	—	28.50 x 18.37	724 x 467	—	—	2	5.00	127	—	—
302410—SD	302410—SDLG	302410—SDW	302410—SDWLG	28.50 x 22.37	724 x 568	26.25 x 17.62	667 x 448	2	5.00	127	—	—
303010—SD	303010—SDLG	—	—	28.50 x 28.37	724 x 721	—	—	2	5.00	127	—	—
362410—SD	362410—SDLG	—	—	34.50 x 22.37	876 x 568	—	—	2	5.00	127	—	—
363010—SD	363010—SDLG	—	—	34.50 x 28.37	876 x 721	—	—	2	5.00	127	—	—
423010—SD	—	—	—	40.50 x 28.37	1029 x 721	—	—	3PT	—	—	21.00	533
363610—SD	363610—SDLG	—	—	34.50 x 34.37	876 x 873	—	—	2	5.00	127	—	—
423610—SD	423610—SDLG	—	—	40.50 x 34.37	1029 x 873	—	—	3PT	—	—	21.00	533
482410—SD	482410—SDLG	—	—	46.50 x 22.37	1181 x 568	—	—	3PT	—	—	24.00	609
483010—SD	—	—	—	46.50 x 28.37	1181 x 721	—	—	3PT	—	—	24.00	609
483610—SD	483610—SDLG	—	—	46.50 x 34.37	1181 x 873	—	—	3PT	—	—	24.00	609
603610—SD	603610—SDLG	—	—	58.50 x 34.37	1486 x 873	—	—	3PT	—	—	30.00	762
202012—SD	202012—SDLG	202012—SDW	202012—SDWLG	18.50 x 18.37	470 x 467	16.25 x 15.00	413 x 381	1	—	—	10.00	254
242012—SD	242012—SDLG	242012—SDW	242012—SDWLG	22.50 x 18.37	572 x 467	20.25 x 15.00	514 x 381	1	—	—	12.00	305
242412—SD	242412—SDLG	242412—SDW	242412—SDWLG	22.50 x 22.37	572 x 568	20.25 x 17.62	514 x 448	2	5.00	127	—	—

Notes: Dimensions are in inches. Millimeters shown are for reference only. Data subject to change without notice.

Wall-Mount Enclosures
Type 4 Premier™ Series with Quarter-Turn Latches
Catalog Number

Enclosure Catalog Number				Enclosure Size			Panel	Panel Size	
Solid Door		Window Door		A x B x C		Door/Body Gauge	Catalog Number	H x W	
ANSI 61 Gray	RAL7035 Lt. Gray	ANSI 61 Gray	RAL7035 Lt. Gray	in.	mm			in.	mm
302412-SD	**302412-SDLG**	**302412-SDW**	**302412-SDWLG**	30 x 24 x 12	762 x 610 x 305	14/16	**3024P**	28.00 x 22.00	711 x 559
303012-SD	**303012-SDLG**	—	—	30 x 30 x 12	762 x 762 x 305	14/14	**3030P**	28.00 x 28.00	711 x 711
362412-SD	**362412-SDLG**	—	—	36 x 24 x 12	914 x 610 x 305	14/14	**3624P**	34.00 x 22.00	864 x 559
363012-SD	**363012-SDLG**	—	—	36 x 30 x 12	914 x 762 x 305	14/14	**3630P**	34.00 x 28.00	864 x 711
423012-SD	**423012-SDLG**	—	—	42 x 30 x 12	1067 x 762 x 305	14/14	**4230P**	40.00 x 28.00	1016 x 711
363612-SD	**363612-SDLG**	—	—	36 x 36 x 12	914 x 914 x 305	14/14	**3636P**	34.00 x 34.00	864 x 864
423612-SD	**423612-SDLG**	—	—	42 x 36 x 12	1067 x 914 x 305	14/14	**4236P**	40.00 x 34.00	1016 x 864
482412-SD	**482412-SDLG**	—	—	48 x 24 x 12	1219 x 610 x 305	14/14	**4824P**	46.00 x 22.00	1168 x 559
483612-SD	**483612-SDLG**	—	—	48 x 36 x 12	1219 x 914 x 305	14/14	**4836P**	46.00 x 34.00	1168 x 864
603612-SD	**603612-SDLG**	—	—	60 x 36 x 12	1524 x 914 x 305	14/14	**6036P**	58.00 x 34.00	1473 x 864
242016-SD	—	—	—	24 x 20 x 16	610 x 508 x 406	14/14	**2420P**	22.00 x 18.00	559 x 457
242416-SD	**242416-SDLG**	**242416-SDW**	**242416-SDWLG**	24 x 24 x 16	610 x 610 x 406	14/14	**2424P**	22.00 x 22.00	559 x 559
302416-SD	—	—	—	30 x 24 x 16	762 x 610 x 406	14/14	**3024P**	28.00 x 22.00	711 x 559
362416-SD	—	—	—	36 x 24 x 16	914 x 610 x 406	14/14	**3624P**	34.00 x 22.00	864 x 559
363016-SD	**363016-SDLG**	—	—	36 x 30 x 16	914 x 762 x 406	14/14	**3630P**	34.00 x 28.00	864 x 711
423616-SD	—	—	—	42 x 36 x 16	1067 x 914 x 406	14/14	**4236P**	40.00 x 34.00	1016 x 864
483616-SD	**483616-SDLG**	—	—	48 x 36 x 16	1219 x 914 x 406	14/14	**4836P**	46.00 x 34.00	1168 x 864
603616-SD	—	—	—	60 x 36 x 16	1524 x 914 x 406	14/14	**6036P**	58.00 x 34.00	1473 x 864
242420-SD	**242420-SDLG**	**242420-SDW**	**242420-SDWLG**	24 x 24 x 20	610 x 610 x 508	14/14	**2424P**	22.00 x 22.00	559 x 559
302420-SD	**302420-SDLG**	**302420-SDW**	**302420-SDWLG**	30 x 24 x 20	762 x 610 x 508	14/14	**3024P**	28.00 x 22.00	711 x 559
363020-SD	**363020-SDLG**	—	—	36 x 30 x 20	914 x 762 x 508	14/14	**3630P**	34.00 x 28.00	864 x 711
483620-SD	—	—	—	48 x 36 x 20	1219 x 914 x 508	14/14	**4836P**	46.00 x 34.00	1168 x 864
603620-SD	—	—	—	60 x 36 x 20	1524 x 914 x 508	14/14	**6036P**	58.00 x 34.00	1473 x 864

Illustration Without Window

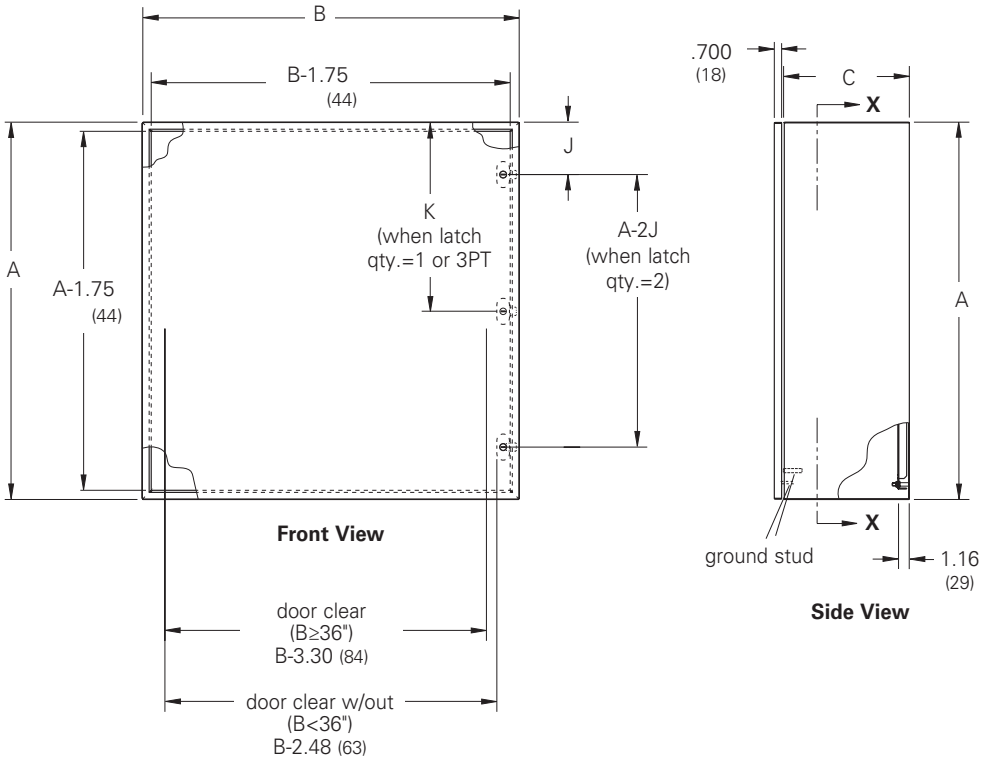

Notes: Dimensions are in inches. Millimeters shown are for reference only. Data subject to change without notice.

Wall-Mount Enclosures
Type 4 Premier™ Series with Quarter-Turn Latches
Catalog Number cont. from page 148

Enclosure Catalog Number				Mounting		Window Size					Latch	
Solid Door		Window Door		D x E		F x G		Quantity	J		K	
ANSI 61 Gray	RAL7035 Lt. Gray	ANSI 61 Gray	RAL7035 Lt. Gray	in.	mm	in.	mm		in.	mm		
302412-SD	302412-SDLG	302412-SDW	302412-SDWLG	28.50 x 22.37	724 x 568	26.25 x 17.62	667 x 448	2	5.00	127	—	—
303012-SD	303012-SDLG	—	—	28.50 x 28.37	724 x 721	—	—	2	5.00	127	—	—
362412-SD	362412-SDLG	—	—	34.50 x 22.37	876 x 568	—	—	2	5.00	127	—	—
363012-SD	363012-SDLG	—	—	34.50 x 28.37	876 x 721	—	—	2	5.00	127	—	—
423012-SD	423012-SDLG	—	—	40.50 x 28.37	1029 x 721	—	—	3PT	—	—	21.00	533
363612-SD	363612-SDLG	—	—	34.50 x 34.37	876 x 873	—	—	2	5.00	127	—	—
423612-SD	423612-SDLG	—	—	40.50 x 34.37	1029 x 873	—	—	3PT	—	—	21.00	533
482412-SD	482412-SDLG	—	—	46.50 x 22.37	1181 x 568	—	—	3PT	—	—	24.00	609
483612-SD	483612-SDLG	—	—	46.50 x 34.37	1181 x 873	—	—	3PT	—	—	24.00	609
603612-SD	603612-SDLG	—	—	58.50 x 34.37	1486 x 873	—	—	3PT	—	—	30.00	762
242016-SD	—	—	—	22.50 x 18.37	572 x 467	—	—	2	5.00	127	—	—
242416-SD	242416-SDLG	242416-SDW	242416-SDWLG	22.50 x 22.37	572 x 568	20.25 x 17.62	514 x 448	2	5.00	127	—	—
302416-SD	—	—	—	28.50 x 22.37	725 x 568	—	—	2	5.00	127	—	—
362416-SD	—	—	—	34.50 x 22.37	876 x 568	—	—	2	5.00	127	—	—
363016-SD	363016-SDLG	—	—	34.50 x 28.37	876 x 721	—	—	2	5.00	127	—	—
423616-SD	—	—	—	40.50 x 34.37	1029 x 873	—	—	3PT	—	—	21.00	533
483616-SD	483616-SDLG	—	—	46.50 x 34.37	1181 x 873	—	—	3PT	—	—	24.00	609
603616-SD	—	—	—	58.50 x 34.37	1486 x 873	—	—	3PT	—	—	30.00	762
242420-SD	242420-SDLG	242420-SDW	242420-SDWLG	22.50 x 22.37	572 x 568	20.25 x 17.62	514 x 448	2	5.00	127	—	—
302420-SD	302420-SDLG	302420-SDW	302420-SDWLG	28.50 x 22.37	724 x 568	26.25 x 17.62	667 x 448	2	5.00	127	—	—
363020-SD	363020-SDLG	—	—	34.50 x 28.37	876 x 721	—	—	2	5.00	127	—	—
483620-SD	—	—	—	46.50 x 34.37	1181 x 873	—	—	3PT	—	—	24.00	609
603620-SD	—	—	—	58.50 x 34.37	1486 x 873	—	—	3PT	—	—	30.00	762

Illustration With Window

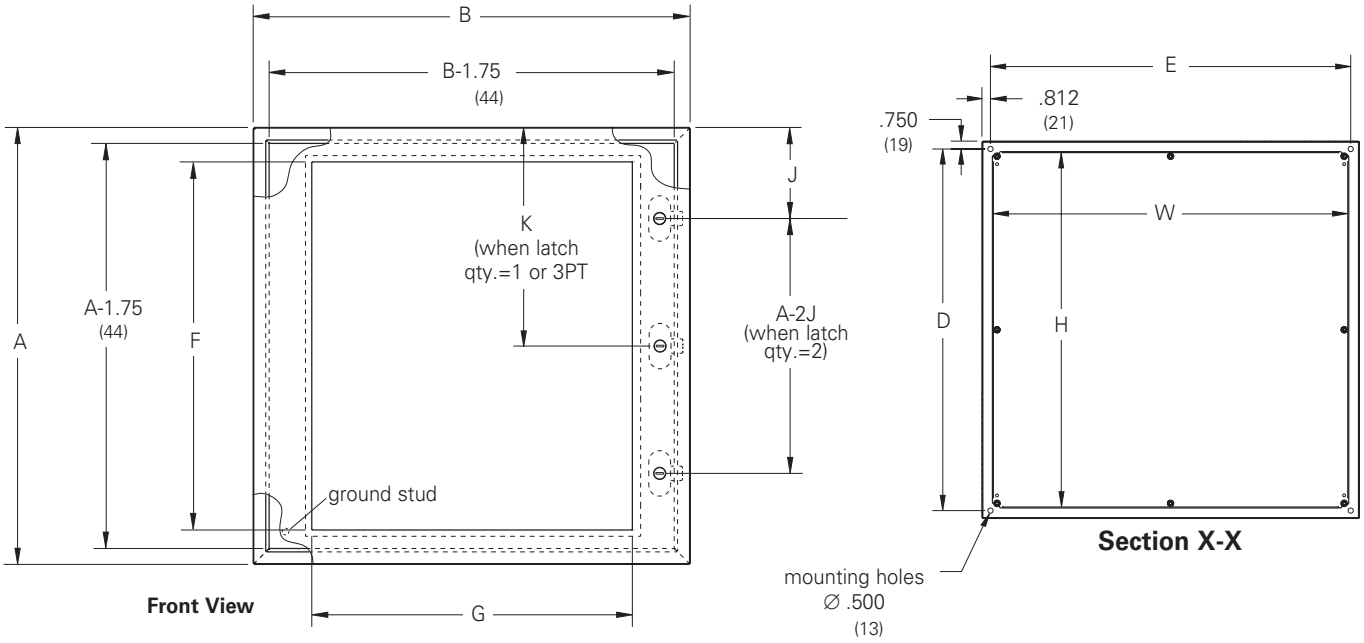

Notes: Dimensions are in inches. Millimeters shown are for reference only. Data subject to change without notice.

Wall-Mount Enclosures
Type 4 Premier™ Series Flush-Mount with Quarter-Turn Latches
Data Sheet

Application
- Houses electrical controls and instruments
- Intended for indoor or outdoor use
- Protects against circulating and windblown dust, falling dirt, dripping non-corrosive liquids, rain, splashing water and hose directed water

Standards
- UL 508A Listed, Type 4 and Type 12
- cUL Listed, Type 4 and Type 12
- Conforms to NEMA standard for Type 4 and Type 12

Finish
- Wash and phosphate undercoat
- ANSI 61 gray polyester powder finish

Accessories
- Premier panels
- Security latch inserts
- NEMA panel adapters
- Mounting foot kits
- Depth adjustment brackets
- EIA/TIA rack mounting angles
- Print pockets
- Swing-out panels
- Padlockable or keyed handles
- See Accessories section, pages 154-159

Construction
- Enclosure and door are fabricated from code gauge steel (see page 151)
- All continuous welded seams are finished smooth
- Hardware kit provided contains grounding hardware, .312-18 flanged hex nuts for panel mounting, and sealing washers for body mounting holes

Body Construction
- Body flange trough design is formed around body opening to divert liquid contaminants away from door opening
- Reduced width flange design increases enclosure opening
- Ground stud provided on enclosure body and on door
- .312-18 collar studs are provided for mounting optional Premier panels
- Enclosure mounting holes in body provided for direct mounting or optional mounting feet

Door Construction
- Doors are secured to the body with a concealed hinge design on one side and slotted quarter-turn flush latch(es) on the opposite side
- Flush cover for recessed wall-mounting
- Doors are easily removed and interchangeable
- Door has a seamless poured in-place gasket
- Door opens 90° for easy access

Discount Schedule: C2

Subclass: TC0

Notes: We can provide special sizes, finishes and other modifications. Consult the factory for your special requirements.

Wall-Mount Enclosures
Type 4 Premier™ Series Flush-Mount with Quarter-Turn Latches
Illustration Sheet and Catalog Number

Enclosure Catalog Number Solid Door	Enclosure Size A x B x C in.	mm	Panel Door/Body Gauge	Panel Size Catalog Number	Mounting H x W in.	mm	D x E in.	mm	Latch Qty.	J in.	mm
12126-FM	12x12x6	305x305x152	16/16	**1212P**	10.00x10.00	254x254	11.62x11.62	295x295	1	6.00	152
16126-FM	16x12x6	406x305x152	16/16	**1612P**	14.00x10.00	356x254	15.62x11.62	397x295	1	8.00	203
20166-FM	20x16x6	508x406x152	16/16	**2016P**	18.00x14.00	457x356	19.62x15.62	498x397	1	10.00	254
20206-FM	20x20x6	508x508x152	16/16	**2020P**	18.00x18.00	457x457	19.62x19.62	498x498	1	10.00	254
24208-FM	24x20x8	610x508x152	16/16	**2420P**	22.00x18.00	559x457	23.62x19.62	600x498	1	5.00	127
24248-FM	24x24x8	610x610x152	14/16	**2424P**	22.00x22.00	559x559	23.62x23.62	600x600	2	5.00	127
30248-FM	30x24x8	762x610x152	14/16	**3024P**	28.00x22.00	711x559	29.62x23.62	752x600	2	5.00	127

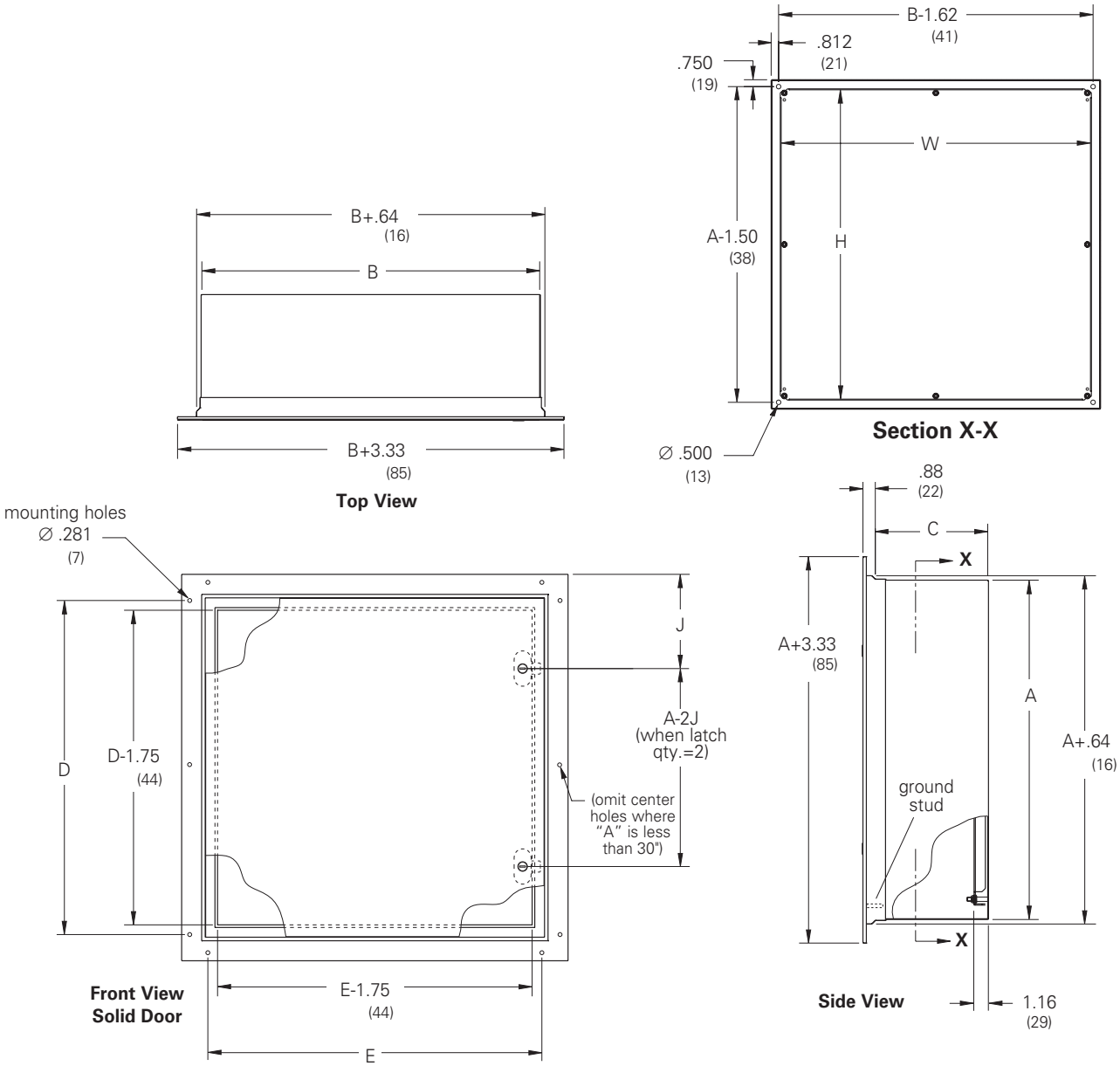

Notes: Dimensions are in inches. Millimeters shown are for reference only. Data subject to change without notice.

Wall-Mount Enclosures
Type 12 Premier™ Series Double-Door with Quarter-Turn Latches
Data Sheet

Application
- Houses electrical controls and instruments
- Protects against circulating and windblown dust, falling dirt and dripping non-corrosive liquids

Standards
- UL 508A Listed, Type 12
- cUL Listed, Type 12
- Conforms to NEMA standard for Type 12
- Wall-mounting bracket required to maintain UL/CSA external mounting requirements

Finish
- Wash and phosphate undercoat
- ANSI 61 gray polyester powder finish

Accessories
- Premier panels
- NEMA panel adapters
- Depth adjustment brackets
- Print pockets
- Single point padlockable or keyed handles
- 3-point (3PT) handle: SD-KHB
- Security latch inserts
- Mounting foot kits
- See Accessories section, pages 154-159

Construction
- Enclosure and door are fabricated from code gauge steel (see page 153)
- All continuous welded seams are finished smooth
- Hardware kit provided contains grounding hardware, .312-18 flanged hex nuts for panel mounting, and sealing washers for body mounting holes

Body Construction
- Body flange trough design is formed around body opening to divert liquid contaminants away from door opening
- Reduced width flange design increases enclosure opening
- Ground stud provided on enclosure body and on door
- .312-18 collar studs are provided for mounting optional Premier panels
- Enclosure mounting holes in body provided for direct mounting or optional mounting feet

Door Construction
- Doors are secured to the body with a concealed hinge design on one side and a slotted quarter-turn 3-point latching system which closes the left side door over the right
- Doors are easily removed and interchangeable
- Door opens 180° for easy access
- Doors have a fixed, oil-resistant gasket

Discount Schedule: C2

Subclass: TC0

Notes: We can provide special sizes, finishes and other modifications. Consult the factory for your special requirements.

Wall-Mount Enclosures
Type 12 Premier™ Series Double-Door with Quarter-Turn Latches
Illustration Sheet and Catalog Number

Enclosure Catalog Number Solid Door	Enclosure Size A x B x C in.	mm	Door/Body Gauge	Panel Catalog Number	Panel Size H x W in.	mm	Mounting D x E in.	mm	Latch Qty.
24428-TD	24x42x8	610x1067x203	14/14	**2442P**	22.00x40.00	559x1016	22.50x40.37	572x1026	3PT
30488-TD	30x48x8	762x1219x203	14/14	**3048P**	28.00x46.00	711x1168	28.50x46.37	724x1178	3PT
306012-TD	30x60x12	762x1524x305	14/14	**3060P**	28.00x58.00	711x1473	28.50x58.37	724x1483	3PT
364812-TD	36x48x12	914x1219x305	14/14	**4836P**	34.00x46.00	864x1168	34.50x46.37	876x1178	3PT
366012-TD	36x60x12	914x1524x305	14/14	**6036P**	34.00x58.00	864x1473	34.50x58.37	876x1483	3PT

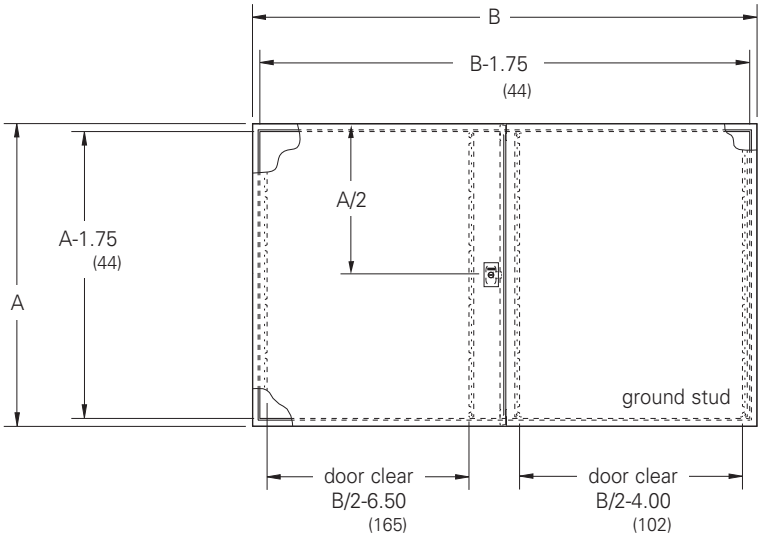

Front View

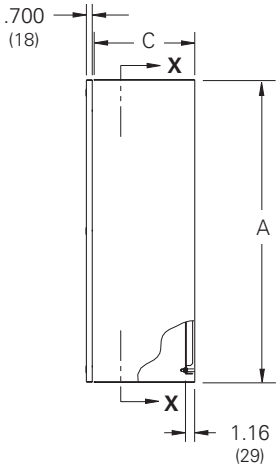

Side View

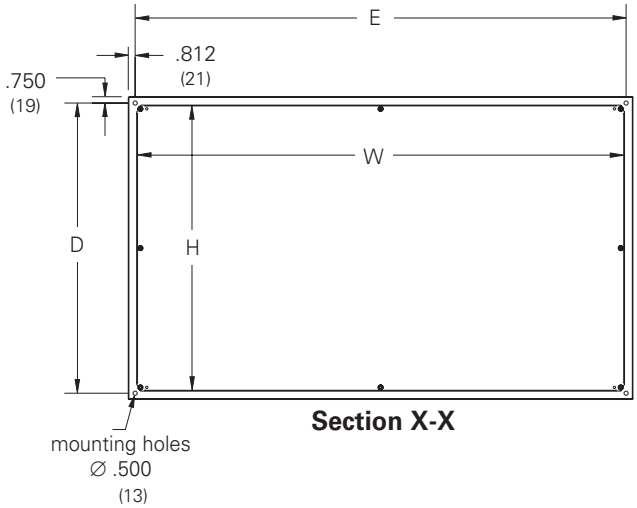

Section X-X

Notes: Dimensions are in inches. Millimeters shown are for reference only. Data subject to change without notice.

Premier™ Series Accessories

Discount Schedule: C2

Panels **Subclass: TDP**

Premier panels can be installed in any Premier Series enclosure and are up to 20% larger than standard NEMA panels. Panels above 24" are flanged.
Steel panels have a white polyester powder paint finish.
Stainless Steel and conductive galvanized sizes are available as shown in chart.

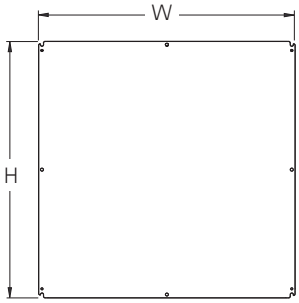

Catalog Number			Panel Size H x W		
Conductive	Steel	Stainless	in.	mm	Gauge
108GP	108P	108PSS4	8.00 x 6.00	203 x 152	14
1210GP	1210P	1210PSS4	10.00 x 8.00	254 x 203	14
1212GP	1212P	1212PSS4	10.00 x 10.00	254 x 254	14
1612GP	1612P	1612PSS4	14.00 x 10.00	356 x 254	14
1616GP	1616P	1616PSS4	14.00 x 14.00	356 x 356	12
2016GP	2016P	2016PSS4	18.00 x 14.00	457 x 356	12
2020GP	2020P	2020PSS4	18.00 x 18.00	457 x 457	12
2416GP	2416P	2416PSS4	22.00 x 14.00	559 x 356	12
2420GP	2420P	2420PSS4	22.00 x 18.00	559 x 457	12
2424GP	2424P	2424PSS4	22.00 x 22.00	559 x 559	12
2442GP	2442P	2442PSS4	22.00 x 40.00	559 x 1016	12
3020GP	3020P	3020PSS4	28.00 x 18.00	711 x 457	12
3024GP	3024P	3024PSS4	28.00 x 22.00	711 x 559	12
3030GP	3030P	3030PSS4	28.00 x 28.00	711 x 711	12
3048GP	3048P	3048PSS4	28.00 x 46.00	711 x 1168	12
3060GP	3060P	3060PSS4	28.00 x 58.00	711 x 1473	12
3624GP	3624P	3624PSS4	34.00 x 22.00	864 x 559	12
3630GP	3630P	3630PSS4	34.00 x 28.00	864 x 711	12
3636GP	3636P	3636PSS4	34.00 x 34.00	864 x 864	12
4230GP	4230P	4230PSS4	40.00 x 28.00	1016 x 711	12
4236GP	4236P	4236PSS4	40.00 x 34.00	1016 x 864	12
4824GP	4824P	4824PSS4	46.00 x 22.00	1168 x 559	12
4836GP	4836P	4836PSS4	46.00 x 34.00	1168 x 864	12
6036GP	6036P	6036PSS4	58.00 x 34.00	1473 x 864	12

NEMA Panel Adapters **Subclass: TD0**

NEMA panel adapters allow standard NEMA panels to be used in Premier series enclosures. Decreased height and width of NEMA panels increase space around panel for wire management.Kit includes four adapters and four .375-16 flanged hex nuts.

Finish: Zinc Plated

(**Note**: Cannot be used with enclosures 12" x 12" (305 mm x 305 mm) or smaller.)

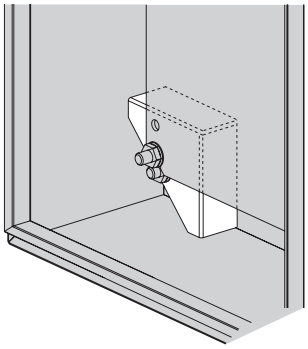

Catalog Number	Qty.	For use with Premier Enclosures
PCK4	4	30" x 30" or smaller

Mounting Foot Kits **Subclass: TD0**

Mounting foot kits are available in stainless steel. Four feet and hardware are included.

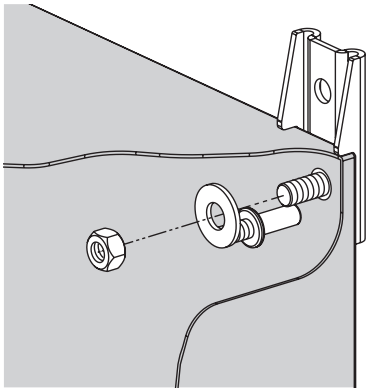

Catalog Number	Qty.	Description
WMK	4	Zinc Plated Steel

Notes: Dimensions are in inches. Millimeters shown are for reference only. Data subject to change without notice.

Premier™ Series Accessories

Discount Schedule: C2

Subclass: TD0

Swing-Out Panels

Swing-out panels offer a means for mounting user components and equipment near the front of an enclosure opening. Panel pivots from front of enclosure to allow easy access to internal equipment. Swing-out panels are 14 gauge with a white polyester powder finish and includes all hardware for mounting to front flange of enclosure.
(**Note**: Cannot be used in conjunction with depth adjustment brackets).

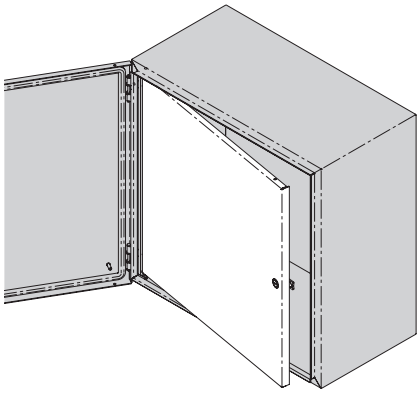

Note: Swing-out panel distance from panel face to inside of enclosure cover equals 1¼".

Catalog Number	Panel Size Height x Width in.	mm	For use with Premier Enclosures A x B
1212SP	9.78 x 9.84	248 x 250	12"x12"
1612SP	13.78 x 9.84	350 x 250	16"x12"
1616SP	13.78 x 13.84	350 x 352	16"x16"
1620SP	13.78 x 17.84	350 x 453	16"x20"
2016SP	17.78 x 13.84	452 x 352	20"x16"
2020SP	17.78 x 17.84	452 x 453	20"x20"
2024SP	17.78 x 21.84	452 x 555	20"x24"
2416SP	21.78 x 13.84	553 x 352	24"x16"
2420SP	21.78 x 17.84	553 x 453	24"x20"
2424SP	21.78 x 21.84	553 x 555	24"x24"
3020SP	27.78 x 17.84	706 x 453	30"x20"
3024SP	27.78 x 21.84	706 x 555	30"x24"
3030SP	27.78 x 27.84	706 x 707	30"x30"
3624SP	33.78 x 21.84	858 x 555	36"x24"
3630SP	33.78 x 27.84	858 x 707	36"x30"
3636SP	33.78 x 33.84	858 x 860	36"x36"

Dead Front Panels

Dead front kits offer a means for mounting user components and equipment near the front of an enclosure opening. Also, creates a barrier and controls access to the enclosure interior. Kit includes ANSI 61 gray panel and all hardware for mounting to enclosures.
(**Note**: Cannot be used in conjunction with depth adjustment brackets).

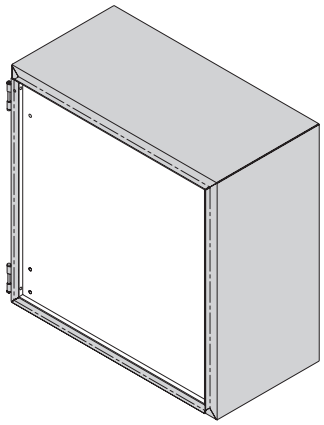

Catalog Number	For use with Premier Enclosures A x B
1212DF	12"x12"
1612DF	16"x12"
2016DF	20"x16"
2020DF	20"x20"
2420DF	24"x20"
2424DF	24"x24"
3024DF	30"x24"

Note: Dead front panel distance from panel face to inside of enclosure cover equals 1¼".

Mounting Channels

Mounting channels create a vertical or horizontal framework for DIN rail, flexible mounting straps, or other component attachment. Two channels provided for mounting on enclosure collar studs. Finish: Zinc Plated

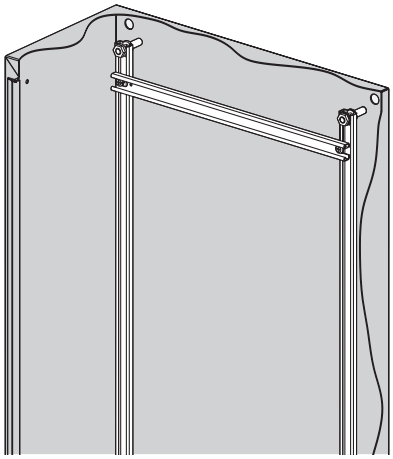

Catalog Number	Qty.	For use with Premier Enclosures
12MC	2	12" height or width
16MC	2	16" height or width
20MC	2	20" height or width
24MC	2	24" height or width
30MC	2	30" height or width
36MC	2	36" height or width
42MC	2	42" height or width
48MC	2	48" height or width
60MC	2	60" height or width

Notes: Dimensions are in inches. Millimeters shown are for reference only. Data subject to change without notice.

Premier™ Series Accessories

Discount Schedule: C2

Subclass: TD0

DIN Rail Kits

DIN rail kits provide flexibility for mounting DIN type snap-on equipment. Three styles; TS32x15, slotted; TS35x7.5, slotted; TS35x15, slotted all attach to collar studs either horizontally or vertically. Three DIN rails, screws and channel nuts are provided.

Finish: Yellow Zinc

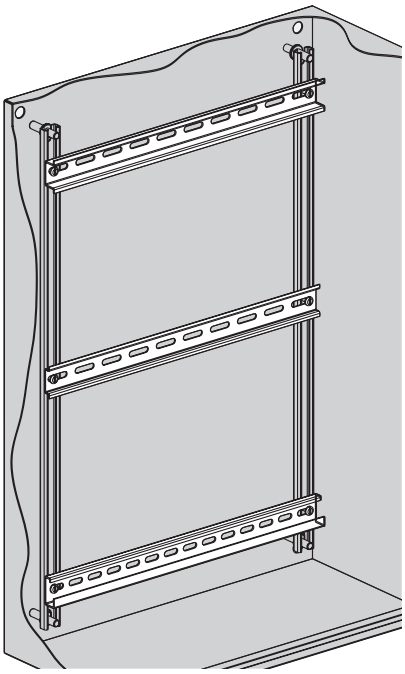

Catalog Number	Description	For use with Premier Enclosures
12DR1P	TS32 x 15, slotted	12" height or width
16DR1P	TS32 x 15, slotted	16" height or width
20DR1P	TS32 x 15, slotted	20" height or width
24DR1P	TS32 x 15, slotted	24" height or width
12DR3P	TS35 x 7.5, slotted	12" height or width
16DR3P	TS35 x 7.5, slotted	16" height or width
20DR3P	TS35 x 7.5, slotted	20" height or width
24DR3P	TS35 x 7.5, slotted	24" height or width
12DRCP	TS35 x 15, slotted	12" height or width
16DRCP	TS35 x 15, slotted	16" height or width
20DRCP	TS35 x 15, slotted	20" height or width
24DRCP	TS35 x 15, slotted	24" height or width

Flexible Mounting Straps

Flexible mounting straps offer a versatile, horizontal or vertical mounting method inside enclosure body. Two designs; 1-hole or 3-hole pattern increase mounting flexibility and attach to enclosure collar studs. Flexible mounting strap kit contains two straps and hardware. Finish: Zinc Plated

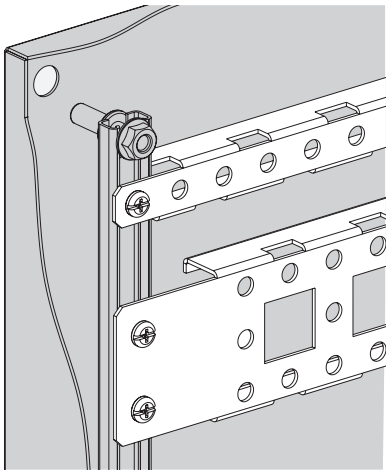

Catalog Number	Description	Fits Premier Premier Enclosures
12GS1	1 hole	12" height or width
16GS1	1 hole	16" height or width
20GS1	1 hole	20" height or width
24GS1	1 hole	24" height or width
30GS1	1 hole	30" height or width
36GS3	3 hole	36" height or width
42GS3	3 hole	42" height or width
48GS3	3 hole	48" height or width
60GS3	3 hole	60" height or width

Notes: Dimensions are in inches. Millimeters shown are for reference only. Data subject to change without notice.

Premier™ Series Accessories

Discount Schedule: C2

Subclass: TD0

Rack Mounting Angles

Relay rack angles are designed for mounting EIA 19" rack mount equipment inside 24" wide enclosures. Fabricated from 14 gauge steel and zinc plated. Rack angles are mounted to enclosure flange with hardware provided. Rack mount angles are untapped and require screws and cage nuts for equipment mounting (order separately).
Finish: Zinc Plated

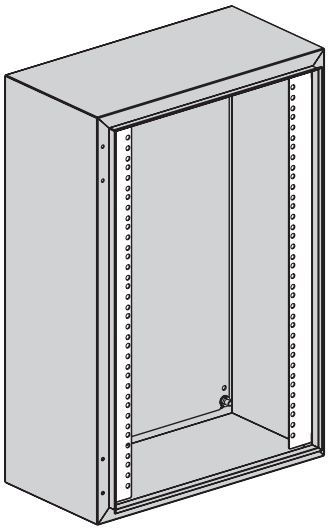

Catalog Number	For use with Premier Enclosures	Mounting Units
10URMA	20" height	10
12URMA	24" height	12
16URMA	30" height	16
19URMA	36" height	19
26URMA	48" height	26

Universal Spacing [5/8" (16mm), 5/8" (16mm), 1/2" (13mm)]

Swing-Out Rack Frames

Swing-out rack frames allow mounting of EIA 19" rack mount equipment. Flexible pivoting framework provides access to back of equipment or other internal components. Designed for use with 24" wide Premier series enclosures. Mounting hardware included. Swing-out rack frame holes are untapped and require screws and cage nuts for equipment mounting (order separately).
(**Note**: Cannot be used in conjunction with depth adjustment brackets).
Finish: ANSI Gray Polyester Powder

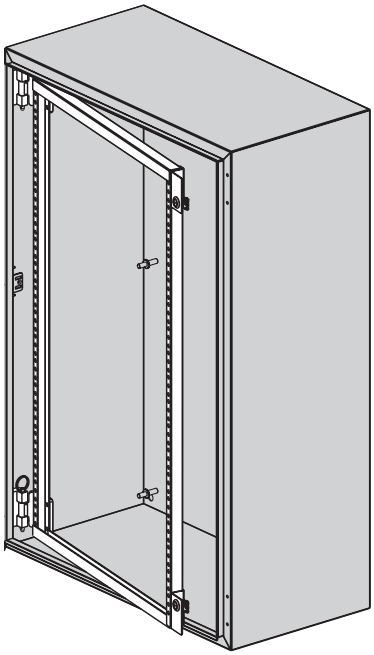

Catalog Number	For use with Premier Enclosures	Mounting Units
2424SF	24" x 24"	11
3024SF	30" x 24"	15
3624SF	36" x 24"	18

Universal Spacing [5/8" (16mm), 5/8" (16mm), 1/2" (13mm)]

Notes: Dimensions are in inches. Millimeters shown are for reference only. Data subject to change without notice.

Premier™ Series Accessories

Discount Schedule: C2

Subclass: TD0

Handles

Padlocking, key-locking or non-locking handles are interchangeable with standard slotted quarter-turn flush latch on Premier series enclosures. Available keyed alike or keyed different, please specify when ordering.

WMHNL

WMHK-01 thru WMHK-04

WMHPTO

SD-KHB

Catalog Number	Description	Latch Type
WMHNL	Wall-mount handle, non-locking	Single point
WMHK-01	Wall-mount handle, key-locking - keyed 01	Single point
WMHK-02	Wall-mount handle, key-locking - keyed 02	Single point
WMHK-03	Wall-mount handle, key-locking - keyed 03	Single point
WMHK-04	Wall-mount handle, key-locking - keyed 04	Single point
WMHPTO	Wall-mount handle, padlockable	Single point
SD-KHB	Black die cast zinc, key-locking handle	3-point

Security Latch Inserts

Security latch inserts interchange with slotted quarter-turn flush latch and provide security and control access to interior of enclosure. Inserts include matching key.

7MTLK

Catalog Number	Description	Latch Type
7MTLK	7mm triangular latch insert	Single point
7MSLK	7mm square latch insert	Single point
3MDBLK	3mm double bit latch insert	Single point

7MSLK

3MDBLK

Print Pockets

Print pockets provide a convenient place to store operation manuals, diagrams, or other documents inside the enclosure. Thermoplastic pockets are gray and have cut away areas for viewing contents. Pockets have adhesive backing for mounting inside on enclosure door.

Catalog Number	Length x Width
32170	6" x 6"
32171	10" x 10"

Notes: Dimensions are in inches. Millimeters shown are for reference only. Data subject to change without notice.

Premier™ Series Accessories

Discount Schedule: C2

Subclass: TD0

Depth Adjustment Brackets

Depth adjustment brackets allow variable depth mounting of premier accessories. Designed for use with 6", 8" or 12" deep enclosures. Kit is available in quantities of 4 or 2 and includes mounting channel, adjustable mechanism and hardware. When enclosure has 6 collar studs, use two kits. (**Note**: Not for use with swing-out rack frame, dead front panel or swing-out panel). Finish: Zinc Plated

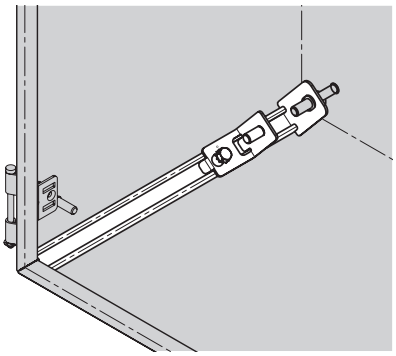

Catalog Number	Qty.	For use with Premier Enclosures
64AMK	4	6" depth or greater
84AMK	4	8" depth or greater
82AMK	2	8" depth or greater
124AMK	4	12" depth or greater
122AMK	2	12" depth or greater

Pole Mounting Kits

Pole mounting kits allow installation of enclosure on round or rectangular poles. Kit includes hot dip galvanized after fabrication strut channel, stainless steel band and hardware for top and bottom mounting of enclosure.

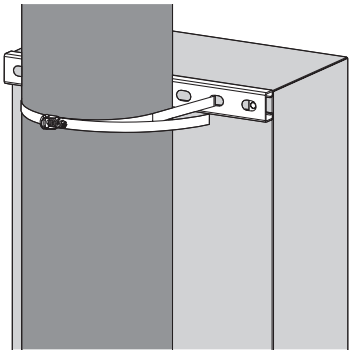

Note: Pole diameter range 4" minimum to 12" maximum.

Catalog Number	For use with Premier Enclosures
12PMK	12" width
16PMK	16" width
20PMK	20" width
24PMK	24" width
30PMK	30" width

Hardware

Phillips head screws and cage nuts are available in #10-32, #12-24 or M6 and allow mounting of equipment to untapped holes in rack mounting angles and swing-out rack frame.

Catalog Number	Screw Type
E2-MA-1032-PHMS-100	#10-32 Phillips
E2-MA-1224-PHMS-100	#12-24 Phillips
E2-MA-M6-PHMS-100	M6 Phillips

Catalog Number	Cage Nut Type
E2-MA-CN-1032-100	#10-32 Tapped
E2-MA-CN-1224-100	#12-24 Tapped
E2-MA-CN-M6-100	M6 Tapped

Sold in bags of 100 pieces.

Notes: Dimensions are in inches. Millimeters shown are for reference only. Data subject to change without notice.

Wall-Mount Enclosures
Type 4 Single-Door with 3-Point Locking
Data Sheet and Catalog Number

Application
- Houses electrical controls and instruments
- Intended for indoor or outdoor use
- Protects against windblown dust and rain, splashing water and hose directed water

Standards
- UL 508A listed, Type 4, Type 12
- CSA C22.2 No.94 certified, Type 4, Type 12
- Conforms to NEMA standard for Type 3, Type 4, Type 12

Finish
- Wash and phosphate undercoat
- ANSI 61 gray polyester powder finish

Accessories
- Panels
- Swing-out panel kit
- NEMA terminal kit
- Window Kits
- Floor stand kit
- Replacement handle, T4PKHB, (see page 427)

Construction
- Enclosure and door are fabricated from code gauge steel, (see pages 160 & 161)
- All continuous welded seams are finished smooth
- Continuous hinge with stainless steel hinge pin
- Internal 3-point latching with a keylocking and padlock handle
- Door has a seamless poured in-place gasket
- Formed lip around enclosure opening diverts liquids and contaminants
- Ground stud provided on door and body
- Print pocket provided
- .375-16 colar studs are provided for mounting optional panel
- External mounting feet

Discount Schedule: C2

Subclass: DF3

Enclosure Catalog Number	Enclosure Size Height x Width x Depth A x B x C in.	mm	Gauge	Panel Catalog Number	Conductive Catalog Number	Panel Size Panel Height x Width in.	mm
24206-43PT	24 x 20 x 6	609 x 508 x 152	16	AW2420P	AW2420GP	20.87 x 16.87	530 x 429
24208-43PT	24 x 20 x 8	609 x 508 x 203	16	AW2420P	AW2420GP	20.87 x 16.87	530 x 429
24248-43PT	24 x 24 x 8	609 x 609 x 203	14	AW2424P	AW2424GP	20.87 x 20.87	530 x 530
30248-43PT	30 x 24 x 8	762 x 609 x 203	14	AW3024P	AW3024GP	26.87 x 20.87	682 x 530
30308-43PT	30 x 30 x 8	762 x 762 x 203	14	AW3030P	AW3030GP	26.87 x 26.87	682 x 682
36248-43PT	36 x 24 x 8	914 x 609 x 203	14	AW3624P	AW3624GP	32.87 x 20.87	835 x 530
36308-43PT	36 x 30 x 8	914 x 762 x 203	14	AW3630P	AW3630GP	32.87 x 26.87	835 x 682
48368-43PT	48 x 36 x 8	1219 x 914 x 203	14	AW4836P	AW4836GP	44.87 x 32.87	1139 x 835
242010-43PT	24 x 20 x 10	609 x 508 x 254	16	AW2420P	AW2420GP	20.87 x 16.87	530 x 429
363010-43PT	36 x 30 x 10	914 x 762 x 254	14	AW3630P	AW3630GP	32.87 x 26.87	835 x 682
483610-43PT	48 x 36 x 10	1219 x 914 x 254	14	AW4836P	AW4836GP	44.87 x 32.87	1139 x 835

Notes: We can provide special sizes, finishes and other modifications. Consult the factory for your special requirements.

Wall-Mount Enclosures
Type 4 Single-Door with 3-Point Locking
Illustration Sheet and Catalog Number

Enclosure Catalog Number	Enclosure Size Height x Width x Depth A x B x C in.	mm	Gauge	Panel Catalog Number	Conductive Catalog Number	Panel Size Panel Height x Width in.	mm
242412-43PT	24 x 24 x 12	609 x 609 x 305	14	AW2424P	AW2424GP	20.87 x 20.87	530 x 530
302412-43PT	30 x 24 x 12	762 x 609 x 305	14	AW3024P	AW3024GP	26.87 x 20.87	682 x 530
363012-43PT	36 x 30 x 12	914 x 762 x 305	14	AW3630P	AW3630GP	32.87 x 26.87	835 x 682
363612-43PT	36 x 36 x 12	914 x 914 x 305	14	AW3636P	AW3636GP	32.87 x 32.87	835 x 835
483612-43PT	48 x 36 x 12	1219 x 914 x 305	14	AW4836P	AW4836GP	44.87 x 32.87	1139 x 835
603612-43PT	60 x 36 x 12	1524 x 914 x 305	14	AW6036P	AW6036GP	56.87 x 32.87	1444 x 835
483616-43PT	48 x 36 x 16	1219 x 914 x 406	14	AW4836P	AW4836GP	44.87 x 32.87	1139 x 835
603616-43PT	60 x 36 x 16	1524 x 914 x 406	14	AW6036P	AW6036GP	56.87 x 32.87	1444 x 835

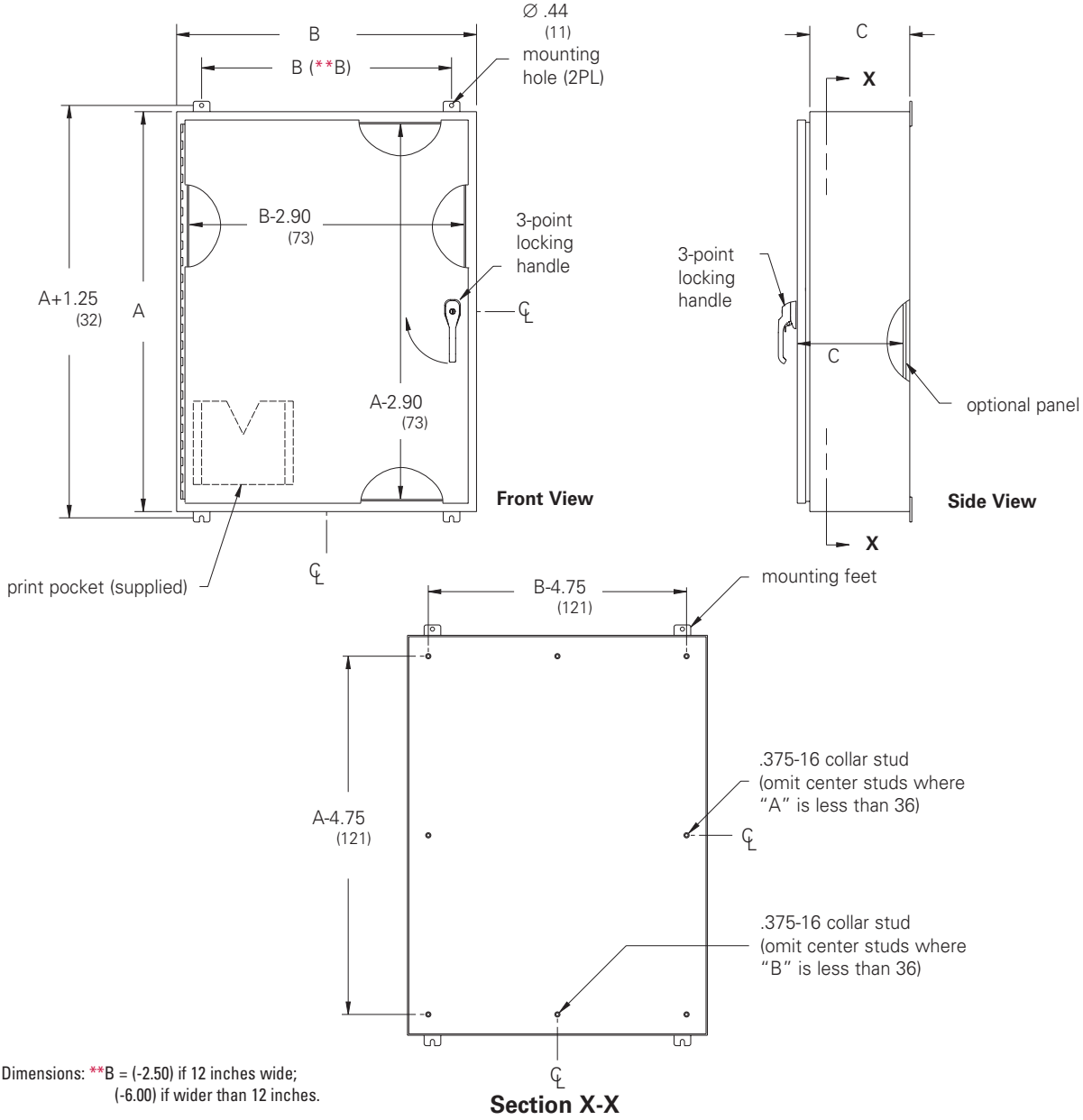

Note: Dimensions: **B = (-2.50) if 12 inches wide;
(-6.00) if wider than 12 inches.

Notes: Dimensions are in inches. Millimeters shown are for reference only. Data subject to change without notice.

Wall-Mount Enclosures
Type 4 Double-Door with 3-Point Locking
Data Sheet and Catalog Number

Accessories
- Panels
- Window Kits
- Floor stand kit
- Lights
- Replacement handle, T4PKHB, (see page 427)

Application
- Houses electrical controls and instruments
- Intended for indoor or outdoor use
- Protects against windblown dust and rain, splashing water and hose directed water

Standards
- UL 508A listed, Type 4, 12
- CSA C22.2 No.94 certified, Type 4, 12
- Conforms to NEMA standard for Type 3, 4, 12

Finish
- Wash and phosphate undercoat
- ANSI 61 gray polyester powder finish

Construction
- Enclosure and door are fabricated from (14) gauge steel
- All continuous welded seams are finished smooth
- Heavy-duty continuous hinges with stainless steel hinge pins
- Internal 3-point latching with keylocking and padlock handles
- Removable centerpost for easy panel installation
- Doors have a seamless poured in-place gasket
- Formed lip around enclosure opening diverts liquids and contaminants
- Ground stud provided on door and body
- Print pocket provided
- .375-16 colar studs are provided for mounting optional panel
- External mounting feet

Discount Schedule: C2

Subclass: DF3

Enclosure Catalog Number	Enclosure Size Height x Width x Depth A x B x C in.	mm	Panel Catalog Number	Conductive Panel Catalog Number	Panel Size Height x Width in.	mm
244210-4D3PT	24.00 x 42.00 x 10.00	609 x 1067 x 254	AW4224P	—	38.87 x 20.87	987 x 530
304210-4D3PT	30.00 x 42.00 x 10.00	762 x 1067 x 254	AW4230P	AW4230GP	38.87 x 26.87	987 x 682
304810-4D3PT	30.00 x 48.00 x 10.00	762 x 1219 x 254	AW4830P	AW4830GP	44.87 x 26.87	1139 x 682
306010-4D3PT	30.00 x 60.00 x 10.00	762 x 1524 x 254	AW6030P	—	56.87 x 26.87	1444 x 682
364812-4D3PT	36.00 x 48.00 x 12.00	914 x 1219 x 305	AW4836P	AW4836GP	44.87 x 32.87	1139 x 835
366012-4D3PT	36.00 x 60.00 x 12.00	762 x 1524 x 305	AW6036P	AW6036GP	56.87 x 32.87	1444 x 835

Notes: We can provide special sizes, finishes and other modifications. Consult the factory for your special requirements.

Wall-Mount Enclosures
Type 4 Double-Door with 3-Point Locking
Illustration Sheet

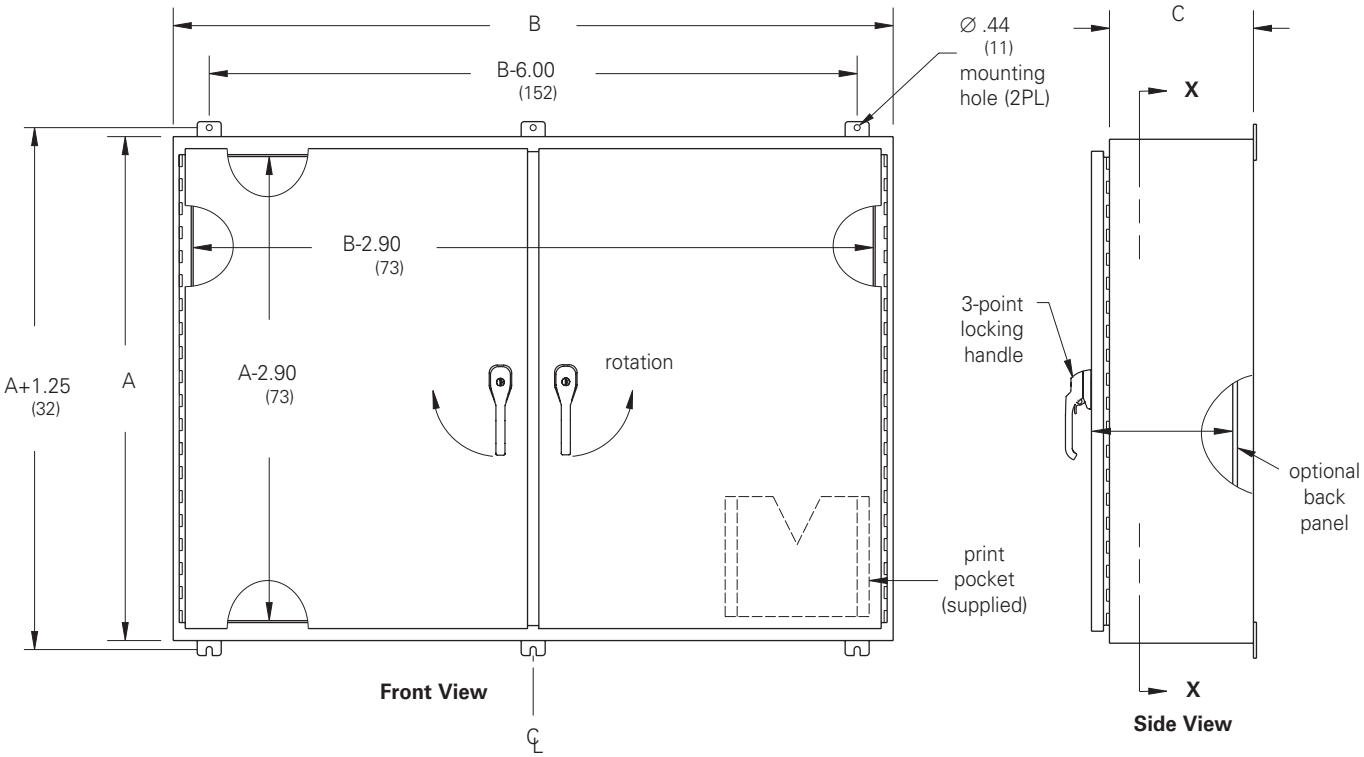

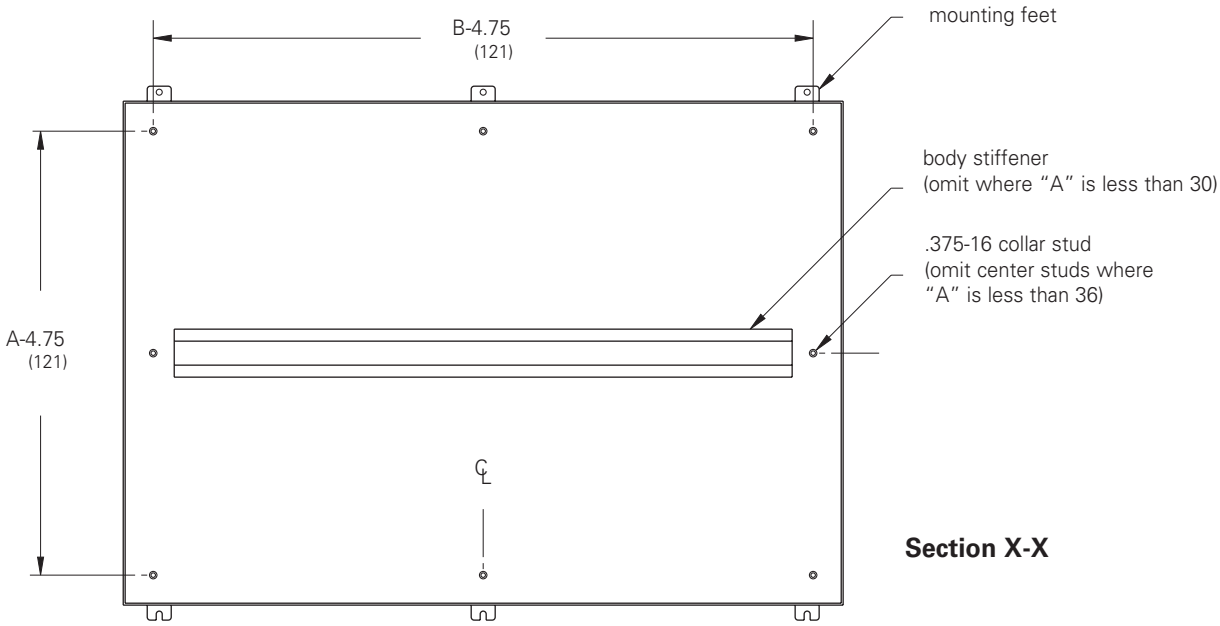

Notes: Dimensions are in inches. Millimeters shown are for reference only. Data subject to change without notice.

Ground-Mount Enclosures
Type 4 Double-Door Floor-Standing
Data Sheet and Catalog Number

Application
- Houses electrical controls and instruments
- Intended for indoor or outdoor use
- Protects against windblown dust and rain, splashing water and hose directed water

Standards
- UL 508A listed, Type 4 and Type 12
- CSA C22.2 No.94 certified, Type 4 and Type 12
- Conforms to NEMA standard for Type 4 and Type 12

Finish
- Wash and phosphate undercoat
- ANSI 61 gray polyester powder finish

Accessories
- Panels
- Leg stabilizer kit
- Touch-up paint
- See Accessories section

Construction
- Enclosure and door are fabricated from code gauge steel (see table)
- All continuous welded seams are finished smooth
- Doors are secured to the body with removable concealed hinges and easy to remove stainless steel door clamps on three (3) sides
- Modern bevel profile on hinge side of enclosure doors
- Print pocket provided
- Each door has a padlock hasp with sealing hole provision
- Doors have a seamless poured in-place gasket
- Ground stud provided on doors and body
- Removable center post for complete front access
- Heavy gauge angle supports and .375-16 collar studs are provided for mounting optional panel
- Large lifting eyebolts are supplied
- Mounting legs are provided for floor mounting

Discount Schedule: C2

Subclass: DI0

Enclosure Catalog Number	Enclosure Size Height x Width x Depth A x B x C in.	mm	Body/Door Gauge	Panel Catalog Number	Panel Size Height x Width in.	mm
624810-4FD	62.00 x 48.00 x 10.00	1575 x 1219 x 254	12/12	AW6048P	55.87 x 43.87	1419 x 1114
626012-4FD	62.00 x 60.00 x 12.00	1575 x 1524 x 305	12/12	AW6060P	55.87 x 55.87	1419 x 1419
746012-4FD	74.00 x 60.00 x 12.00	1880 x 1524 x 305	12/12	AW7260P	67.87 x 55.87	1724 x 1419
747212-4FD	74.00 x 72.00 x 12.00	1880 x 1829 x 305	12/10	AW7272P	67.87 x 67.87	1724 x 1724
747224-4FD	74.00 x 72.00 x 24.00	1880 x 1829 x 610	12/10	AW7272P	67.87 x 67.87	1724 x 1724

Notes: We can provide special sizes, finishes and other modifications. Consult the factory for your special requirements.

Ground-Mount Enclosures
Type 4 Double-Door Floor-Standing
Illustration Sheet

ID = Inside Dimension

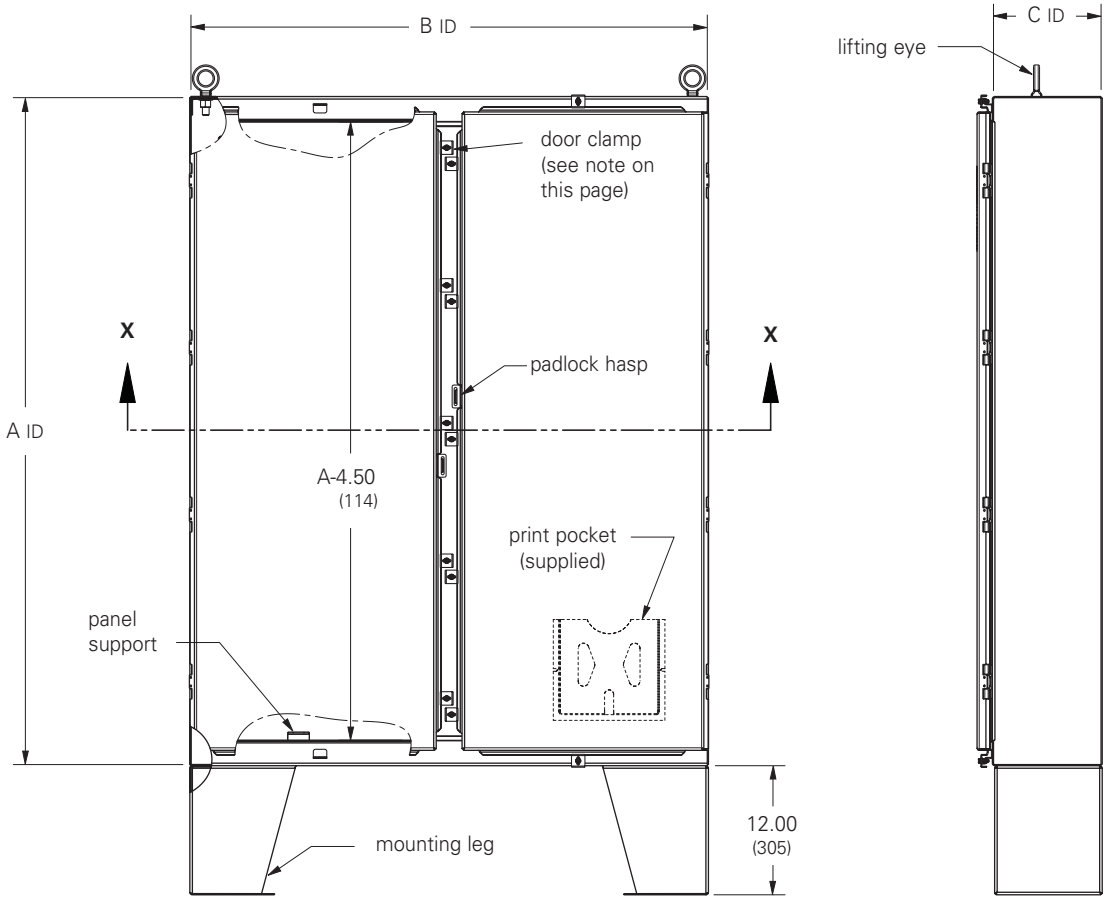

Front View **Side View**

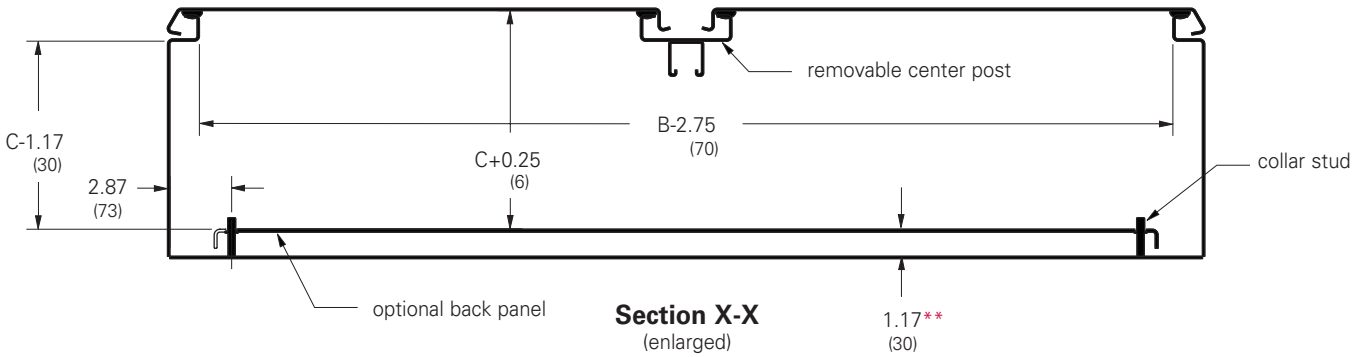

Section X-X
(enlarged)

** From top of panel stud flange to inside of enclosure

Notes: Clamps are mounted along three sides of the enclosure door. Spacing between clamps along side opposite the hinge does not exceed 15 inches. Four lifting eyes are furnished when C dimension is 24" (610 mm). Dimensions are in inches. Millimeters shown are for reference only. Data subject to change without notice.

Ground-Mount Enclosures
Type 4 Double-Door Floor-Standing with Quarter-Turn Latches
Data Sheet and Catalog Number

Application
- Houses electrical controls and instruments
- Intended for indoor or outdoor use
- Protects against windblown dust and rain, splashing water and hose directed water

Standards
- UL 508A listed, Type 4 and Type 12
- CSA C22.2 No.94 certified, Type 4 and Type 12
- Conforms to NEMA standard for Type 3, Type 4, Type 12

Finish
- Wash and phosphate undercoat
- ANSI 61 gray polyester powder finish

Accessories
- Panels
- Panel Support Kit
- Panel Lifting Kit
- Leg stabilizer kit
- Lights
- Window kits

Construction
- Enclosure body (12) gauge and doors (14) gauge are fabricated from steel
- All continuous welded seams are finished smooth
- Doors are secured to the body with removable concealed hinges and quarter-turn flush latches on three (3) sides
- Modern bevel profile on both sides of enclosure doors
- Doors have a seamless poured in-place gasket
- Removable centerpost for easy panel installation
- Formed lip around enclosure opening diverts liquids and contaminants
- Ground stud provided on doors and body
- Print pocket provided
- Heavy gauge angle supports and .375-16 colar studs are provided for mounting optional panel
- Large lifting eyebolts
- Mounting legs

Discount Schedule: C2

Subclass: DI2

Enclosure Catalog Number	Enclosure Size Height x Width x Depth A x B x C in.	mm	Panel Catalog Number	Panel Size Height x Width in.	mm
604812-4FDQT	60 x 48 x 12	1524 x 1219 x 305	AW6048P	55.87 x 43.87	1419 x 1114
606012-4FDQT	60 x 60 x 12	1524 x 1524 x 305	AW6060P	55.87 x 55.87	1419 x 1419
726012-4FDQT	72 x 60 x 12	1829 x 1524 x 305	AW7260P	67.87 x 55.87	1724 x 1419
727212-4FDQT	72 x 72 x 12	1829 x 1829 x 305	AW7272P	67.87 x 67.87	1724 x 1724
727224-4FDQT	72 x 72 x 24	1829 x 1829 x 609	AW7272P	67.87 x 67.87	1724 x 1724

Notes: We can provide special sizes, finishes and other modifications. Consult the factory for your special requirements.

Ground-Mount Enclosures
Type 4 Double-Door Floor-Standing with Quarter-Turn Latches
Illustration Sheet

ID = Inside Dimension

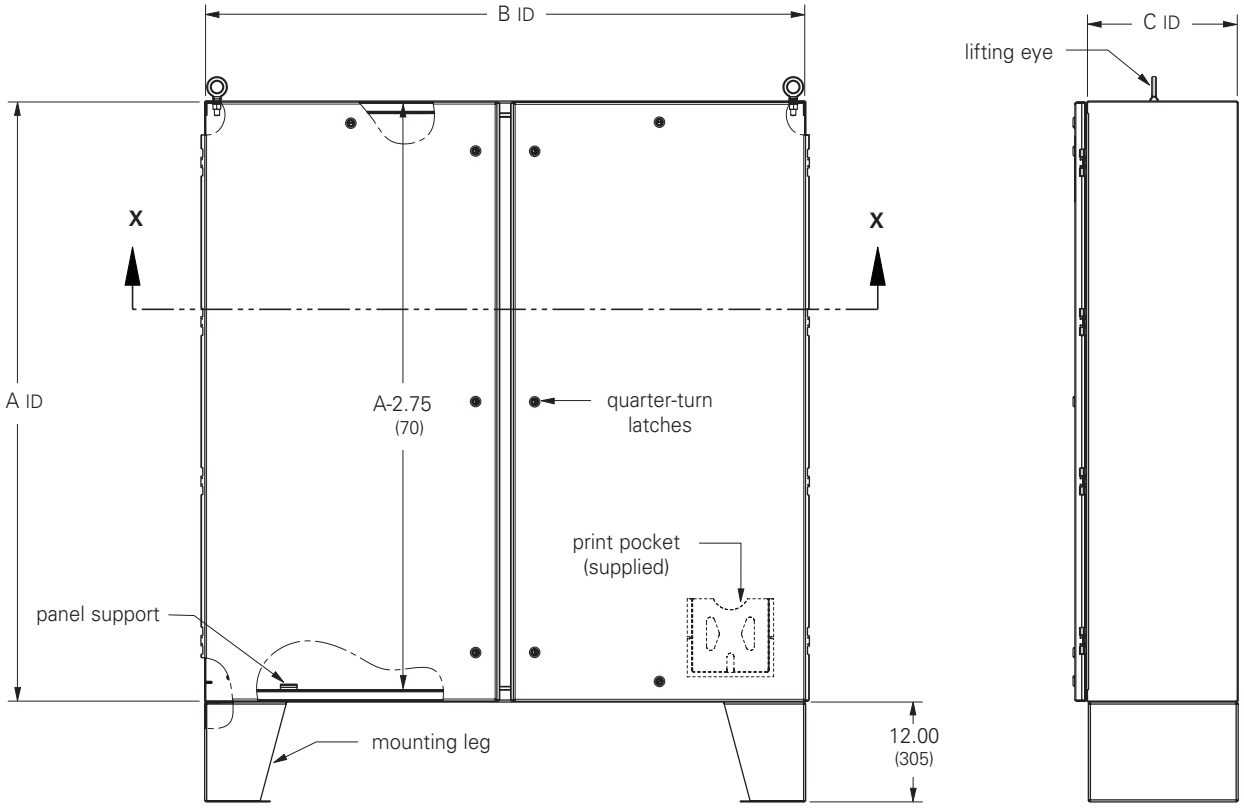

Front View **Side View**

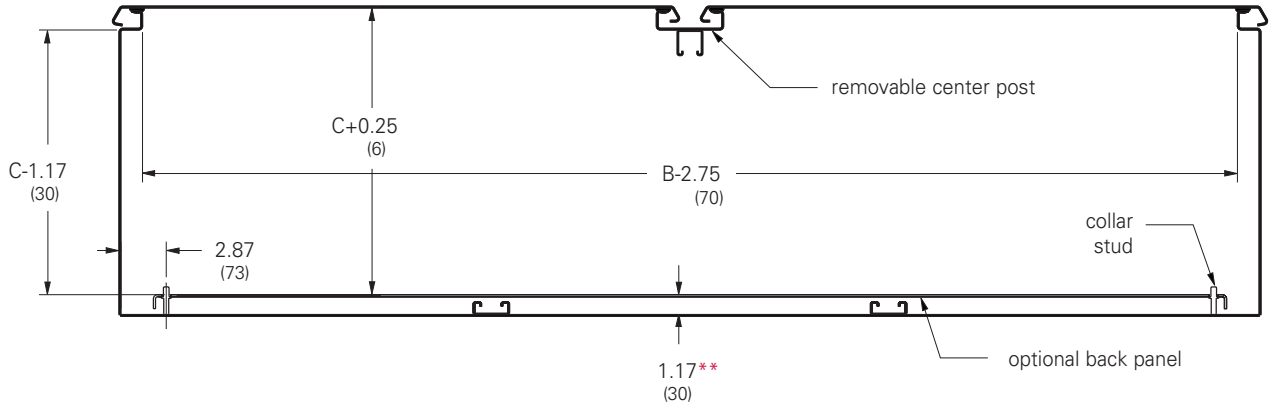

Section X-X
(enlarged)

** From top of panel stud flange to inside of enclosure

Notes: Four lifting eyes are furnished when C dimension is 24" (610 mm).
Dimensions are in inches. Millimeters shown are for reference only. Data subject to change without notice.

Ground-Mount Enclosures
Type 4 Double-Door Floor-Standing with 3-Point Locking Locking
Data Sheet and Catalog Number

Application
- Houses electrical controls and instruments
- Intended for indoor or outdoor use
- Protects against windblown dust and rain, splashing water and hose directed water

Standards
- UL 508A listed, Type 4 and Type 12
- CSA C22.2 No.94 certified, Type 4 and Type 12
- Conforms to NEMA standard for Type 3, Type 4, Type 12

Finish
- Wash and phosphate undercoat
- ANSI 61 gray polyester powder finish

Accessories
- Panels
- Panel Support Kit
- Panel Lifting Kit
- Leg stabilizer kit
- Lights
- Window kits
- Replacement handle, BD-PKHB, (see page 429)

Construction
- Enclosure and door are fabricated from code gauge steel (see table)
- All continuous welded seams are finished smooth
- Doors are secured to the body with removable concealed hinges and a center locating 3-point key-locking and padlock handle mechanism
- Additional quarter turn latches provided at the top and bottom on all enclosure doors
- Modern bevel profile on both sides of enclosure doors
- Doors have a seamless poured in-place gasket
- Removable centerpost for easy panel installation
- Formed lip around enclosure opening diverts liquids and contaminants
- Ground stud provided on doors and body
- Print pocket provided
- Heavy gauge angle supports and .375-16 colar studs are provided for mounting optional panel
- Large lifting eyebolts
- Mounting legs

Discount Schedule: C2

Subclass: DI3

Enclosure Catalog Number	Enclosure Size Height x Width x Depth A x B x C in.	mm	Body/Door Gauge	Panel Catalog Number	Panel Size Height x Width in.	mm
624810-4FD3PT	62 x 48 x 10	1575 x 1219 x 254	12/12	**AW6048P**	55.87 x 43.87	1419 x 1114
626012-4FD3PT	62 x 60 x 12	1575 x 1524 x 305	12/12	**AW6060P**	55.87 x 55.87	1419 x 1419
746012-4FD3PT	74 x 60 x 12	1879 x 1524 x 305	12/10	**AW7260P**	67.87 x 55.87	1724 x 1419
747212-4FD3PT	74 x 72 x 12	1879 x 1829 x 305	12/10	**AW7272P**	67.87 x 67.87	1724 x 1724
747224-4FD3PT	74 x 72 x 24	1879 x 1829 x 609	12/10	**AW7272P**	67.87 x 67.87	1724 x 1724

Notes: We can provide special sizes, finishes and other modifications. Consult the factory for your special requirements.

Ground-Mount Enclosures
Type 4 Double-Door Floor-Standing with 3-Point Locking
Illustration Sheet

ID = Inside Dimension

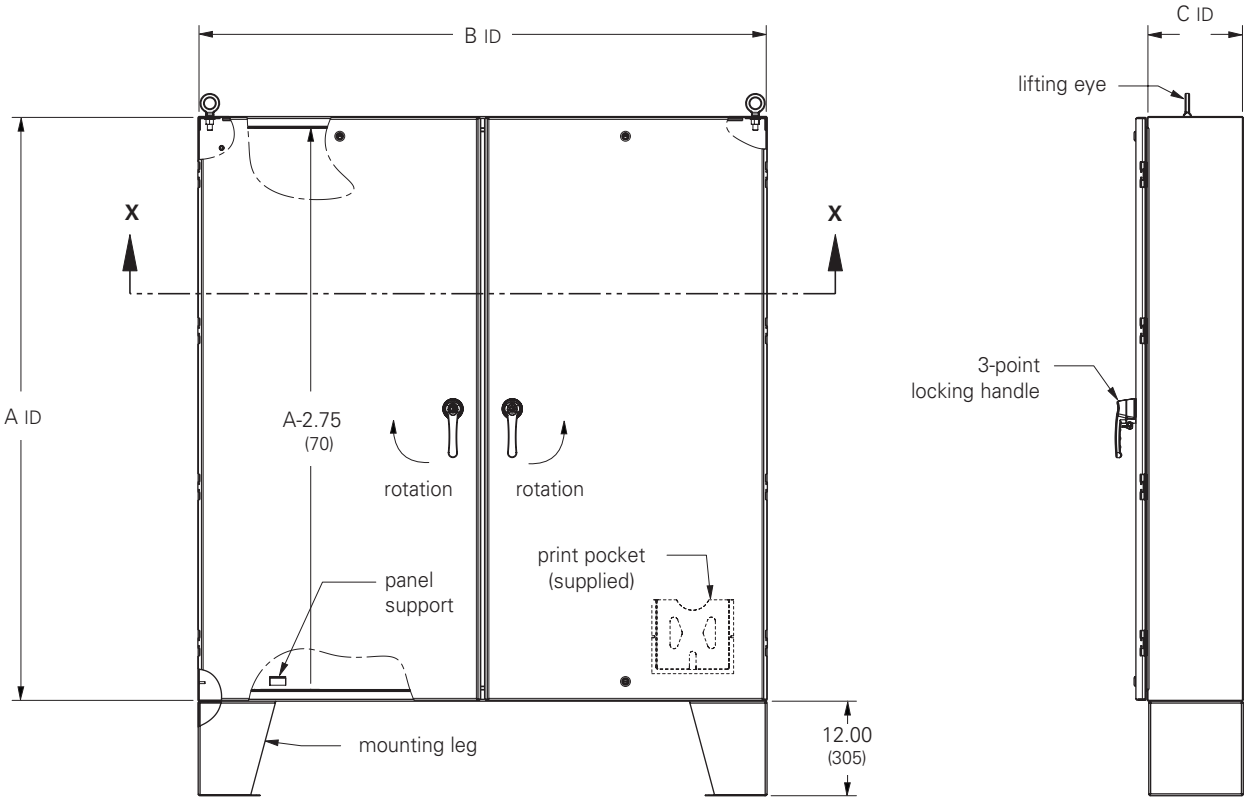

Front View **Side View**

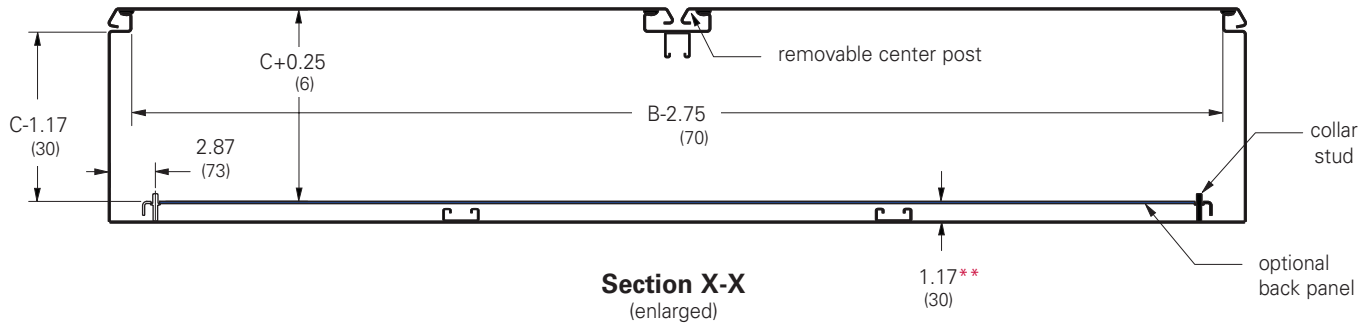

Section X-X
(enlarged)

** From top of panel stud flange to inside of enclosure

Notes: Four lifting eyes are furnished when C dimension is 24" (610 mm).
Dimensions are in inches. Millimeters shown are for reference only. Data subject to change without notice.

Ground-Mount Enclosures
Type 4 Free-Standing
Data Sheet

Application
- Houses electrical controls and instruments
- Easy access panels or rack mounts for housing optional equipment
- Intended for indoor or outdoor use
- Protects against windblown dust and rain, splashing water and hose directed water

Standards
- UL 508A listed, Type 4 and Type 12
- CSA C22.2 No.94 certified, Type 4 and Type 12
- Conforms to NEMA standard for Type 4 and Type 12
- E.I.A. RS-310-D

Finish
- Wash and phosphate undercoat
- ANSI 61 gray polyester powder finish

Accessories
- Full and half panels
- Side and swing panels
- Channel mounting hardware
- Equipment rack mounts
- Touch-up paint
- See Accessories section

Construction
- Enclosure and door are fabricated from (12) gauge steel
- All continuous welded seams are finished smooth
- Door is secured to the body with removable concealed hinges and easy to remove stainless steel door clamps on three (3) sides
- Modern bevel profile on hinge side of enclosure door
- Door has a seamless poured in-place gasket
- Ground stud provided on door and body
- Each door has a padlock hasp with sealing hole provision
- Print pocket provided
- Large lifting eyebolts are supplied
- Mounting channels are welded inside for locating panels or rack mount equipment along enclosure depth
- A variety of optional panels and accessories are available (see accessories pages 180-191)

Discount Schedule: C2

Subclass: DL0

Enclosure Catalog Number	Enclosure Size Height x Width x Depth A x B x C in.	mm	D in.	mm
722518-4FS	72.00 x 25.00 x 18.00	1829 x 635 x 457	29.12	740
723118-4FS	72.00 x 31.00 x 18.00	1829 x 787 x 457	29.12	740
723718-4FS	72.00 x 37.00 x 18.00	1829 x 940 x 457	29.12	740
722524-4FS	72.00 x 25.00 x 24.00	1829 x 635 x 610	29.12	740
723124-4FS	72.00 x 31.00 x 24.00	1829 x 787 x 610	29.12	740
723724-4FS	72.00 x 37.00 x 24.00	1829 x 940 x 610	29.12	740

Notes: We can provide special sizes, finishes and other modifications. Consult the factory for your special requirements.

Ground-Mount Enclosures
Type 4 Free-Standing
Illustration Sheet and Catalog Number

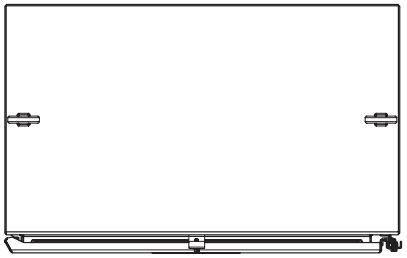

Top View

ID = Inside Dimension

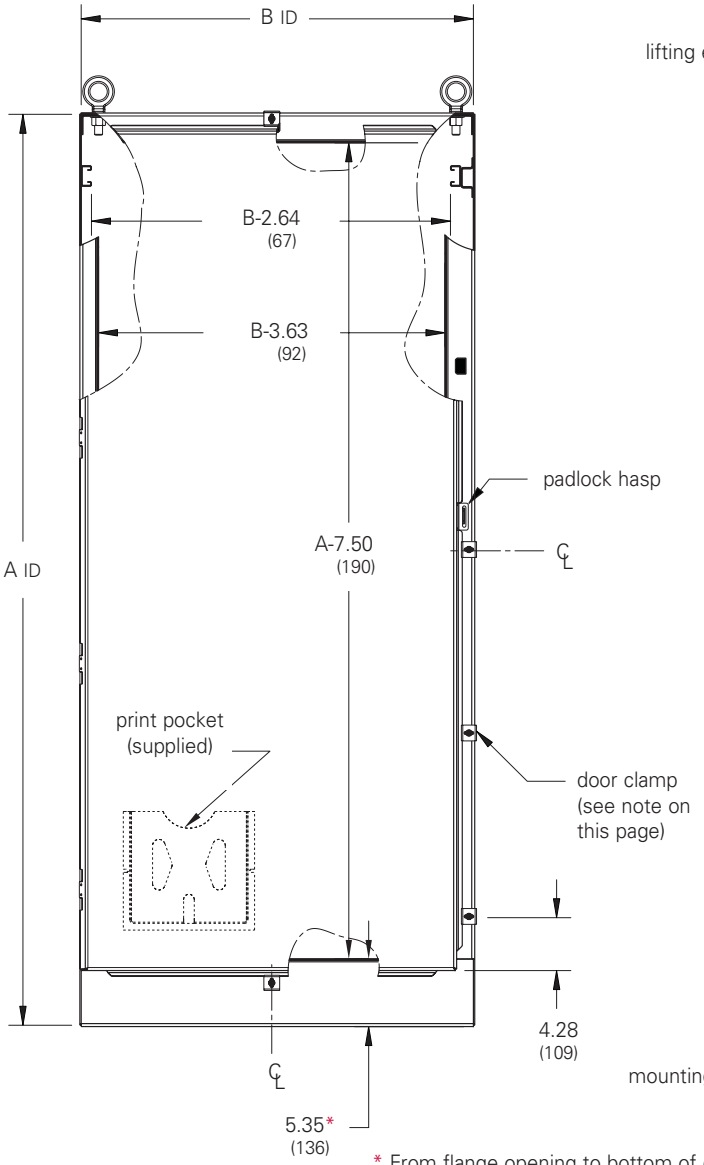

Front View

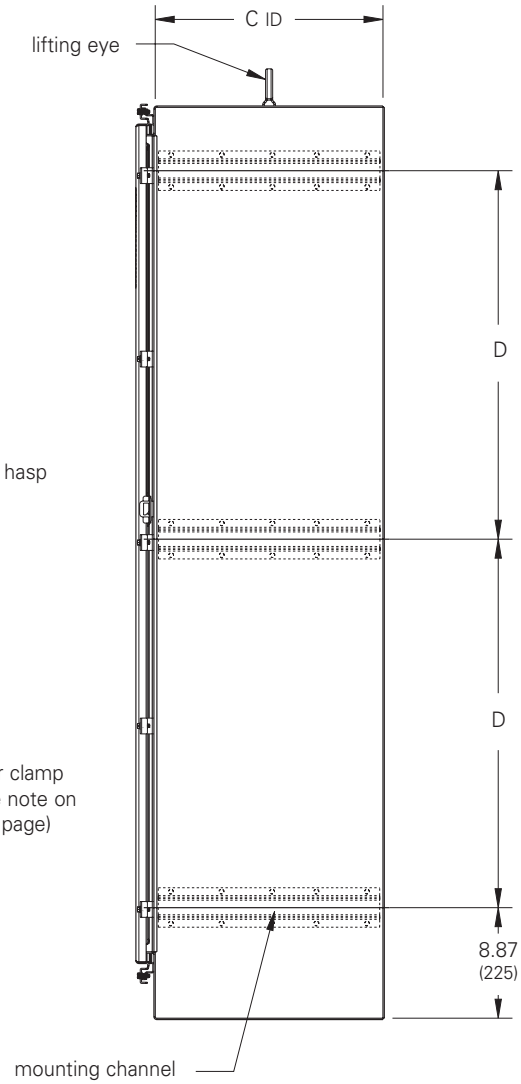

Side View

* From flange opening to bottom of enclosure

Notes: Two lifting eyes are furnished on each enclosure. Clamps are mounted along three sides of the enclosure door.
Spacing between clamps along side opposite the hinge does not exceed 15 inches.
Dimensions are in inches. Millimeters shown are for reference only. Data subject to change without notice.

Ground-Mount Enclosures
Type 4 Free-Standing with Quarter-Turn Latches
Data Sheet and Catalog Number

Application
- Houses electrical controls and instruments
- Easy access panels or rack mounts for housing optional equipment
- Intended for indoor or outdoor use
- Protects against windblown dust and rain, splashing water and hose directed water

Standards
- UL 508A listed, Type 4 and Type 12
- CSA C22.2 No.94 certified, Type 4 and Type 12
- Conforms to NEMA standard for Type 3, Type 4, Type 12
- E.I.A. RS-310-D

Finish
- Wash and phosphate undercoat
- ANSI 61 gray polyester powder finish

Accessories
- Full and half panels
- Side and swing panels
- Panel Support Kit
- Panel Lifting Kit
- Channel mounting hardware
- Equipment Rack Mounts
- Lights
- Window kits

Construction
- Enclosure body (12) gauge and door (14) gauge are fabricated from steel
- All continuous welded seams are finished smooth
- Door is secured to the body with removable concealed hinges and quarter-turn flush latches on three (3) sides
- Modern bevel profile on both sides of enclosure door
- Door has a seamless poured in-place gasket
- Formed lip around enclosure opening diverts liquids and contaminants
- Ground stud provided on door and body
- Print pocket provided
- Mounting channels are welded inside for locating panels or rack-mount equipment along enclosure depth
- Provision for mounting flourescent light
- Large lifting eyebolts

Discount Schedule: C2

Subclass: DL2

Enclosure Catalog Number	Enclosure Size Height x Width x Depth A x B x C in.	mm	D in.	mm
722418-4FSQT	72 x 24 x 18	1829 x 609 x 457	29.12	739
723024-4FSQT	72 x 30 x 24	1829 x 762 x 609	29.12	739
723624-4FSQT	72 x 36 x 24	1829 x 914 x 609	29.12	739

Notes: We can provide special sizes, finishes and other modifications. Consult the factory for your special requirements.

Ground-Mount Enclosures
Type 4 Free-Standing with Quarter-Turn Latches
Illustration Sheet

ID = Inside Dimension

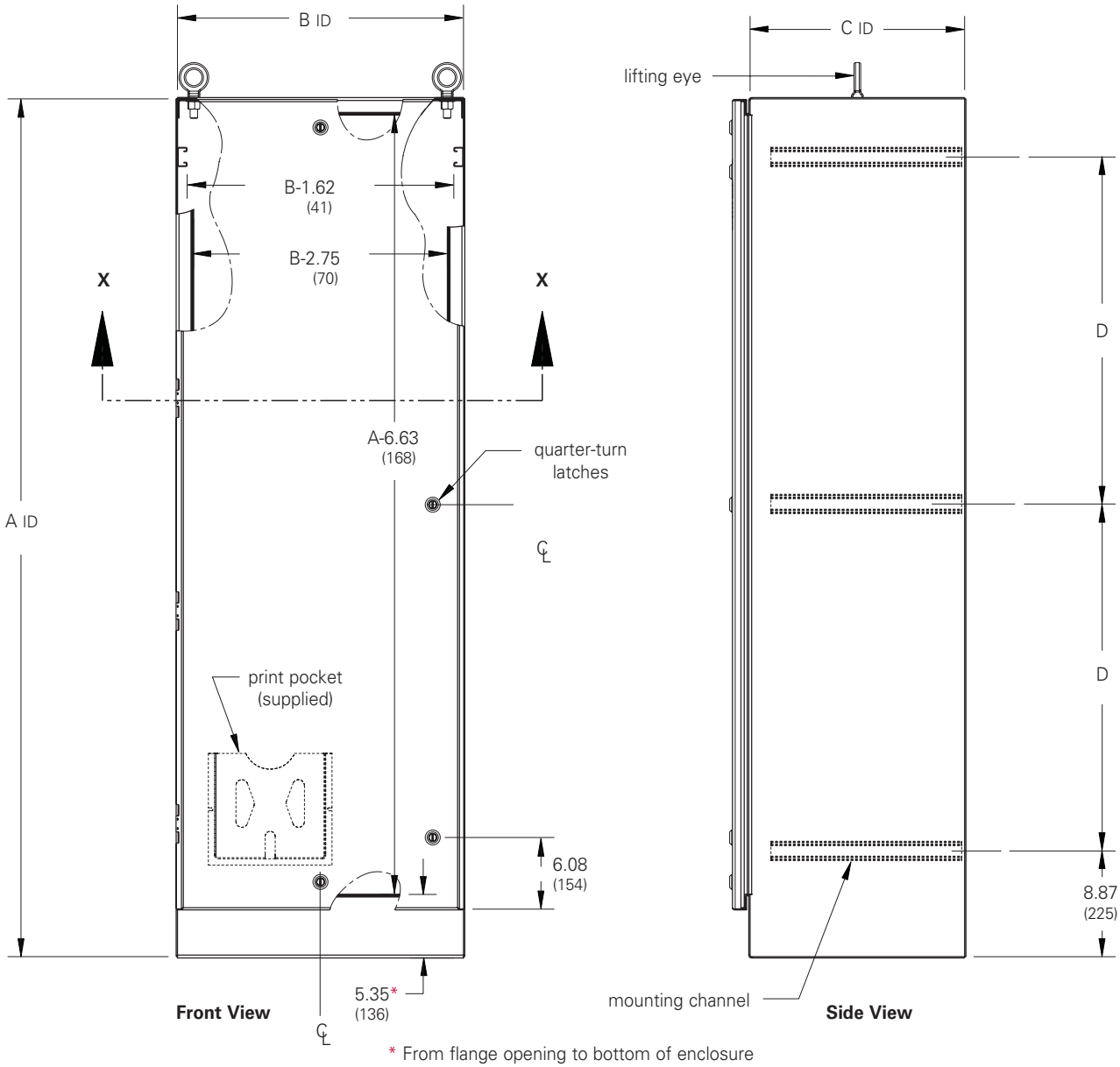

* From flange opening to bottom of enclosure

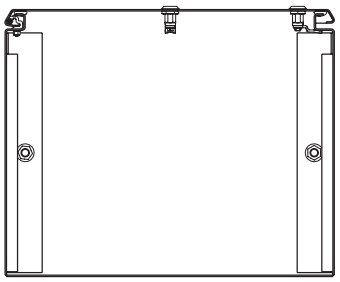

Section X-X

Notes: Two lifting eyes are furnished on each enclosure.
Dimensions are in inches. Millimeters shown are for reference only. Data subject to change without notice.

Ground-Mount Enclosures
Type 4 Single Door Free-Standing with 3-Point Locking
Data Sheet

Application
- Houses electrical controls and instruments
- Easy access panels or rack mounts for housing optional equipment
- Intended for indoor or outdoor use
- Protects against windblown dust and rain, splashing water and hose directed water

Standards
- UL 508A listed, Type 4 and Type 12
- CSA C22.2 No.94 certified, Type 4 and Type 12
- Conforms to NEMA standard for Type 3, 4, 12
- E.I.A. RS-310-D

Finish
- Wash and phosphate undercoat
- ANSI 61 gray polyester powder finish

Accessories
- Full and half panels
- Side and swing panels
- Panel Support Kit
- Panel Lifting Kit
- Channel mounting hardware
- Equipment Rack Mounts
- Lights
- Window kits
- Replacement handle, BD-PKHB, (see page 429)

Construction
- Enclosure and door are fabricated from code gauge steel (see table)
- All continuous welded seams are finished smooth
- Door is secured to the body with removable concealed hinges and a center locating 3-point key-locking and padlock handle mechanism
- Additional quarter turn latches provided at the top and bottom on all enclosure doors
- Modern bevel profile on both sides of enclosure door
- Door has a seamless poured in-place gasket
- Formed lip around enclosure opening diverts liquids and contaminants
- Ground stud provided on door and body
- Print pocket provided
- Mounting channels are welded inside for locating panels or rack-mount equipment along enclosure depth
- Provision for mounting flourescent light
- Large lifting eyebolts

Discount Schedule: C2 **Subclass: DL3**

Enclosure Catalog Number	Enclosure Size Height x Width x Depth A x B x C in.	mm	Body/Door Gauge	D in.	mm
602418-4FS3PT	60 x 24 x 18	1524 x 609 x 457	12/12	23.12	587
722418-4FS3PT	72 x 24 x 18	1829 x 609 x 457	12/12	29.12	739
723018-4FS3PT	72 x 30 x 18	1829 x 762 x 457	12/12	29.12	739
723618-4FS3PT	72 x 36 x 18	1829 x 914 x 457	12/12	29.12	739
902420-4FS3PT	90 x 24 x 20	2286 x 610 x 508	12/10	38.12	968
903620-4FS3PT	90 x 36 x 20	2286 x 914 x 508	12/10	38.12	968
603624-4FS3PT	60 x 36 x 24	1524 x 914 x 609	12/12	23.12	587
722424-4FS3PT	72 x 24 x 24	1829 x 609 x 609	12/12	29.12	739
723024-4FS3PT	72 x 30 x 24	1829 x 762 x 609	12/12	29.12	739
723624-4FS3PT	72 x 36 x 24	1829 x 914 x 609	12/12	29.12	739
903624-4FS3PT	90 x 36 x 24	2286 x 914 x 609	12/10	38.12	968
722430-4FS3PT	72 x 24 x 30	1829 x 609 x 762	12/12	29.12	739
723630-4FS3PT	72 x 36 x 30	1829 x 914 x 762	12/12	29.12	739
723636-4FS3PT	72 x 36 x 36	1829 x 914 x 609	12/12	29.12	739
903636-4FS3PT	90 x 36 x 36	2286 x 914 x 914	12/10	38.12	968

Notes: We can provide special sizes, finishes and other modifications. Consult the factory for your special requirements.

Ground-Mount Enclosures
Type 4 Single Door Free-Standing with 3-Point Locking
Illustration Sheet and Catalog Number

ID = Inside Dimension

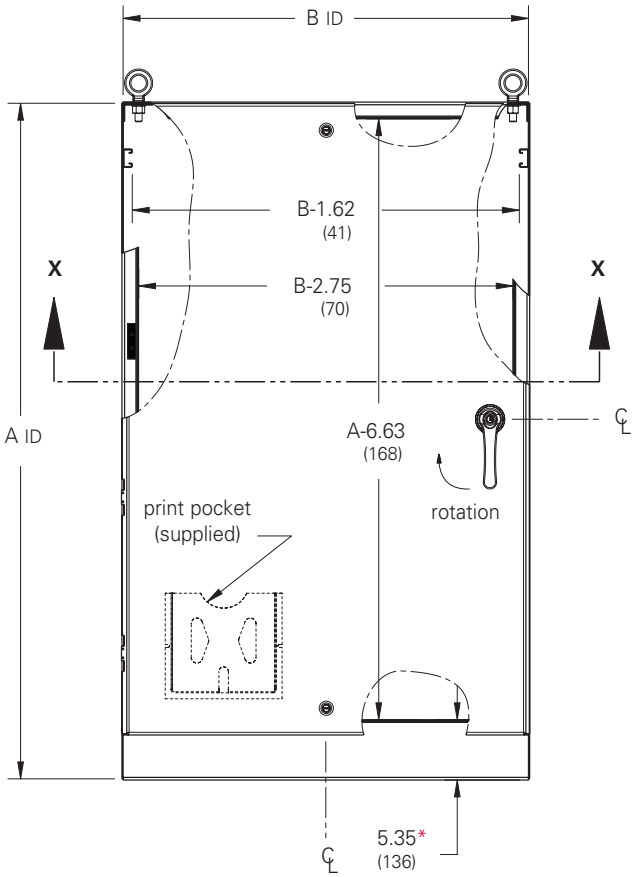

Front View

* From flange opening to bottom of enclosure

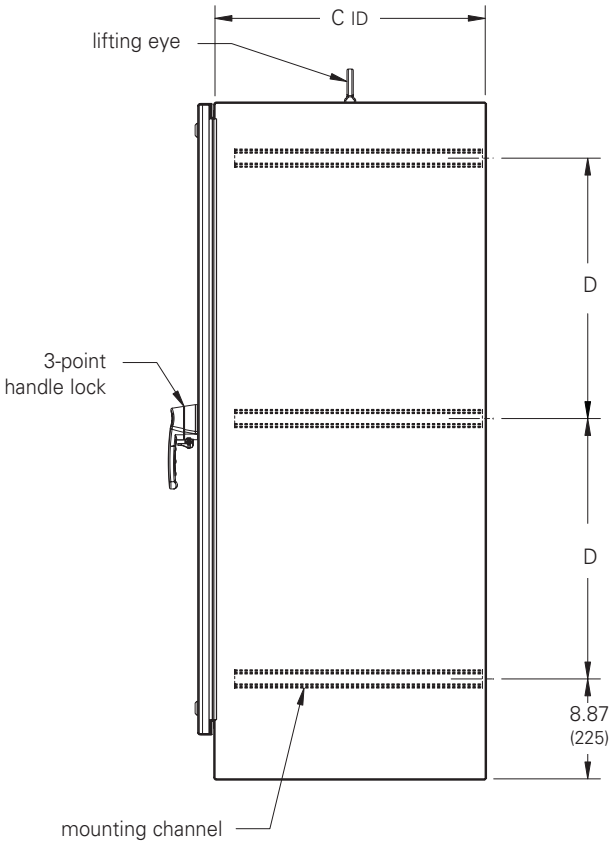

Side View

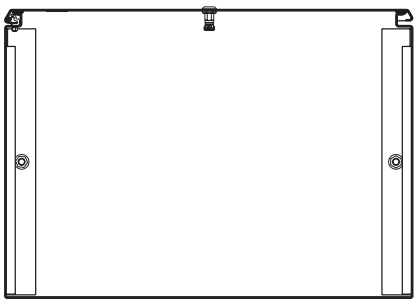

Section X-X

Notes: Four lifting eyes are furnished when C dimension is 30" (762 mm) or larger.
Dimensions are in inches. Millimeters shown are for reference only. Data subject to change without notice.

Ground-Mount Enclosures
Type 4 Single-Door Dual-Access Free-Standing with 3-Point Locking
Data Sheet

Application
- Houses electrical controls and instruments
- Easy access panels or rack mounts for housing optional equipment
- Intended for indoor or outdoor use
- Protects against windblown dust and rain, splashing water and hose directed water

Standards
- UL 508A listed, Type 4 and Type 12
- CSA C22.2 No.94 certified, Type 4 and Type 12
- Conforms to NEMA standard for Type 3, 4, 12
- E.I.A. RS-310-D

Finish
- Wash and phosphate undercoat
- ANSI 61 gray polyester powder finish

Accessories
- Full and half panels
- Side and swing panels
- Panel Support Kit
- Panel Lifting Kit
- Channel mounting hardware
- Equipment Rack Mounts
- Lights
- Window kits
- Replacement handle, BD-PKHB, (see page 429)

Construction
- Enclosure and door are fabricated from code gauge steel (see table)
- All continuous welded seams are finished smooth
- Door is secured to the body with removable concealed hinges and a center locating 3-point key-locking and padlock handle mechanism
- Additional quarter turn latches provided at the top and bottom on all enclosure doors
- Modern bevel profile on both sides of enclosure door
- Door has a seamless poured in-place gasket
- Formed lip around enclosure opening diverts liquids and contaminants
- Ground stud provided on door and body
- Print pocket provided
- Mounting channels are welded inside for locating panels or rack-mount equipment along enclosure depth
- Provision for mounting flourescent light
- Large lifting eyebolts

Discount Schedule: C2

Subclass: DL3

Notes: We can provide special sizes, finishes and other modifications. Consult the factory for your special requirements.

Ground-Mount Enclosures
Type 4 Single-Door Dual-Access Free-Standing with 3-Point Locking
Illustration Sheet and Catalog Number

Enclosure Catalog Number ANSI 61 Gray Carbon Steel	Enclosure Size Height x Width x Depth A x B x C in.	mm	Body/Door Gauge	D in.	mm
722424-4FSDA3PT	72.00 x 24.00 x 24.00	1829 x 610 x 610	12/12	29.12	740
723024-4FSDA3PT	72.00 x 30.00 x 24.00	1829 x 762 x 610	12/12	29.12	740
723624-4FSDA3PT	72.00 x 36.00 x 24.00	1829 x 914 x 610	12/12	29.12	740
903624-4FSDA3PT	90.00 x 36.00 x 24.00	2286 x 914 x 610	12/10	38.12	968
722430-4FSDA3PT	72.00 x 24.00 x 30.00	1829 x 610 x 762	12/12	29.12	740
722436-4FSDA3PT	72.00 x 24.00 x 36.00	1829 x 610 x 914	12/12	29.12	740
723636-4FSDA3PT	72.00 x 36.00 x 36.00	1829 x 914 x 914	12/12	29.12	740
903636-4FSDA3PT	90.00 x 36.00 x 36.00	2286 x 914 x 914	12/10	38.12	968

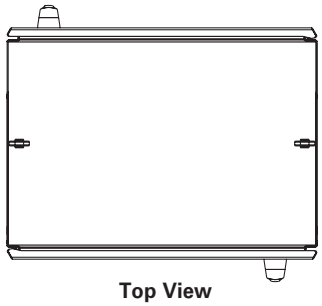

Top View

ID = Inside Dimension

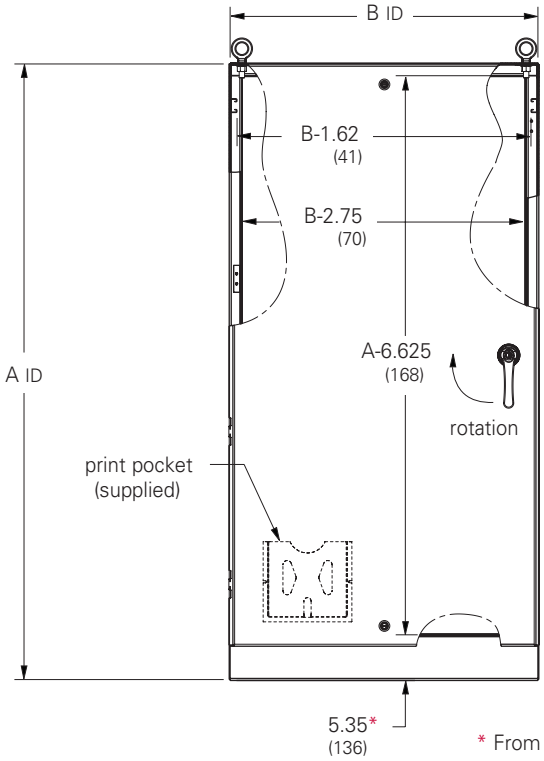

* From flange opening to bottom of enclosure

Front View

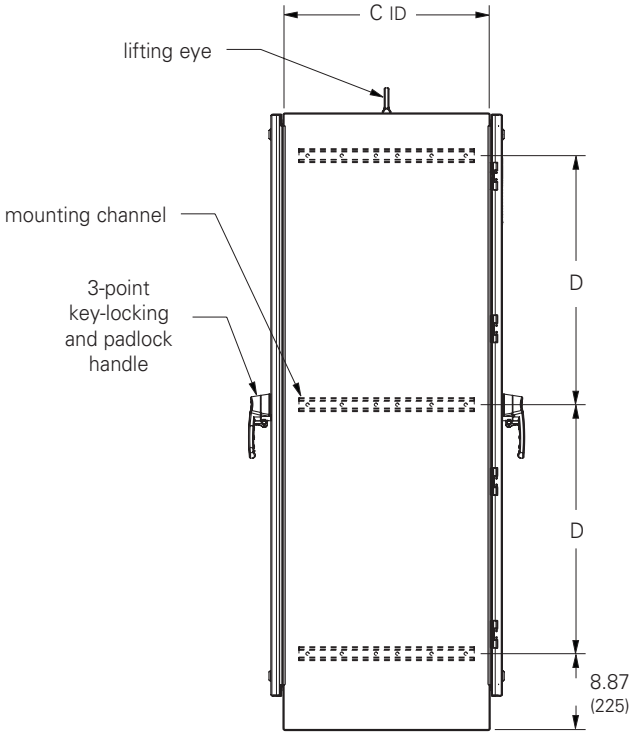

Side View

Notes: Four lifting eyes are furnished when C dimensions is 30.00 (762 mm) or more.
Dimensions are in inches. Millimeters shown are for reference only. Data subject to change without notice.

Ground-Mount Enclosures
Type 4 Multi-Door Free-Standing with 3-Point Locking
Data Sheet

Application
- Houses electrical controls and instruments
- Suitable for indoor or outdoor use
- Protects against circulating and windblown dust and rain, falling dirt, splashing water, and hose-directed water

Standards
- UL 508A, Type 4
- CSA C22.2 No.94, Type 4
- NEMA 250, Type 4

Accessories
- Channel mounting hardware
- Touch-up paint
- Replacement handle, BD-PKHB, (see page 429)
- See Accessories section

Finish
- Wash and phosphate undercoat
- ANSI 61 gray polyester powder finish

Construction
- Enclosure body (10) gauge and doors (12) gauge are fabricated from steel
- All continuous welded seams are finished smooth
- Doors are secured to the body with removable concealed hinges and a center locating 3-point key-locking and padlock handle mechanism
- Additional quarter turn latches provided at the top and bottom on all enclosure doors
- Modern bevel profile on hinge side of enclosure doors
- Doors have an oil-resistant gasket
- Ground stud provided on doors and body
- Print pockets provided
- Heavy steel stiffeners welded across the back provide enclosure rigidity
- Lighting mounting channel provided
- Large lifting eyebolts are supplied
- Three styles of enclosure construction:
  1. Three-door: single and double-door section
  2. Four-door: (2) double door sections
  3. Five-door: single and (2) double-door sections
- Panels have a white enamel finish

Discount Schedule: C2

Subclass: DMM

Notes: We can provide special sizes, finishes and other modifications. Consult the factory for your special requirements.

Ground-Mount Enclosures
Type 4 Three-Door Free-Standing with 3-Point Locking
Illustration Sheet and Catalog Number

Enclosure Catalog Number	Enclosure Size Height x Width x Depth in.	mm	Body/Door Gauge	Panel A Size Height x Width in.	mm	Panel B Size Height x Width in.	mm
8611214-4FS	86.00 x 112.00 x 14.00	2184 x 2845 x 356	10/12	78.00 x 33.00	1981 x 838	78.00 x 70.00	1981 x 1778

Top View

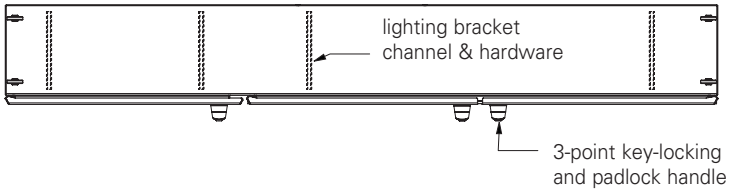

ID = Inside Dimension

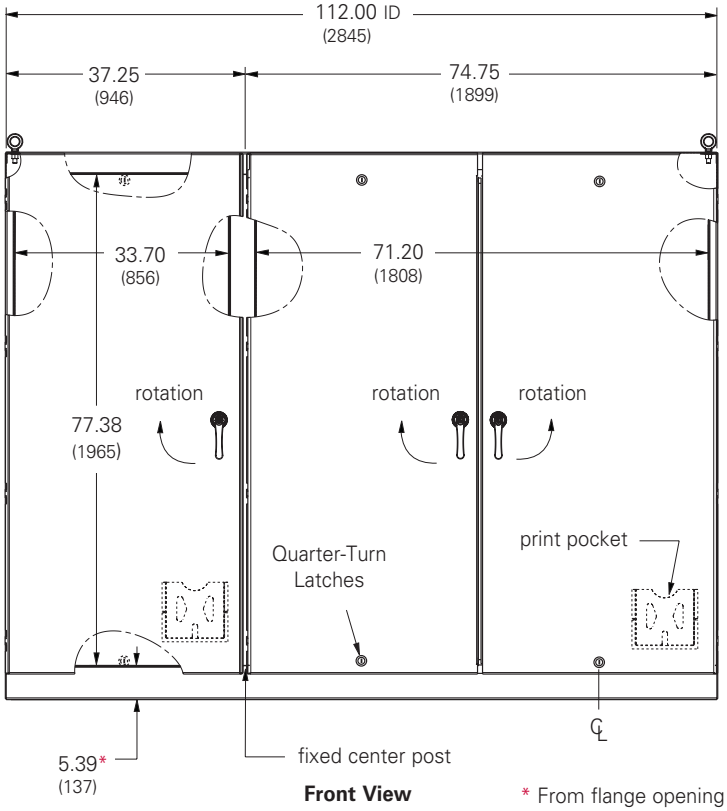

Front View

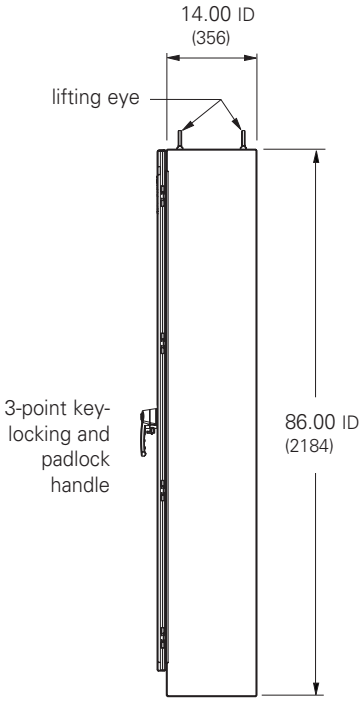

Side View

* From flange opening to bottom of enclosure

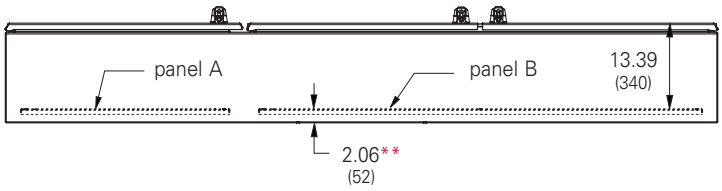

Bottom View

** From front of panel to inside of enclosure

Notes: Dimensions are in inches. Millimeters shown are for reference only. Data subject to change without notice.

Ground-Mount Enclosures
Type 4 Four-Door Free-Standing with 3-Point Locking
Illustration Sheet and Catalog Number

Enclosure Catalog Number	Enclosure Size Height x Width x Depth in.	Enclosure Size Height x Width x Depth mm	Body/Door Gauge	Panel Size Height x Width in.	Panel Size Height x Width mm
8615014-4FS	86.00 x 150.00 x 14.00	2184 x 3810 x 356	10/12	78.00 x 70.00	1981 x 1778

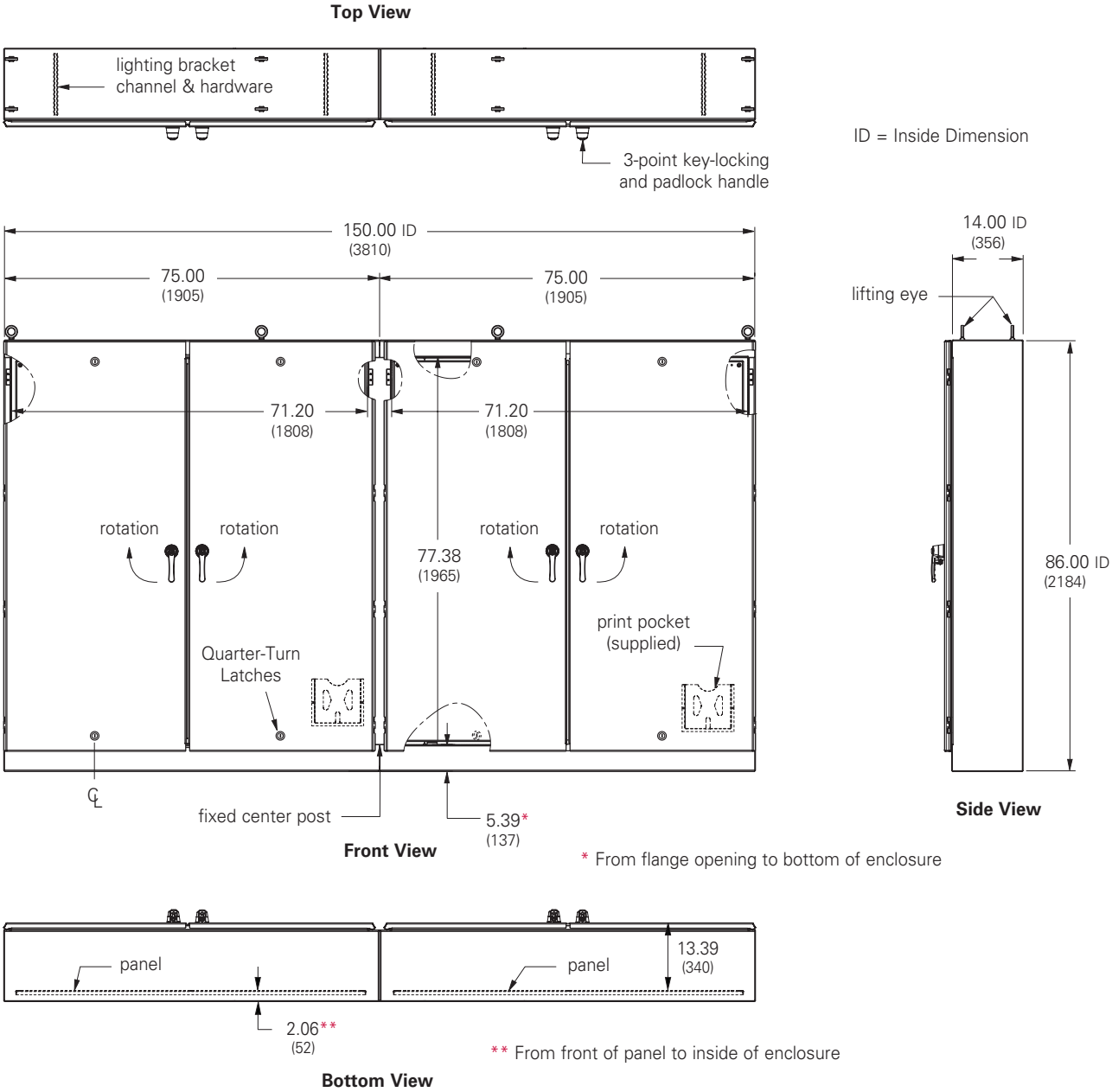

Notes: Dimensions are in inches. Millimeters shown are for reference only. Data subject to change without notice.

Ground-Mount Enclosures
Type 4 Five-Door Free-Standing with 3-Point Locking
Illustration Sheet and Catalog Number

Enclosure Catalog Number	Enclosure Size Height x Width x Depth in.	mm	Body/Door Gauge	Panel A Size Height x Width in.	mm	Panel B Size Height x Width in.	mm
8618714-4FS	86.00 x 187.50 x 14.00	2184 x 4763 x 356	10/12	78.00 x 33.00	1981 x 838	78.00 x 70.00	1981 x 1778

Top View

ID = Inside Dimension

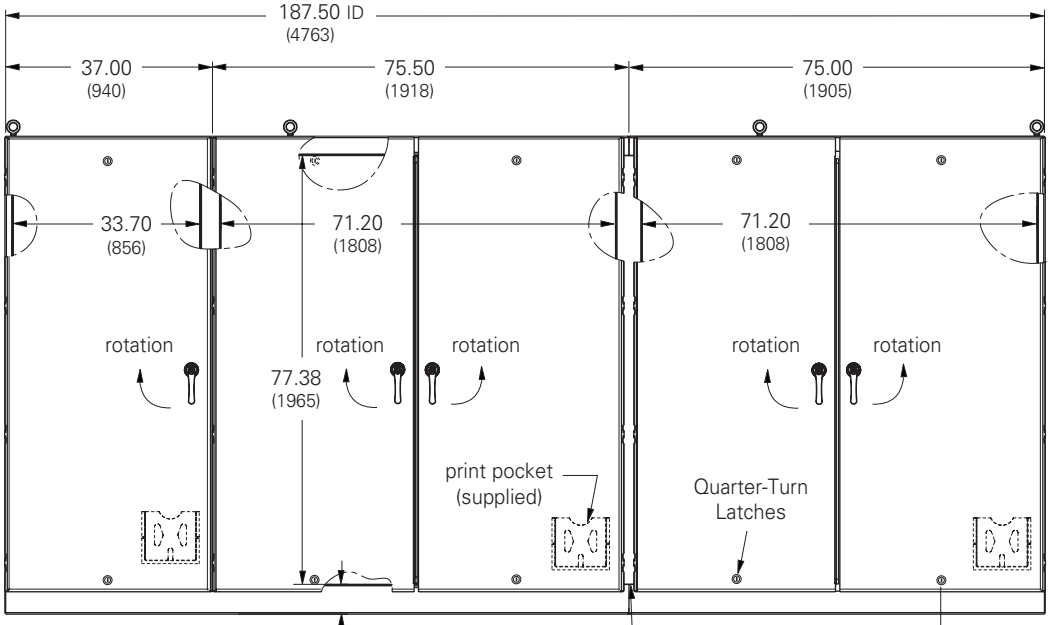

Front View

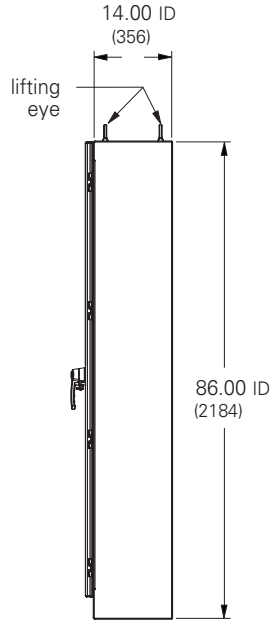

Side View

* From flange opening to bottom of enclosure

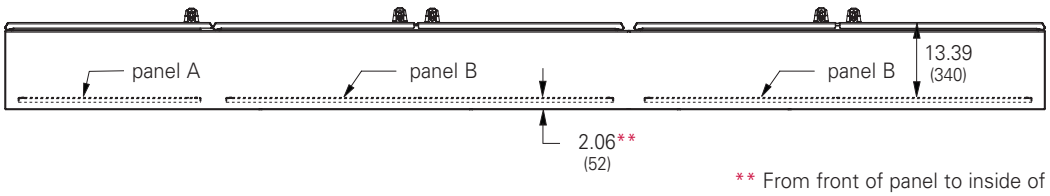

** From front of panel to inside of enclosure

Bottom View

Notes: Dimensions are in inches. Millimeters shown are for reference only. Data subject to change without notice.

Ground-Mount Enclosures
Type 4 EnviroShield™ Free-Standing with 3-Point Locking
Data Sheet

Application
- Houses electrical controls and electrical instruments in harsh environments
- Provides quick and easy access indoors and out
- Protects against circulating dust, falling dirt, dripping non-corrosive liquids, rain, sleet, ice, splashing and hose directed water

Standards
- UL 508A listed, Type 3R, Type 4, Type 4X, Type 12
- Conforms to NEMA standard for Type 3R, Type 4, Type 4X, Type 12
- NSF Criteria C-2
- E.I.A. RS-310-D

Finish
- Type 4 enclosures have a washed and phosphate undercoat with ANSI 61 gray polyester powder inside and out

Accessories
- Full and half panels
- Side and swing panels
- Center post
- Channel mounting hardware
- Touch-up paint
- Climate control
- Mounting legs
- Rack mounting angles
- Swing out mounting frames
- See Accessories section
- Replacement handle, BD-PKHB (see page 429).

Construction
- Enclosure and door are fabricated from (12) gauge steel
- All continuous welded seams are finished smooth
- Doors are secured to the body with removable concealed hinges and a center locating 3-point key-locking and padlock handle mechanism
- Modern bevel profile on both sides of enclosure doors
- Removable center post
- Doors have a Neoprene IV2 closed cell gasket
- Ground studs provided on doors and body
- Print pocket provided
- Large lifting eyes are integrated with sides of enclosure
- Mounting channels are welded inside for locating panels or rack mounts along enclosure depth, as well as mounting studs for fixed panels
- Swing panels, single full and single half panels can be installed in double-door enclosures when the center post is used
- A variety of optional panels and accessories are available, (see pages 180-191)

Discount Schedule: C2

Subclass: VR0

Notes: We can provide special sizes, finishes and other modifications. Consult the factory for your special requirements.

Ground-Mount Enclosures
Type 4 EnviroShield™ Free-Standing with 3-Point Locking
Illustration Sheet and Catalog Number

Enclosure Catalog Number ANSI 61 Gray Carbon Steel	Enclosure Size Height x Width x Depth A x B x C in.	mm	D in.	mm	E in.	mm
ES-604812-4	60.00 x 48.00 x 12.00	1524 x 1219 x 305	65.87	1673	64.44	1637
ES-604816-4	60.00 x 48.00 x 16.00	1524 x 1219 x 406	65.87	1673	64.44	1637
ES-604820-4	60.00 x 48.00 x 20.00	1524 x 1219 x 508	65.87	1673	64.44	1637
ES-604824-4	60.00 x 48.00 x 24.00	1524 x 1219 x 609	65.87	1673	64.44	1637
ES-606012-4	60.00 x 60.00 x 12.00	1524 x 1524 x 305	65.87	1673	64.44	1637
ES-606016-4	60.00 x 60.00 x 16.00	1524 x 1524 x 406	65.87	1673	64.44	1637
ES-606020-4	60.00 x 60.00 x 20.00	1524 x 1524 x 508	65.87	1673	64.44	1637
ES-606024-4	60.00 x 60.00 x 24.00	1524 x 1524 x 609	67.87	1724	64.44	1637
ES-726012-4	72.00 x 60.00 x 12.00	1829 x 1524 x 305	77.87	1978	76.44	1941
ES-726016-4	72.00 x 60.00 x 16.00	1829 x 1524 x 406	77.87	1978	76.44	1941
ES-726020-4	72.00 x 60.00 x 20.00	1829 x 1524 x 508	77.87	1978	76.44	1941
ES-726024-4	72.00 x 60.00 x 24.00	1829 x 1524 x 609	77.87	1978	76.44	1941
ES-727212-4	72.00 x 72.00 x 12.00	1829 x 1829 x 305	77.87	1978	76.44	1941
ES-727216-4	72.00 x 72.00 x 16.00	1829 x 1829 x 406	77.87	1978	76.44	1941
ES-727220-4	72.00 x 72.00 x 20.00	1829 x 1829 x 508	77.87	1978	76.44	1941
ES-727224-4	72.00 x 72.00 x 24.00	1829 x 1829 x 609	79.87	2028	76.44	1941

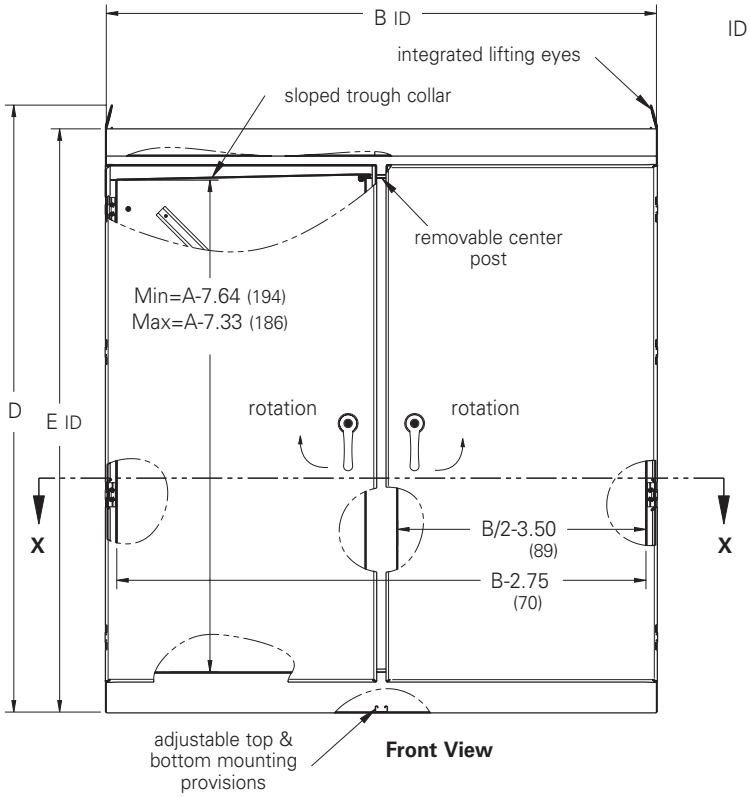

Front View

ID = Inside Dimension

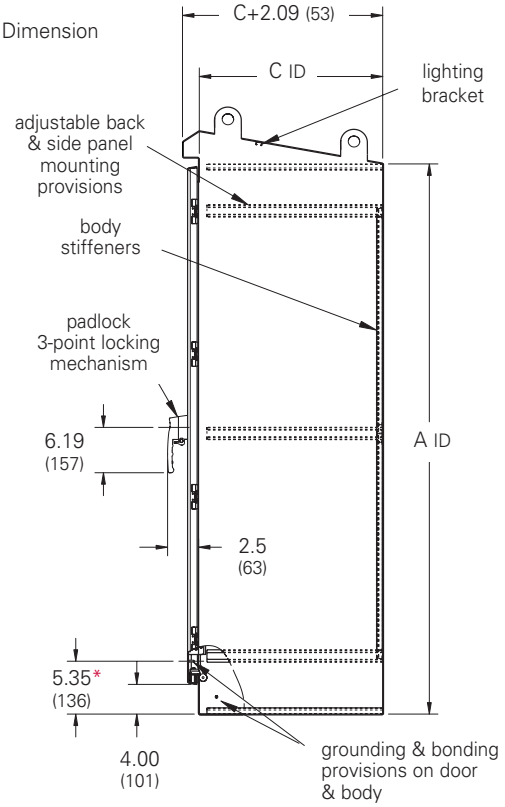

Side View

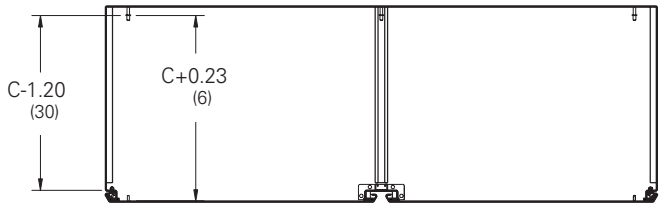

Section X-X

* From flange opening to bottom of enclosure

Notes: Dimensions are in inches. Millimeters shown are for reference only. Data subject to change without notice.

Free-Standing Enclosure Accessories
Type 4 Single-Door
Full and Half Panel
Illustration Sheet and Catalog Number

Discount Schedule: C2
Subclass: DSD

Full Panel (Single-Door)

Panel Catalog Number	Panel Size Height x Width A x B in.	mm	C in.	mm	Fits Enclosure Height x Width in.	mm
AF6024P	47.87 x 19.87	1216 x 505	23.12	587	60.00 x 24.00	1524 x 610
AF6036P	47.87 x 31.87	1216 x 809	23.12	587	60.00 x 36.00	1524 x 914
AF7224P	59.87 x 19.87	1521 x 505	29.12	740	72.00 x 24.00	1829 x 610
AF7230P	59.87 x 25.87	1521 x 657	29.12	740	72.00 x 30.00	1829 x 762
AF7236P	59.87 x 31.87	1521 x 809	29.12	740	72.00 x 36.00	1829 x 914

Half Panel (Single-Door)

Panel Catalog Number	Panel Size Height x Width A x B in.	mm	C in.	mm	Fits Enclosure Height x Width in.	mm
AF6024HP	24.75 x 19.87	629 x 505	23.12	587	60.00 x 24.00	1524 x 610
AF6036HP	24.75 x 31.87	629 x 809	23.12	587	60.00 x 36.00	1524 x 914
AF7224HP	30.75 x 19.87	781 x 505	29.12	587	72.00 x 24.00	1829 x 610
AF7230HP	30.75 x 25.87	781 x 657	29.12	587	72.00 x 30.00	1829 x 762
AF7236HP	30.75 x 31.87	781 x 809	29.12	587	72.00 x 36.00	1829 x 914

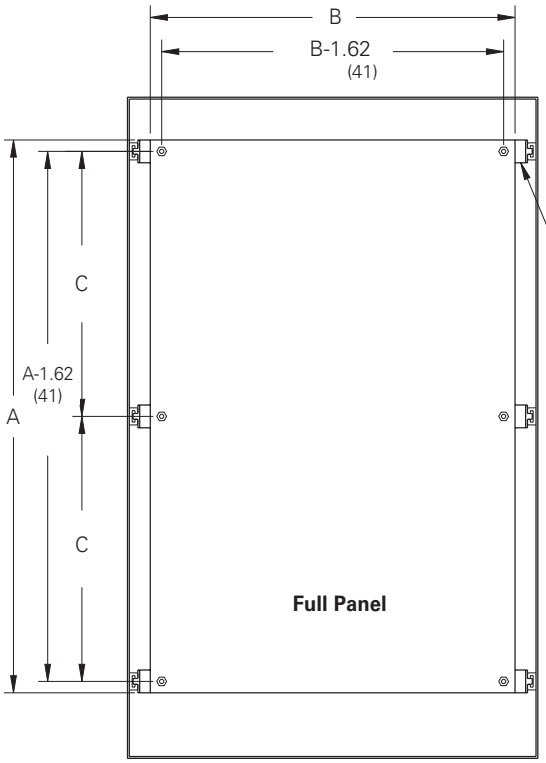

Full Panel Mounting

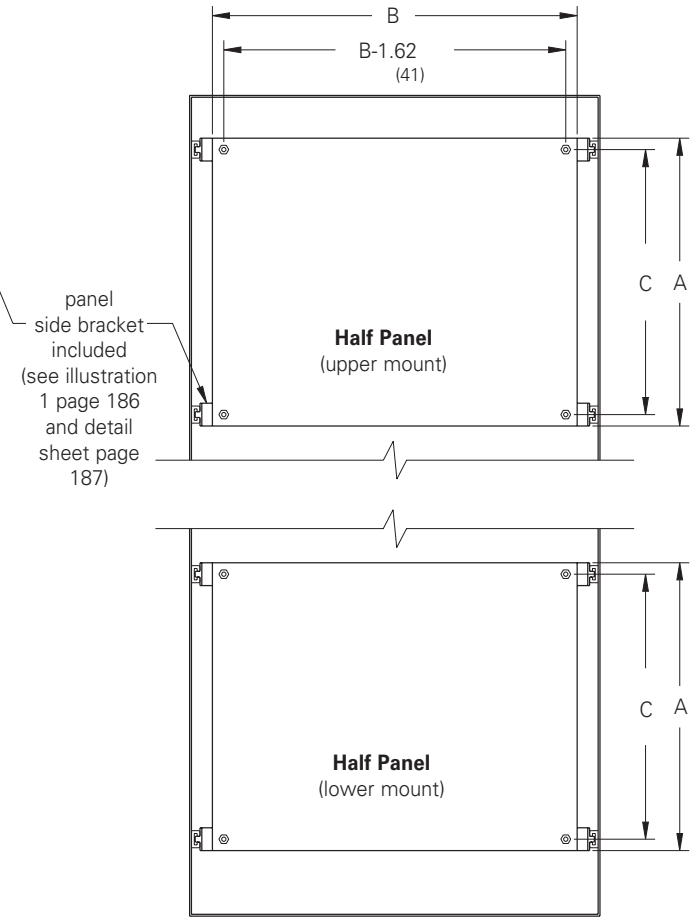

Half Panel Mounting

Note: Full and Half panel for single-door, single and dual-access enclosures are (12) gauge steel and furnished with panel side brackets and all hardware necessary for channel and panel mounting. Half Panels can be mounted in either the upper or lower portion of the enclosure. Free standing design permits the panel to adjust along the depth of the enclosure. With dual-access enclosures, Full and Half panels can be mounted back-to-back.

Notes: Dimensions are in inches. Millimeters shown are for reference only. Data subject to change without notice.

Free-Standing Enclosure Accessories
Type 4 Double-Door

Discount Schedule: C2

Full Panel

Subclass: DSD

Illustration Sheet and Catalog Number

Panel Catalog Number	Panel Size Height x Width A x B in.	mm	C in.	mm	D in.	mm	Fits Enclosure Height x Width in.	mm
AF6048P	47.87 x 43.87	1216 x 1114	23.12	587	21.12	530	60.00 x 48.00	1524 x 1219
AF6060P	47.87 x 55.87	1216 x 1419	23.12	587	27.12	689	60.00 x 60.00	1524 x 1524
AF7248P	59.87 x 43.87	1521 x 1114	29.12	740	21.12	530	72.00 x 48.00	1829 x 1219
AF7260P	59.87 x 55.87	1521 x 1419	29.12	740	27.12	689	72.00 x 60.00	1829 x 1524
AF7272P	59.87 x 67.87	1521 x 1724	29.12	740	33.12	841	72.00 x 72.00	1829 x 1829

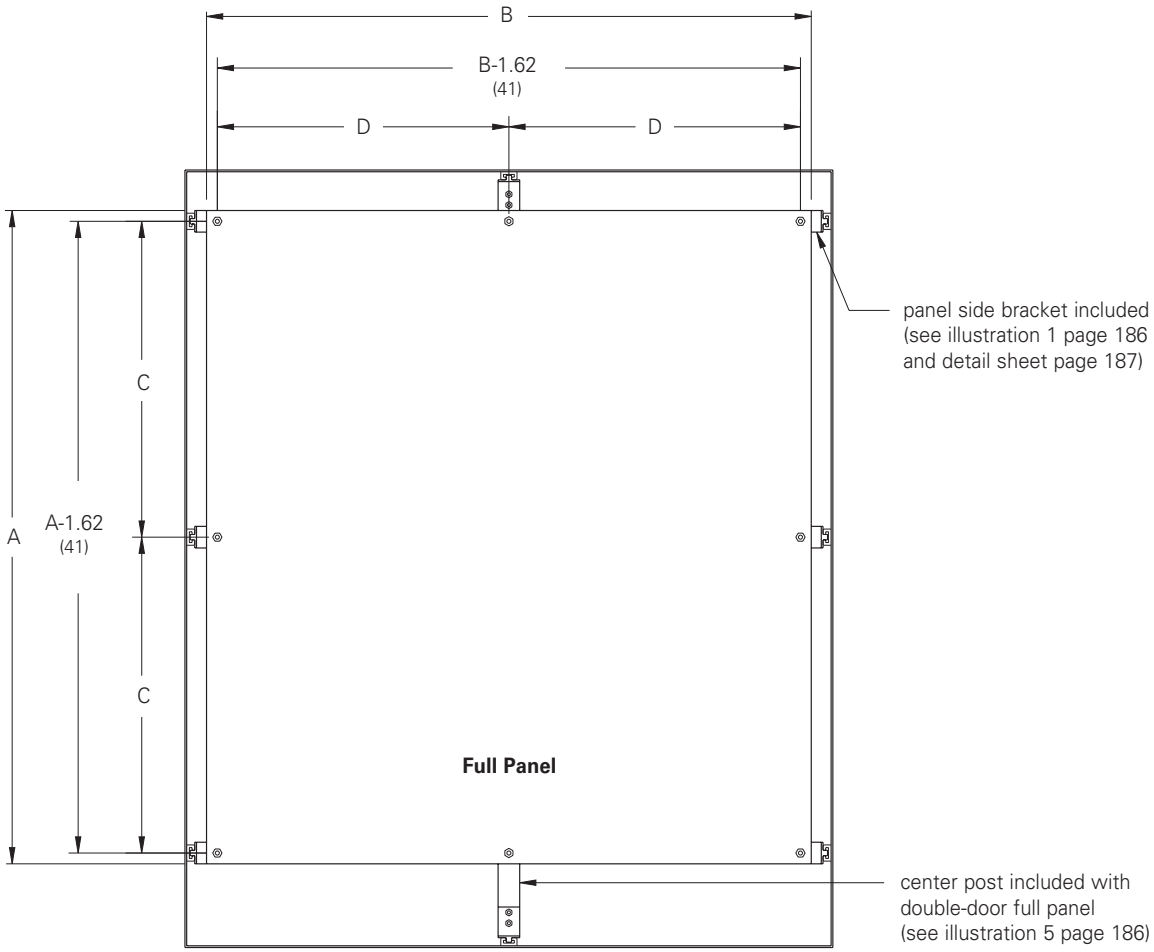

Full Panel Mounting

Notes: Full Panel for double-door, single and dual-access enclosures are (10) gauge steel and furnished with Panel Brackets, Center Post assembly, panel handle kit and all hardware necessary for channel and panel mounting. The Center Post assembly offers additional support of panel and equipment. Free-standing design permits the panel to adjust along the depth of the enclosure. With dual-access enclosures, Full and Half Panels can be mounted back-to-back.

Notes: Dimensions are in inches. Millimeters shown are for reference only. Data subject to change without notice.

Free-Standing Enclosure Accessories
Type 4 Double-Door

Discount Schedule: C2

Half Panel

Subclass: DSD

Illustration Sheet and Catalog Number

Panel Catalog Number	Panel Size Height x Width A x B in.	mm	C in.	mm	D in.	mm	Fits Enclosure Height x Width in.	mm
AF6048HP	24.75x43.87	629x1114	23.12	587	21.12	536	60.00x48.00	1524x1219
AF7248HP	30.75x43.87	781x1114	29.12	740	21.12	536	72.00x48.00	1829x1219
AF7260HP	30.75x55.87	781x1419	29.12	740	7.12	181	72.00x60.00	1829x1524
AF7272HP	30.75x67.87	781x1724	29.12	740	33.12	841	72.00x72.00	1829x1829

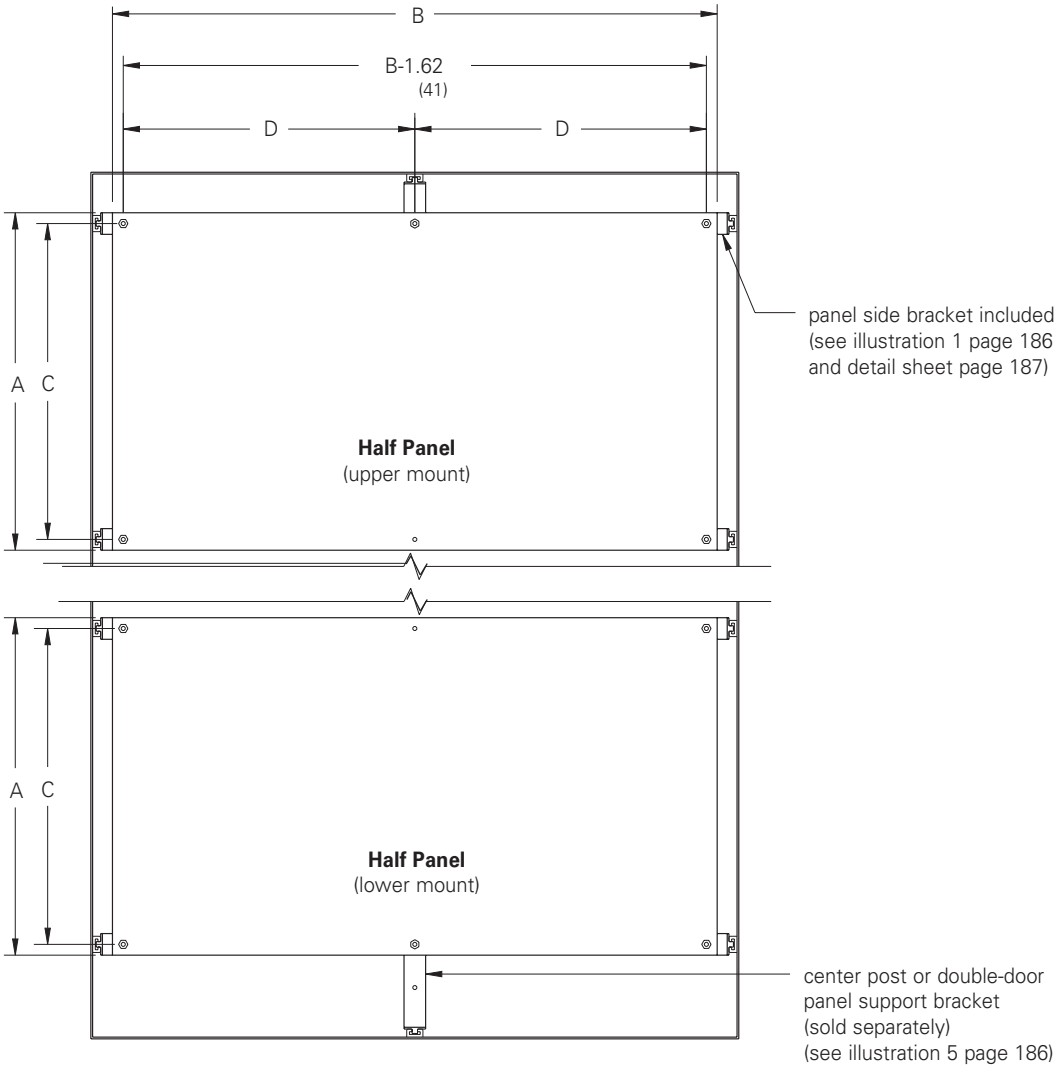

Half Panel Mounting

Note: Half panel for double-door, single and dual-access enclosures are (12) gauge steel and furnished with Panel Brackets and all hardware necessary for channel and panel mounting. **A Center Post assembly or a double-door panel support bracket (catalog number AFSUP2) for additional support of the panel is optional and sold separately.** Free-standing design permits the panel to adjust along the depth of the enclosure. With dual-access enclosures, Full and Half Panels can be mounted back-to-back.

Notes: Dimensions are in inches. Millimeters shown are for reference only. Data subject to change without notice.

Free-Standing Enclosure Accessories Type 4

Side Panel And Center Post

Illustration Sheet and Catalog Number

Discount Schedule: C2

Side Panel - Subclass: DSD

Panel Catalog Number	Panel Size Height x Width A x B in.	mm	C in.	mm	Fits Enclosure Height in.	mm	Depth* in.	mm
AF6018SP	48.37 x 13.87	1229 x 340	23.12	587	60.00	1524	18.00	457
AF7218SP	60.37 x 13.87	1533 x 340	29.12	740	72.00	1829	18.00	457
AF7224SP	60.37 x 19.87	1533 x 505	29.12	740	72.00	1829	24.00	610

* Back panels restrict the movement of side panels and will prohibit mounting in some depths. See detail sheet for back panel spacing.

Center Post - Subclass: DS0

Center Post Catalog Number	A in.	mm	B in.	mm	Fits Enclosure Height in.	mm
AF60CPS	58.37	1483	23.12	587	60.00	1524
AF72CPS	70.37	1787	29.12	740	72.00	1829

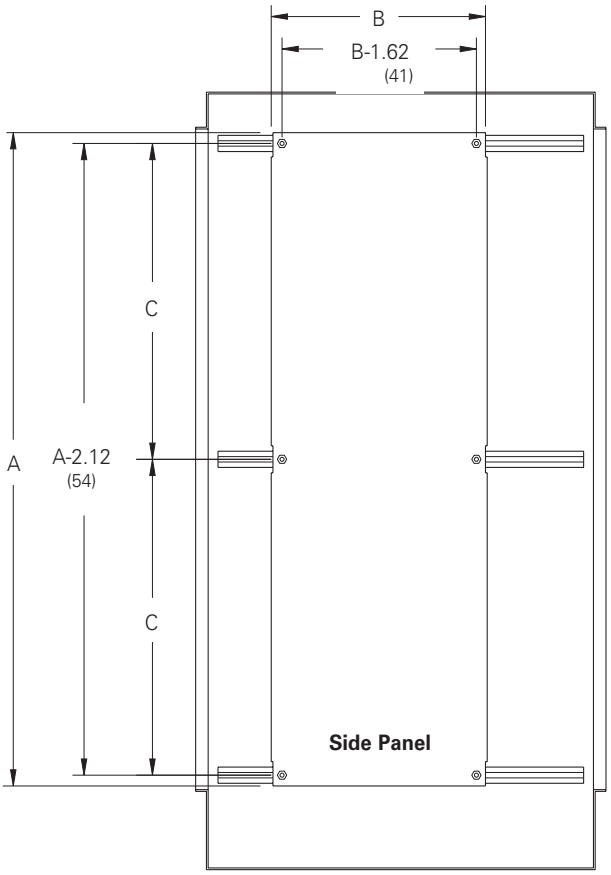

Side Panel Mounting

Side Panels are (12) gauge steel and furnished with hardware necessary for channel mounting. They will fit any width enclosure and are adjustable along its depth, however, when Full or Half Panels are installed, movement will be restricted and with some depths make side mounting prohibitive.

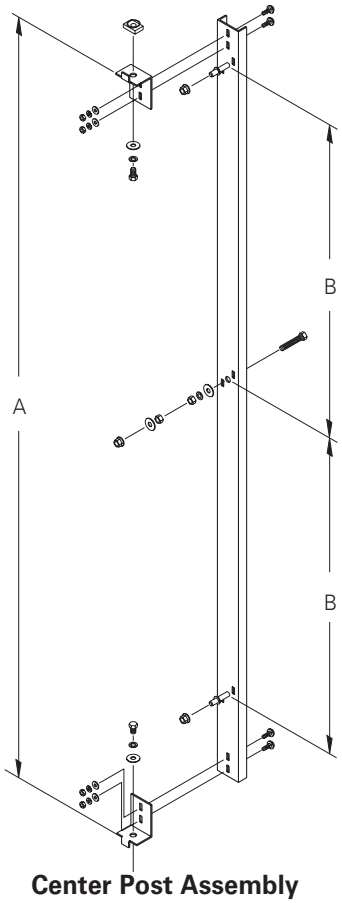

Center Post Assembly

Center Post assembly is furnished with all double-door Full Panels and includes hardware necessary for channel and panel mounting. The Center Post is optional on double-door Half Panels and Swing Panel mounting and must be ordered separately. It attaches to the top and bottom channels making it adjustable along the depth of the enclosure. See illustration #5 on the Detail Sheet-page 186.

Notes: Dimensions are in inches. Millimeters shown are for reference only. Data subject to change without notice.

Free-Standing Enclosure Accessories
Type 4 Single-Door
Full and Half Swing Panel
Illustration Sheet and Catalog Number

Discount Schedule: C2
Subclass: DSD

Full Swing Panel (Single-Door)

Panel Catalog Number	Panel Size Height x Width A x B in.	mm	C in.	mm	Fits Enclosure Height x Width in.	mm
AF6024SWP	47.87 x 18.75	1216 x 476	23.12	587	60.00 x 24.00	1524 x 610
AF6036SWP	47.87 x 30.75	1216 x 781	23.12	587	60.00 x 36.00	1524 x 914
AF7224SWP	59.87 x 18.75	1521 x 476	29.12	740	72.00 x 24.00	1829 x 610
AF7230SWP	59.87 x 24.75	1521 x 629	29.12	740	72.00 x 30.00	1829 x 762
AF7236SWP	59.87 x 30.75	1521 x 781	29.12	740	72.00 x 36.00	1829 x 914

Half Swing Panel (Single-Door)

Panel Catalog Number	Panel Size Height x Width A x B in.	mm	C in.	mm	Fits Enclosure Height x Width in.	mm
AF6024HSWP	47.87 x 18.75	1216 x 476	23.12	587	60.00 x 24.00	1524 x 610
AF6036HSWP	47.87 x 30.75	1216 x 781	23.12	587	60.00 x 36.00	1524 x 914
AF7224HSWP	59.87 x 18.75	1521 x 476	29.12	740	72.00 x 24.00	1829 x 610
AF7230HSWP	59.87 x 24.75	1521 x 629	29.12	740	72.00 x 30.00	1829 x 762
AF7236HSWP	59.87 x 30.75	1521 x 781	29.12	740	72.00 x 36.00	1829 x 914

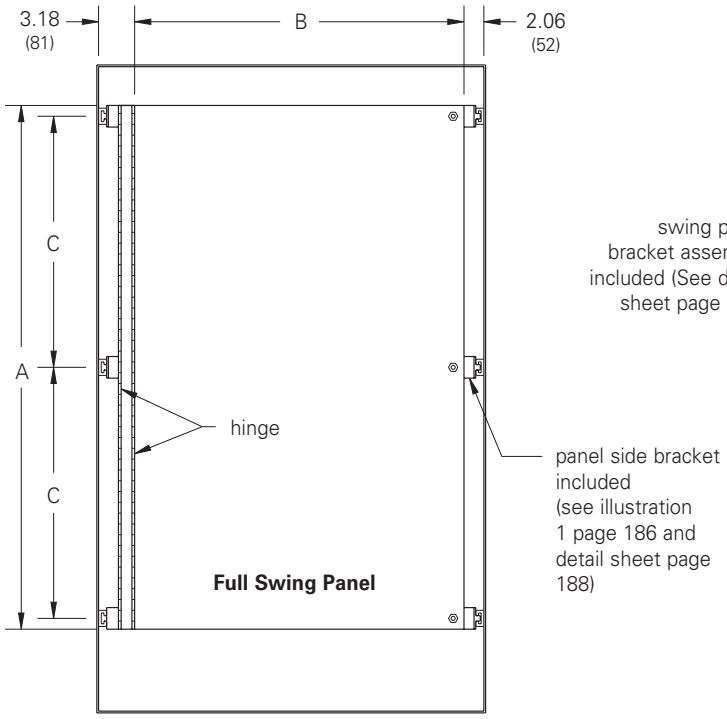

Full Swing Panel Mounting

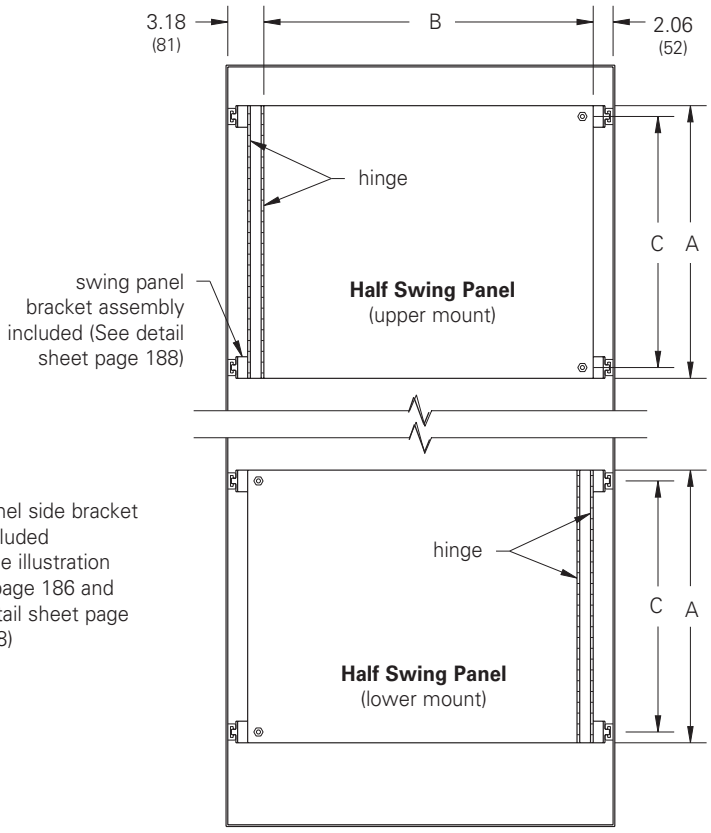

Half Swing Panel Mounting

Note: Full Swing Panel and Half Swing Panel for single-door, single and dual-access enclosures are (12) gauge steel, have a dual hinge swing panel bracket and furnished with Panel Brackets and all hardware necessary for channel and panel mounting. Panels can be installed so they hinge on either the left or right side. In addition, Half Panels can be mounted in either the upper or lower portion of the enclosure. Free-standing design permits the panel to be adjustable along the depth of the enclosure. The dual hinge will allow the inner panel to swing completely out of the door opening when within 5.50 inches of the front. With dual-access enclosures, Full and Half Swing Panels can be mounted back-to-back.

Notes: Dimensions are in inches. Millimeters shown are for reference only. Data subject to change without notice.

Free-Standing Enclosure Accessories
Type 4 Double-Door
Full and Half Swing Panel
Illustration Sheet and Catalog Number

Discount Schedule: C2
Subclass: DSD

Full Swing Panel (Double-Door)

Panel Catalog Number	Panel Size Height x Width A x B in.	mm	C in.	mm	Fits Enclosure Height x Width in.	mm
AF6024SWP	47.87 x 18.75	1216 x 476	23.12	587	60.00 x 48.00	1524 x 1219
AF7224SWP	59.87 x 18.75	1521 x 476	29.12	740	72.00 x 48.00	1829 x 1219
AF7230SWP	59.87 x 24.75	1521 x 629	29.12	740	72.00 x 60.00	1829 x 1524
AF7236SWP	59.87 x 30.75	1521 x 781	29.12	740	72.00 x 72.00	1829 x 1829

Half Swing Panel (Double-Door)

Panel Catalog Number	Panel Size Height x Width A x B in.	mm	C in.	mm	Fits Enclosure Height x Width in.	mm
AF6024HSWP	24.75 x 18.75	629 x 476	23.12	587	60.00 x 48.00	1524 x 1219
AF7224HSWP	30.75 x 18.75	781 x 476	29.12	740	72.00 x 48.00	1829 x 1219
AF7230HSWP	30.75 x 24.75	781 x 629	29.12	740	72.00 x 60.00	1829 x 1524
AF7236HSWP	30.75 x 30.75	781 x 781	29.12	740	72.00 x 72.00	1829 x 1829

A Center Post assembly and Center Bracket must be ordered separately.

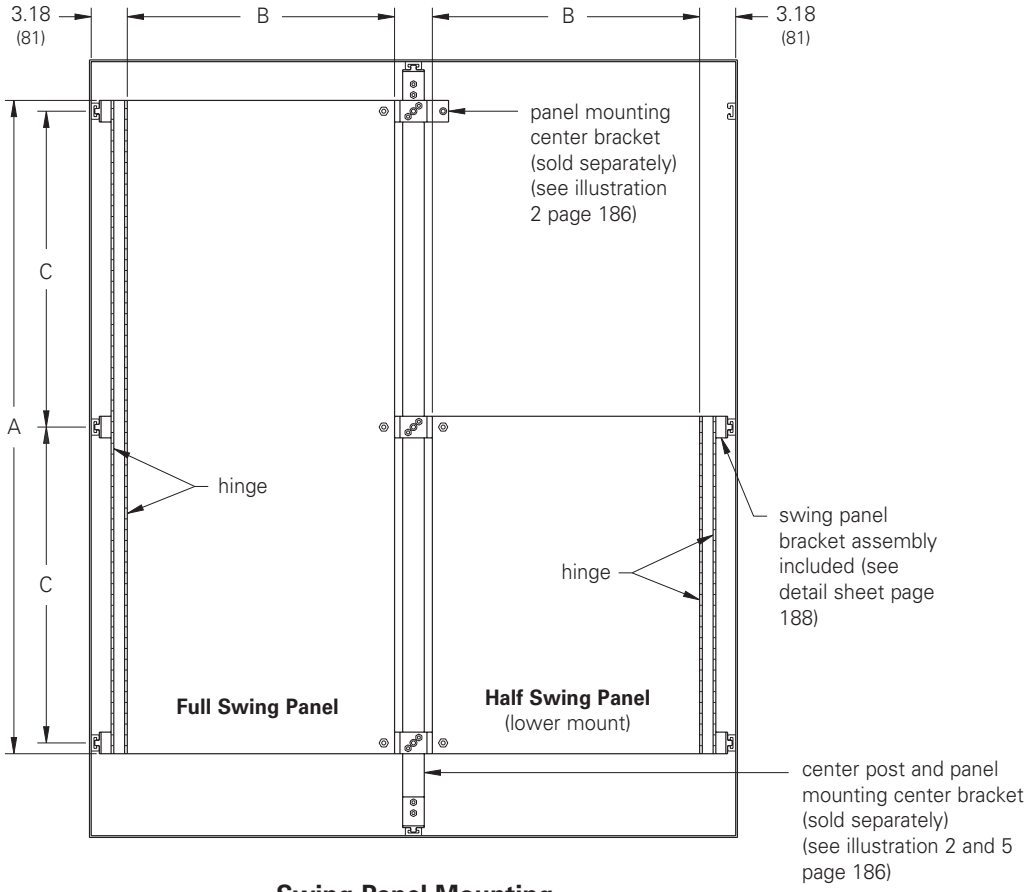

Swing Panel Mounting

Note: Full Swing Panel and Half Swing Panel for double-door, single and dual-access enclosures are (12) gauge steel, have a dual hinge swing panel bracket, and furnished with hardware necessary for side channel mounting. **A Center Post assembly and Center Bracket must be ordered separately.** Panels can be installed so they hinge either on the left or right side. In addition, Half Panels can be mounted in either the upper or lower portion of the enclosure. Free-standing design permits the panel to adjust along the depth of the enclosure. The dual hinge will allow the inner panel to swing completely out of the door opening when within 5.50 inches of the front. With dual-access enclosures, Full and Half Swing Panels can be mounted back-to-back.

Notes: Dimensions are in inches. Millimeters shown are for reference only. Data subject to change without notice.

Free-Standing Enclosure Accessories
Type 4
Miscellaneous Accessories
Illustration Sheet and Catalog Number

Discount Schedule: C2
Subclass: DS0

Miscellaneous Accessories

Catalog Number	Description	Illustration	Quantity
AFSBRKT1	Panel mounting side bracket	1	1
AFCBRKT3	Panel mounting center bracket	2	3
AFCMH3	Channel mounting hardware	3	3
AFPSUP2	Double-door panel support bracket	4	2

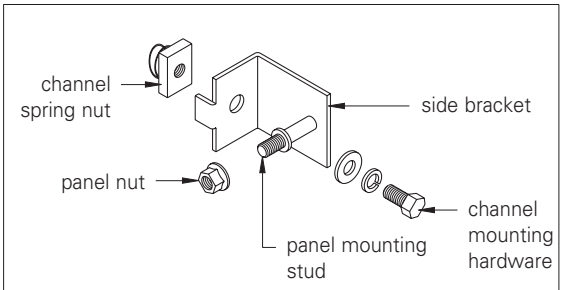

Illustration 1

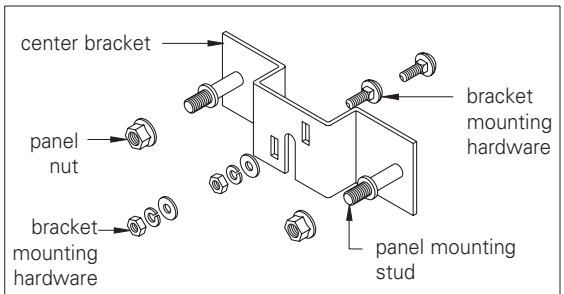

Illustration 2

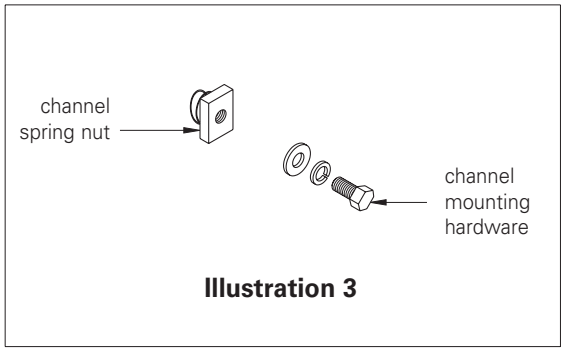

Illustration 3

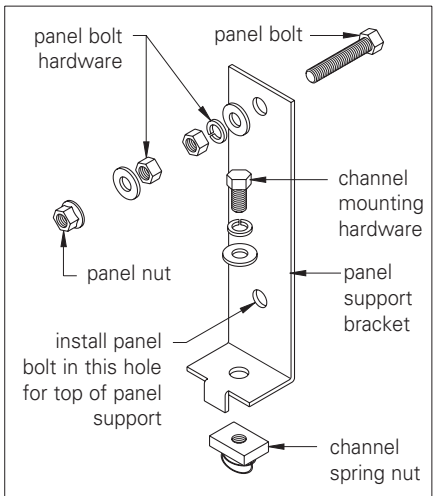

Illustration 4

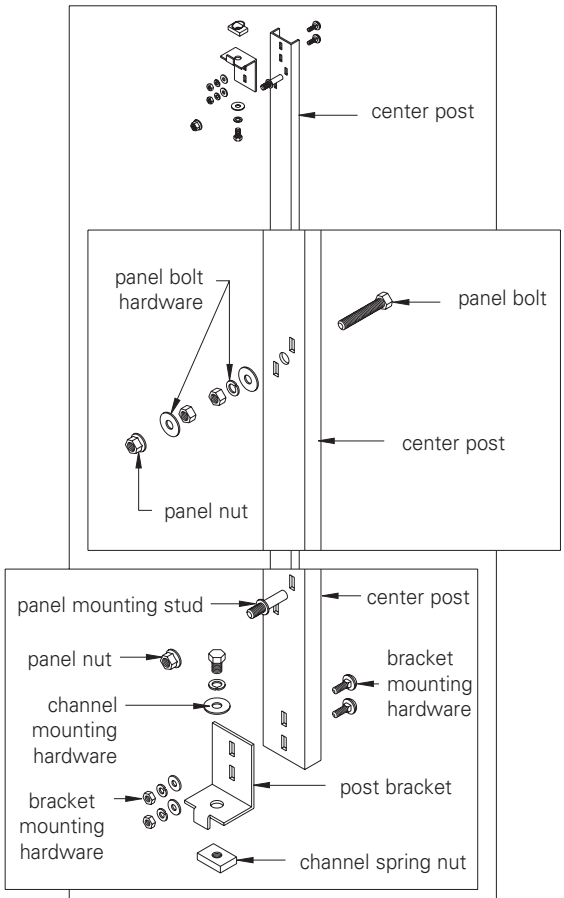

Illustration 5
See catalog number page 183

Notes: Dimensions are in inches. Millimeters shown are for reference only. Data subject to change without notice.

Free-Standing Enclosure Details
Type 4
Panel and Enclosure
Detail Sheet

Discount Schedule: C2
Subclass: DSD

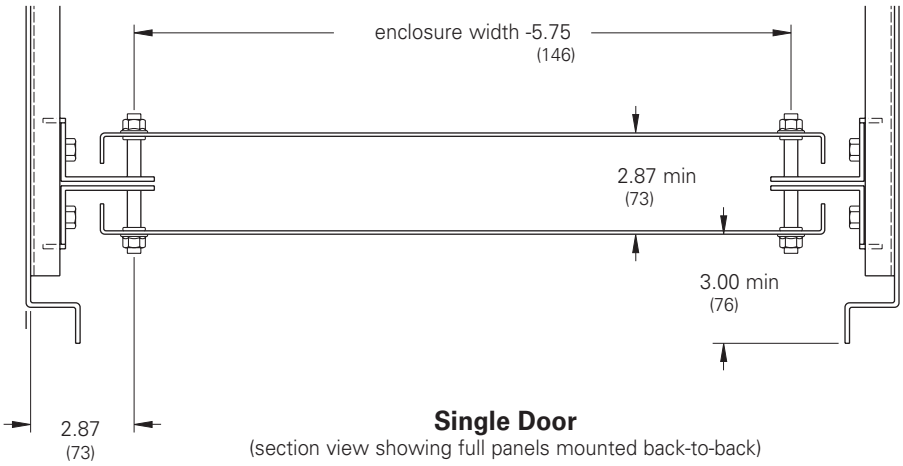

Single Door
(section view showing full panels mounted back-to-back)

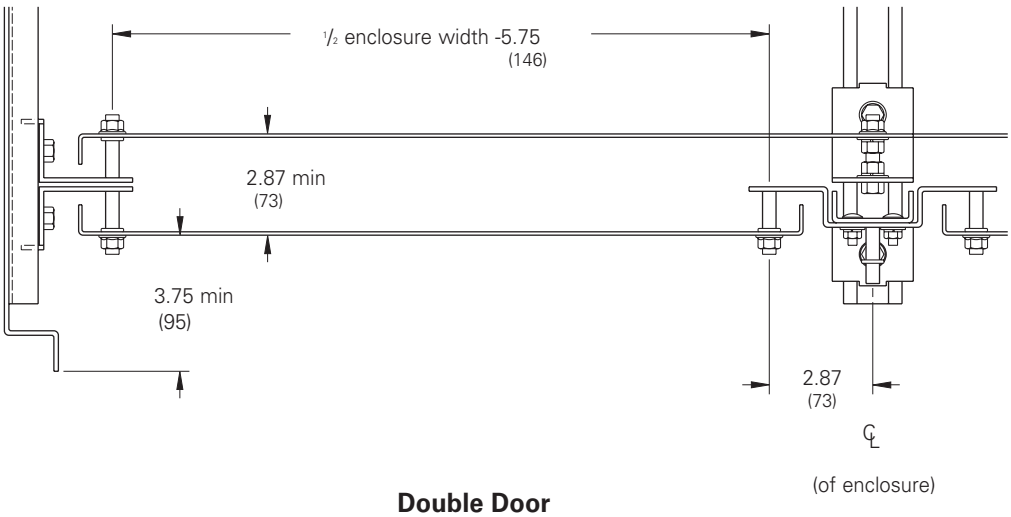

Double Door
(section view showing full panels mounted back-to-back)

Notes: Dimensions are in inches. Millimeters shown are for reference only. Data subject to change without notice.

Free-Standing Enclosure Details
Type 4
Swing Panel and Enclosure
Detail Sheet

Discount Schedule: C2
Subclass: DSD

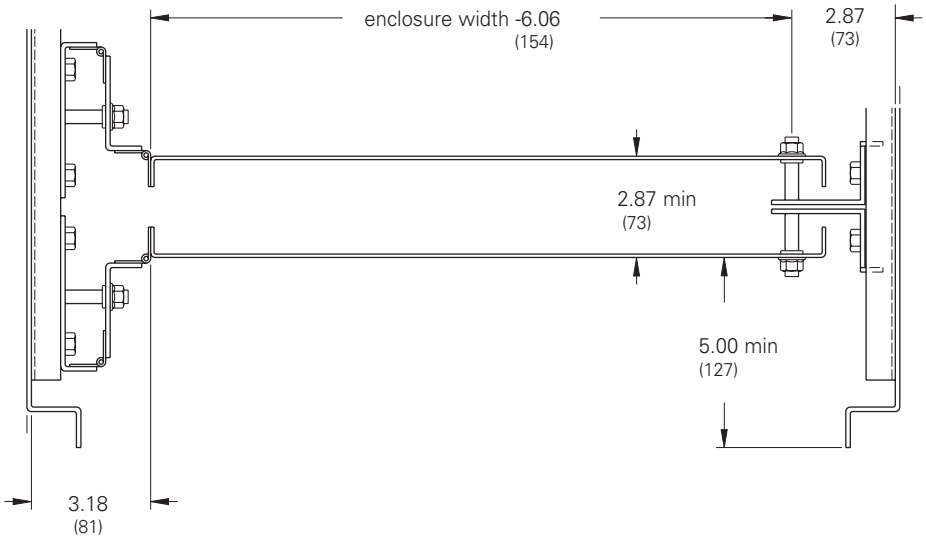

Single Door
(section view showing swing panels mounted back-to-back)

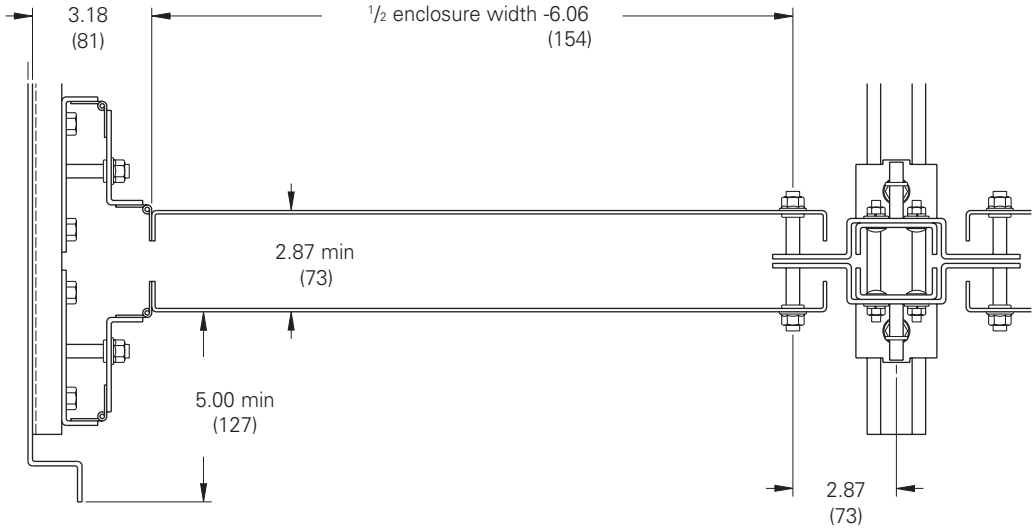

Double Door
(section view showing swing panels mounted back-to-back)

℄
(of enclosure)

Notes: Dimensions are in inches. Millimeters shown are for reference only. Data subject to change without notice.

Free-Standing Enclosure Accessories
Rack Mounting Angles
Illustration Sheet and Catalog Number

Discount Schedule: C2
Subclass: DS0

Heavy Duty Rack Mounting Angles are designed for mounting 19" (482mm) equipment in free-standing enclosures. **A Center Post Assembly, "AFxxCPS" on page 183, and a Panel Mounting Center Bracket, "AFCBRKT3" on page 186, (each sold separately) are required when mounting in any double door enclosure.** Mounting holes are spaced at the 19" "EIA" Standard and are provided to accept #10-32, #12-24, or M6 cage nuts (sold in packages of 100), on page 190.

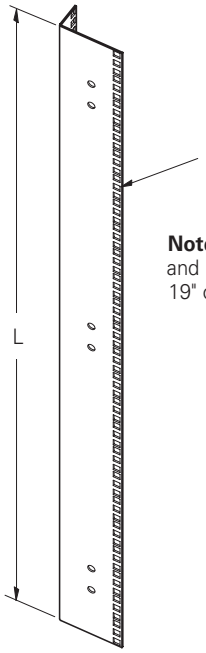

Note: L-shaped angles are universal and can be rotated to accommodate 19" or 23" EIA mounting equipment.

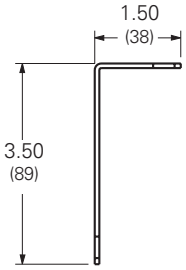

Angle Profile

'L' Shaped Mounting Angles

Catalog Number	Fits Enclosure Height in.	Fits Enclosure Height mm	L in.	L mm	Mounting U's
ES-48RMA-L	48	1219	42.00	1067	24
ES-60RMA-L	60	1524	54.25	1378	31
ES-72RMA-L	72	1829	66.50	1689	38
ES-90RMA-L	90	2286	78.75	2000	45

Kit contains two (2) full length 'L' angles, installation instructions, and hardware necessary to mount in single-door enclosures. Yellow Zinc finish.

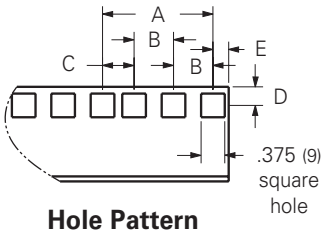

Hole Pattern

A = 1.75 (44)
B = .625 (16)
C = .500 (13)
D = .295 (7)
E = .250 (6)

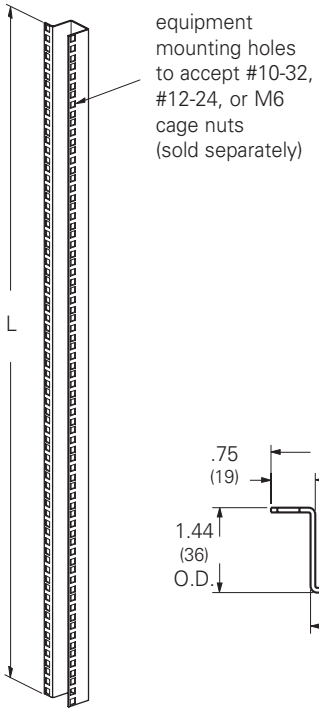

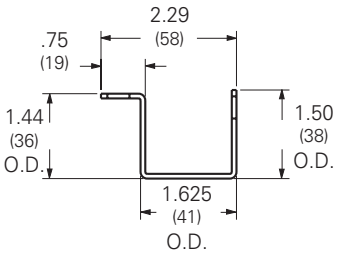

'U' Shaped Mounting Angles

Catalog Number	Fits Enclosure Height in.	Fits Enclosure Height mm	L in.	L mm	Mounting U's
ES-48RMA-U	48	1219	42.00	1067	24
ES-60RMA-U	60	1524	54.25	1378	31
ES-72RMA-U	72	1829	66.50	1689	38
ES-90RMA-U	90	2286	78.75	2000	45

Kit contains two (2) full length 'U' angles, installation instructions, and hardware necessary to mount in single-door enclosures. Yellow Zinc finish.

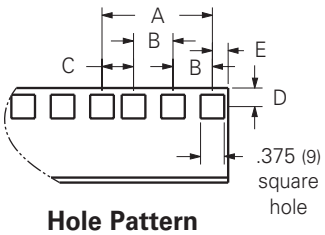

Hole Pattern

A = 1.75 (44)
B = .625 (16)
C = .500 (13)
D = .295 (7)
E = .250 (6)

Notes: Dimensions are in inches. Millimeters shown are for reference only. Data subject to change without notice.

Free-Standing Enclosure Accessories
Frames & Fasteners
Illustration Sheet and Catalog Number

Discount Schedule: C2
Subclass: DS0

Swing-Out Rack Mounted Frame

Catalog Number	Fits Enclosure Height		L	
	in.	mm	in.	mm
ES-48SORMF	48	1219	36.91	937
ES-60SORMF	60	1524	49.16	1248
ES-72SORMF	72	1829	59.66	1515
ES-90SORMF	90	2286	77.18	1960

Heavy Duty Swing-Out Rack Mounting Frames are designed for mounting 19" (482mm) equipment in free standing enclosures. **A Center Post Assembly, "AFxxCPS" on page 183 and Panel Mounting Center Bracket, "AFCBRKT3" on page 186, (each sold separately) are required when mounting in any double door enclosure.** Mounting holes are spaced per the "EIA" Standard and are provided to accept #10-32, #12-24, or M6 cage nuts (sold in packages of 100). Swing-Out Rack Mounting frames have white powder coated finish.

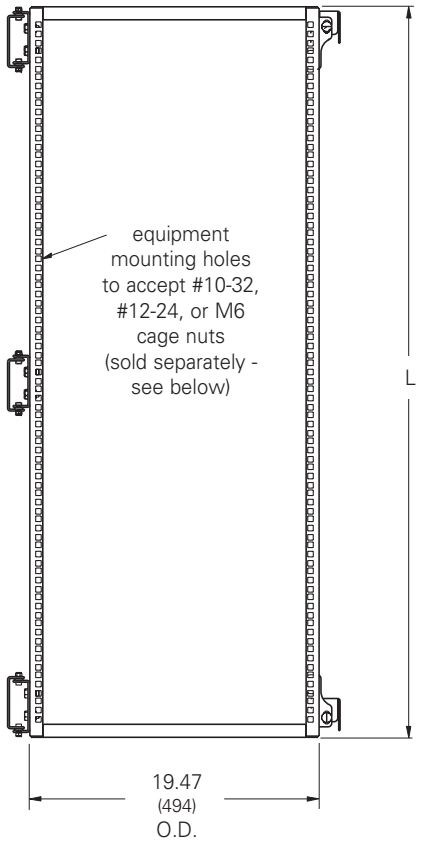

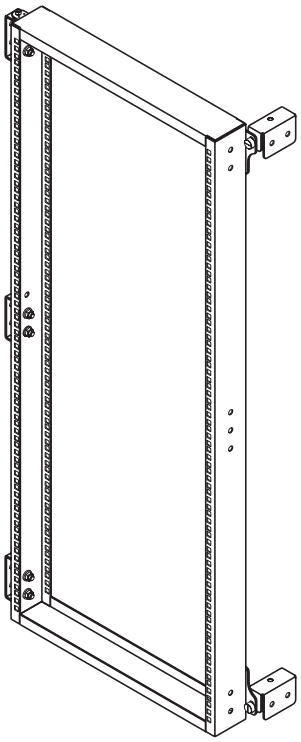

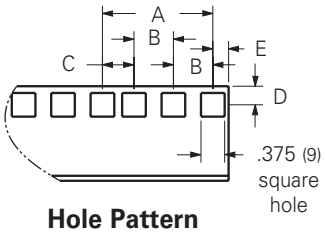

Hole Pattern

A = 1.75 (44)
B = .625 (16)
C = .500 (13)
D = .295 (7)
E = .250 (6)

Screws & Cage Nuts

Catalog Number	Description	Finish
Screws		
E2MA1032PHMS100	#10-32 Phillips	Clear Zinc
E2MA1224PHMS100	#12-24 Phillips	Clear Zinc
E2MAM6PHMS100	M6 Phillips	Yellow Zinc
Cage Nuts		
E2MACN1032100	#10-32 Threads	Clear Zinc
E2MACN1224100	#12-24 Threads	Clear Zinc
E2MACNM6100	M6 Threads	Yellow Zinc

Sold in bags of (100)

Screws

Cage Nuts

Notes: Dimensions are in inches. Millimeters shown are for reference only. Data subject to change without notice.

Free-Standing Enclosure Accessories
Floor Stand & Stabilizer Kits
Illustration Sheet and Catalog Number

Discount Schedule: C2
Subclass: DS0

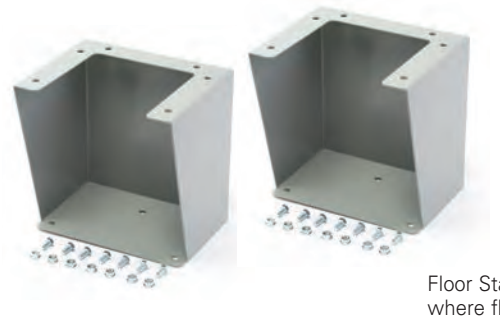

Floor Stand Kits

Catalog Number	A		B		C	
Steel	in.	mm	in.	mm	in.	mm
MFK12	12.0	305	10.06	256	—	—
MFK16	16.0	406	14.06	357	—	—
MFK18	18.0	457	16.06	408	7.00	178
MFK20	20.0	508	18.06	459	8.00	203
MFK24	24.0	610	22.06	560	10.00	254

Floor Stand Kits are intended for use with EnviroShield™ Type 4X, Type 4 and Type 12 Enclosures where floor support is required. Each kit consists of two (10) gauge legs and hardware for mounting. At the base of each leg is a prepunched plate (see drawing). Steel kits have a gray polyester powder paint finish. Stainless steel kits are fabricated from 304 stainless steel. Standard Floor Stand Kits are 12 inches (305 mm) high. For special heights, special material or non-standard construction consult the factory.

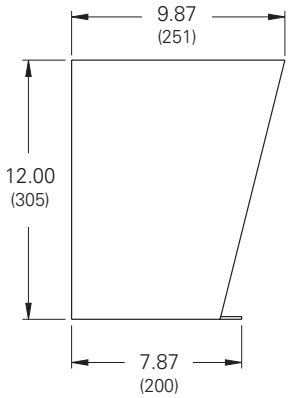

Floor Stand Kit

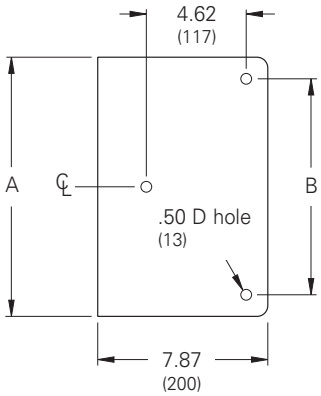

Base 12 - 16 Deep

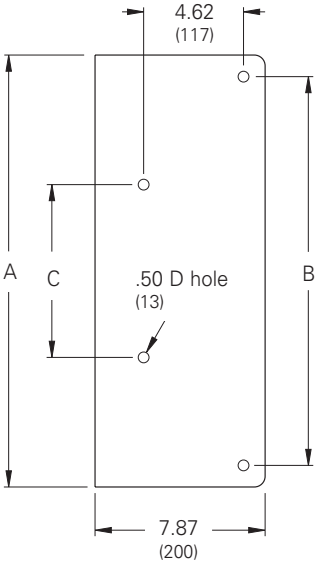

Base 18 - 24 Deep

Notes: Dimensions are in inches. Millimeters shown are for reference only. Data subject to change without notice.

JIC Enclosures Type 4X Lift-Off Cover 194-195
JIC Enclosures Type 4X Lift-Off Cover, Aluminum 196-197
JIC Enclosures Type 4X JIC Continuous Hinge Cover 198-199
JIC Enclosures Type 4X JIC Continuous Hinge Cover Aluminum 200-201
JIC Enclosures Type 4X JIC Continuous Hinge Cover Quarter-Turn Latches 202-203
Wall-Mount Enclosures Type 4X Single-Door 204-205
Wall-Mount Enclosures Type 4X Single-Door, Aluminum 206-207
Wall-Mount Enclosures Type 4X Premier™ Quarter-Turn Latches 208-211
Premier™ Series Accessories 212-217
Wall-Mount Enclosures Type 4X Single-Door 3-Point Locking 218-219
Wall-Mount Enclosures Type 4X Double-Door 3-Point Locking 220-221
Ground-Mount Enclosures Type 4X Double-Door Floor Standing 222-223
Ground-Mount Enclosures Type 4X Double-Door Floor-Standing Quarter-Turn Latches 224-225
Ground-Mount Enclosures Type 4X Double-Door Floor-Standing 3-Point Locking 226-227
Ground-Mount Enclosures Type 4X Single-Door Free-Standing 228-229
Ground-Mount Enclosures Type 4X Single-Door Free-Standing Quarter-Turn Latches 230-231
Ground-Mount Enclosures Type 4X Single-Door Free-Standing 3-Point Locking 232-233
Ground-Mount Enclosures Type 4X Single-Door Dual Access Free-Standing 3-Point Locking 234-235
Ground-Mount Enclosures Type 4X Double-Door Free-Standing 3-Point Locking 236-237
Ground-Mount Enclosures Type 4X Double-Door Dual Access Free-Standing 3-Point Locking 238-239
Ground-Mount Enclosures Type 4X Multi-Door Free-Standing 3-Point Locking 239a-239d
Ground-Mount Enclosures Type 4X Double-Door EnviroShield™ Free-Standing 3-Point Locking 240-241
Free-Standing Enclosure Accessories 242-253

JIC Enclosures
Type 4X Lift-Off Cover
Data Sheet

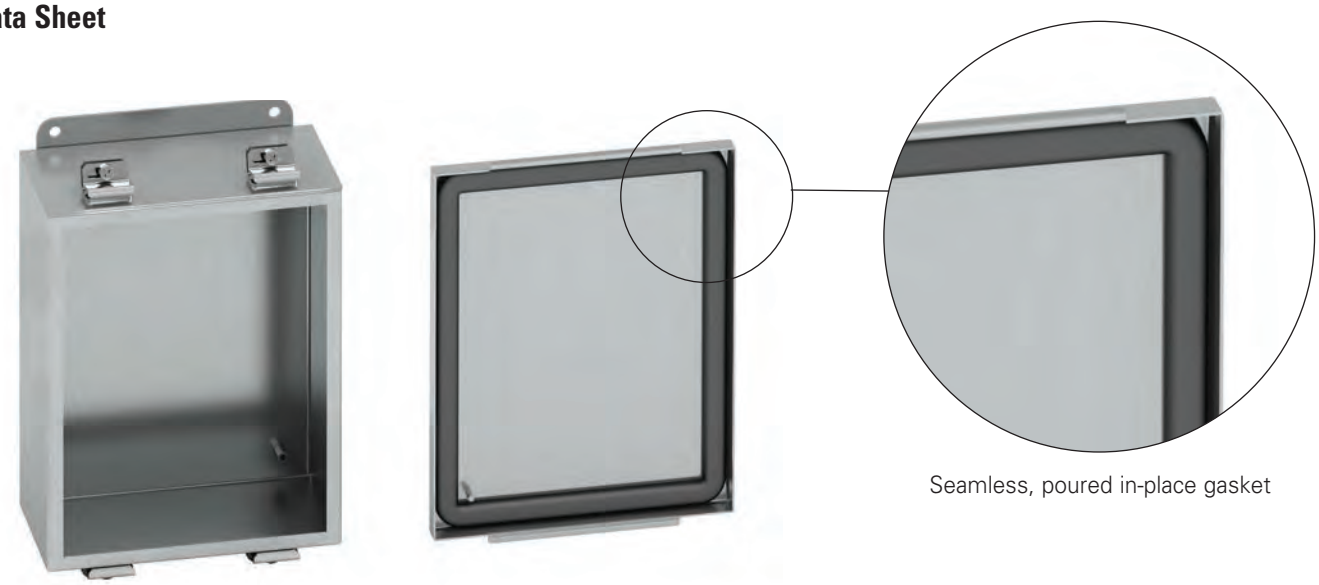

Application
- Houses electrical controls and instruments
- Intended for indoor or outdoor use where a corrosive environment exists
- Protects against corrosion, windblown dust and rain, splashing water and hose directed water

Standards
- UL 508A listed, Type 4X, Type 4, Type 12 and Type 13
- CSA C22.2 No.94 certified, Type 4X, Type 4, Type 12 and Type 13
- Conforms to NEMA standard for Type 4X, Type 4, Type 12 and Type 13

Finish
- Cover and sides of body have a smooth #4 brushed finish

Accessories
- Panels
- JIC terminal strap kit
- JIC terminal strip kit
- Terminal blocks
- See Accessories section

Construction
- Enclosure and cover are fabricated from (16) gauge, Type 304 or Type 316L stainless steel
- All continuous welded seams are finished smooth
- Cover is secured to the body with easy-to-operate stainless steel screw clamps mounted on all four sides
- Cover has a seamless poured in-place gasket
- #10-32 weld nuts are provided for mounting optional panel on 6" x 4" and larger enclosures
- Ground stud provided on cover
- External mounting feet are provided for secure wall mounting

Discount Schedule: C2

Subclass: DD0 (Type 304)
D10 (Type 316L)

Notes: We can provide special sizes, finishes and other modifications. Consult the factory for your special requirements.

JIC Enclosures
Type 4X Lift-Off Cover
Illustration Sheet and Catalog Number

Enclosure Catalog Number Stainless Steel		Enclosure Size Height x Width x Depth A x B x C		D		E		F		Panel Catalog Number		Panel Size Height x Width	
Type 304	Type 316L	in.	mm	in.	mm	in.	mm	in.	mm	Steel	Conductive	in.	mm
443-4XSLC	443-4XSS6LC	4.00 x 4.00 x 3.00	102 x 102 x 76	2.00	51	2.00	51	—	—	—	—	—	—
643-4XSLC	643-4XSS6LC	6.00 x 4.00 x 3.00	152 x 102 x 76	3.00	76	2.00	51	—	—	AW64P	AW64GP	4.87 x 2.87	124 x 73
664-4XSLC	664-4XSS6LC	6.00 x 6.00 x 4.00	152 x 152 x 102	3.00	76	3.00	76	—	—	AW66P	AW66GP	4.87 x 4.87	124 x 124
864-4XSLC	864-4XSS6LC	8.00 x 6.00 x 4.00	203 x 152 x 102	—	—	—	—	2.00	51	AW86P	AW86GP	6.87 x 4.87	174 x 124
884-4XSLC	884-4XSS6LC	8.00 x 8.00 x 4.00	203 x 203 x 102	—	—	—	—	2.00	51	AW88P	AW88GP	6.87 x 6.87	174 x 174
1084-4XSLC	1084-4XSS6LC	10.00 x 8.00 x 4.00	254 x 203 x 102	—	—	—	—	2.00	51	AW108P	AW108GP	8.87 x 6.87	225 x 174
12105-4XSLC	12105-4XSS6LC	12.00 x 10.00 x 5.00	305 x 254 x 127	—	—	—	—	3.00	76	AW1210P	AW1210GP	10.87 x 8.87	276 x 225
14126-4XSLC	14126-4XSS6LC	14.00 x 12.00 x 6.00	356 x 305 x 152	—	—	—	—	3.00	76	AW1412P	AW1412GP	12.87 x 10.87	327 x 276
16146-4XSLC	16146-4XSS6LC	16.00 x 14.00 x 6.00	406 x 356 x 152	—	—	—	—	3.00	38	AW1614P	AW1614GP	14.87 x 12.87	378 x 327

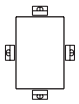

443-4XSLC
643-4XSLC
664-4XSLC

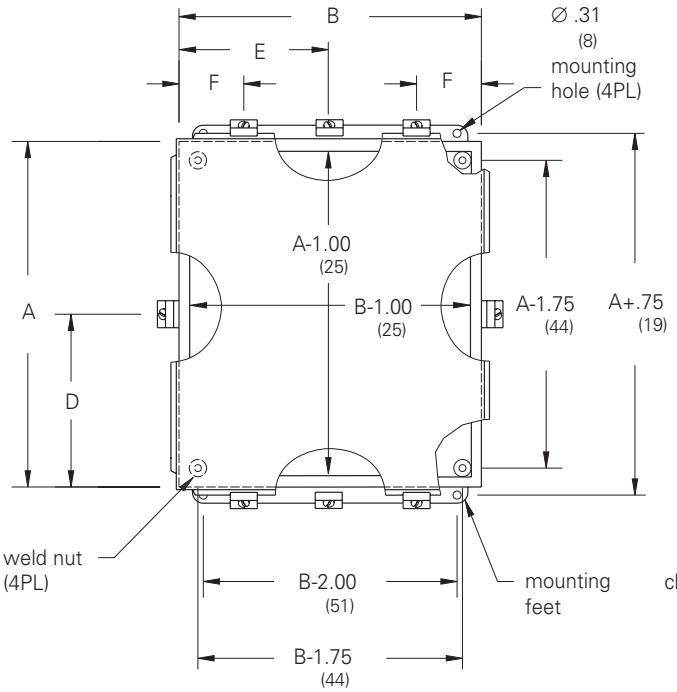

Front View

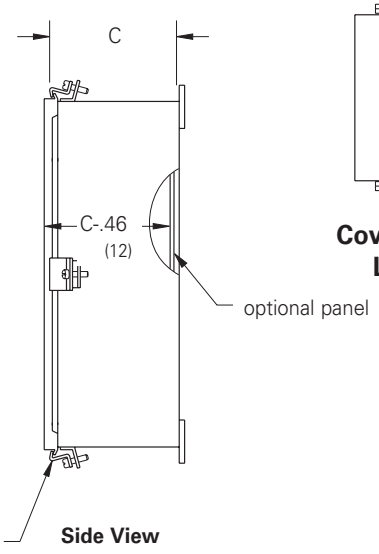

Side View

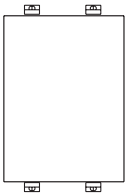

864-4XSLC
884-4XSLC
1084-4XSLC
12105-4XSLC
14126-4XSLC
16146-4XSLC

Cover Clamp Layout

Notes: Dimensions are in inches. Millimeters shown are for reference only. Data subject to change without notice.

JIC Enclosures
Type 4X Lift-Off Cover, Aluminum
Data Sheet

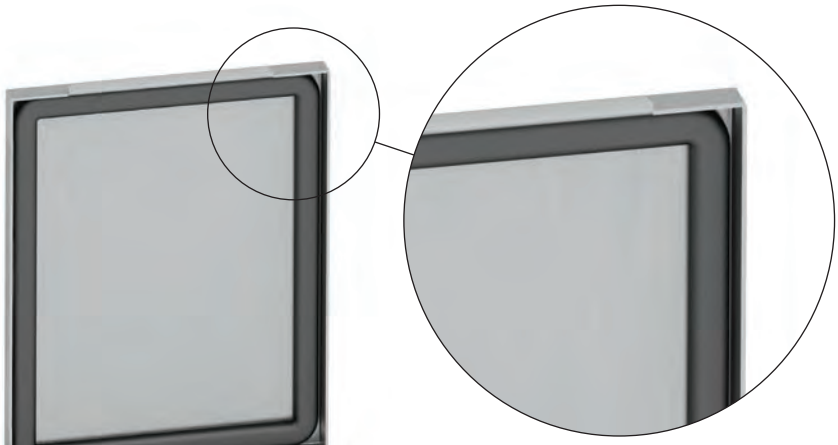

Seamless, poured in-place gasket

Application
- Houses electrical controls and instruments
- Intended for indoor or outdoor use where a corrosive environment exists
- Protects against corrosion, windblown dust and rain, splashing water and hose directed water

Standards
- UL 508A listed, Type 4, Type 4X, Type 12 and Type 13
- CSA C22.2 No.94 certified, Type 4, Type 4X, Type 12 and Type 13
- Conforms to NEMA standard for Type 4, Type 4X, Type 12 and Type 13

Finish
- Cover and sides of body have a smooth #4 brushed finish

Accessories
- Panels
- JIC terminal strap kit
- JIC terminal strip kit
- Terminal blocks
- See Accessories section

Construction
- Enclosure and cover are fabricated from (14) gauge, Type 5052-H32 aluminum
- All continuous welded seams are finished smooth
- Cover is secured to the body with easy-to-operate stainless steel screw clamps mounted on all four sides
- Each door has a print pocket and padlock hasp with sealing hole provision
- Cover has a seamless poured in-place gasket
- #10-32 weld nuts are provided for mounting optional panel on 6" x 4" and larger enclosures
- External mounting feet are provided for secure wall mounting

Discount Schedule: C2

Subclass: DDA

Notes: We can provide special sizes, finishes and other modifications. Consult the factory for your special requirements.

JIC Enclosures
Type 4X Lift-Off Cover, Aluminum
Illustration Sheet and Catalog Number

Enclosure Catalog Number	Enclosure Size Height x Width x Depth A x B x C in.	mm	D in.	mm	E in.	mm	F in.	mm	Panel Catalog Number Steel	Conductive	Panel Size Height x Width in.	mm
443-4XALC	4.00 x 4.00 x 3.00	102 x 102 x 76	2.00	51	2.00	51	—	—	—	—	—	—
643-4XALC	6.00 x 4.00 x 3.00	152 x 102 x 76	3.00	76	2.00	51	—	—	AW64P	AW64GP	4.87 x 2.87	124 x 73
664-4XALC	6.00 x 6.00 x 4.00	152 x 152 x 102	3.00	76	3.00	76	—	—	AW66P	AW66GP	4.87 x 4.87	124 x 124
864-4XALC	8.00 x 6.00 x 4.00	203 x 152 x 102	—	—	—	—	2.00	51	AW86P	AW86GP	6.87 x 4.87	174 x 124
884-4XALC	8.00 x 8.00 x 4.00	203 x 203 x 102	—	—	—	—	2.00	51	AW88P	AW88GP	6.87 x 6.87	174 x 174
1084-4XALC	10.00 x 8.00 x 4.00	254 x 203 x 102	—	—	—	—	2.00	51	AW108P	AW108GP	8.87 x 6.87	225 x 174
12105-4XALC	12.00 x 10.00 x 5.00	305 x 254 x 127	—	—	—	—	3.00	76	AW1210P	AW1210GP	10.87 x 8.87	276 x 225
14126-4XALC	14.00 x 12.00 x 6.00	356 x 305 x 152	—	—	—	—	3.00	76	AW1412P	AW1412GP	12.87 x 10.87	327 x 276
16146-4XALC	16.00 x 14.00 x 6.00	406 x 356 x 152	—	—	—	—	3.00	76	AW1614P	AW1614GP	14.87 x 12.87	378 x 327

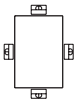

443-4XALC
643-4XALC
664-4XALC

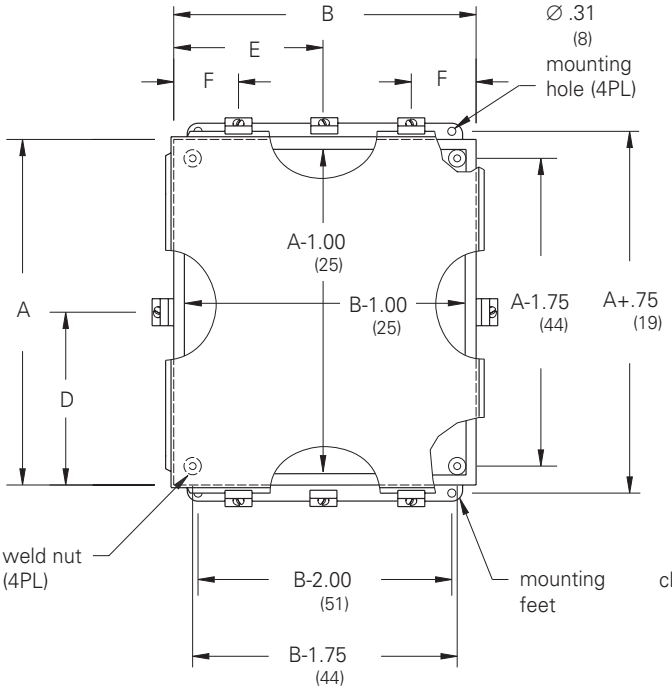

Front View

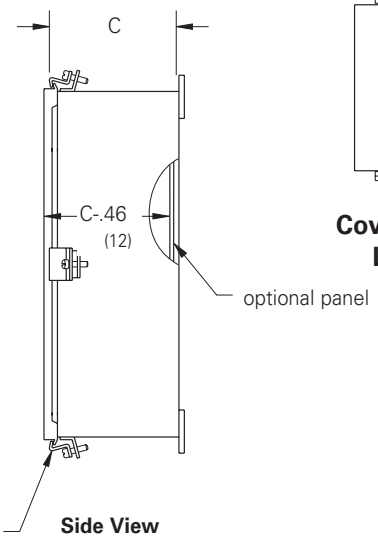

Side View

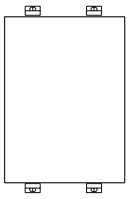

864-4XALC
884-4XALC
1084-4XALC
12105-4XALC
14126-4XALC
16146-4XALC

Cover Clamp Layout

Notes: Dimensions are in inches. Millimeters shown are for reference only. Data subject to change without notice.

JIC Enclosures
Type 4X Continuous Hinge Cover
Data Sheet

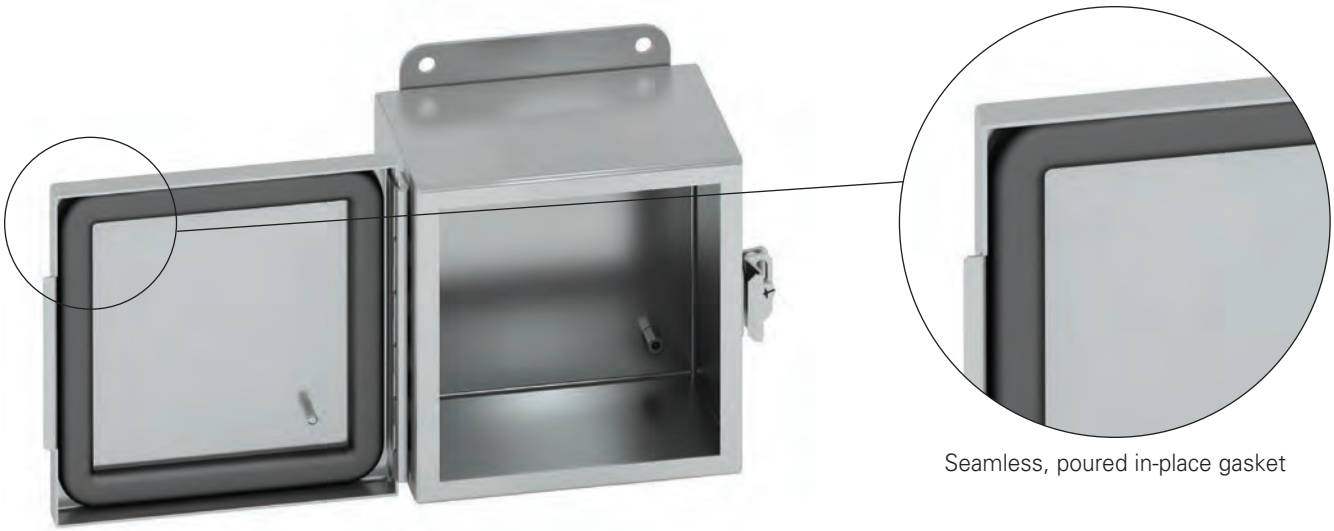

Seamless, poured in-place gasket

Application
- Houses electrical controls and instruments
- Intended for indoor or outdoor use where a corrosive environment exists
- Protects against corrosion, windblown dust and rain, splashing water and hose directed water

Standards
- UL 508A listed, Type 4, Type 4X, Type 12 and Type 13
- CSA C22.2 No.94 certified, Type 4, Type 4X, Type 12 and Type 13
- Conforms to NEMA standard for Type 4, Type 4X, Type 12 and Type 13

Finish
- Cover and sides of body have a smooth #4 brushed finish

Accessories
- Panels
- JIC terminal strap kit
- JIC terminal strip kit
- Terminal blocks
- See Accessories section

Construction
- Enclosure and cover are fabricated from (16) gauge, Type 304 or Type 316L stainless steel
- All continuous welded seams are finished smooth
- Cover is secured to the body with a stainless steel continuous hinge and pin on one side and easy-to-operate stainless steel screw clamps mounted to the opposite side
- Cover has a seamless poured in-place gasket
- Ground stud provided on cover
- #10-32 weld nuts are provided for mounting optional panel
- External mounting feet are provided for secure wall mounting

Discount Schedule: C2

Subclass: DD0 (Type 304)
D10 (Type 316L)

Notes: We can provide special sizes, finishes and other modifications. Consult the factory for your special requirements.

JIC Enclosures
Type 4X Continuous Hinge Cover
Illustration Sheet and Catalog Number

Enclosure Catalog Number Stainless Steel		Enclosure Size Height x Width x Depth A x B x C		D		E		Panel Catalog Number		Panel Size Height x Width	
Type 304	Type 316L	in.	mm	in.	mm	in.	mm	Steel	Conductive	in.	mm
644-4XSCHC	644-4XSS6CHC	6.00 x 4.00 x 4.00	152 x 102 x 102	—	—	3.00	76	AW64P	AW64GP	4.87 x 2.87	124 x 73
664-4XSCHC	664-4XSS6CHC	6.00 x 6.00 x 4.00	152 x 152 x 102	—	—	3.00	76	AW66P	AW66GP	4.87 x 4.87	124 x 124
864-4XSCHC	864-4XSS6CHC	8.00 x 6.00 x 4.00	203 x 152 x 102	2.00	51	—	—	AW86P	AW86GP	6.87 x 4.87	174 x 124
884-4XSCHC	884-4XSS6CHC	8.00 x 8.00 x 4.00	203 x 203 x 102	2.00	51	—	—	AW88P	AW88GP	6.87 x 6.87	174 x 174
1084-4XSCHC	1084-4XSS6CHC	10.00 x 8.00 x 4.00	254 x 203 x 102	2.00	51	—	—	AW108P	AW108GP	8.87 x 6.87	225 x 174
12106-4XSCHC	12106-4XSS6CHC	12.00 x 10.00 x 6.00	305 x 254 x 152	3.00	76	—	—	AW1210P	AW1210GP	10.87 x 8.87	276 x 225
12126-4XSCHC	12126-4XSS6CHC	12.00 x 12.00 x 6.00	305 x 305 x 152	3.00	76	—	—	AW1212P	AW1212GP	10.87 x 10.87	276 x 276
14126-4XSCHC	14126-4XSS6CHC	14.00 x 12.00 x 6.00	356 x 305 x 152	3.00	76	—	—	AW1412P	AW1412GP	12.87 x 10.87	327 x 276
16146-4XSCHC	16146-4XSS6CHC	16.00 x 14.00 x 6.00	406 x 356 x 152	3.00	76	—	—	AW1614P	AW1614GP	14.87 x 12.87	376 x 327

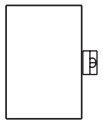

644-4XSCHC
664-4XSCHC

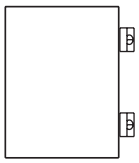

864-4XSCHC
884-4XSCHC
1084-4XSCHC
12106-4XSCHC
12126-4XSCHC
14126-4XSCHC
16146-4XSCHC

Cover Clamp Layout

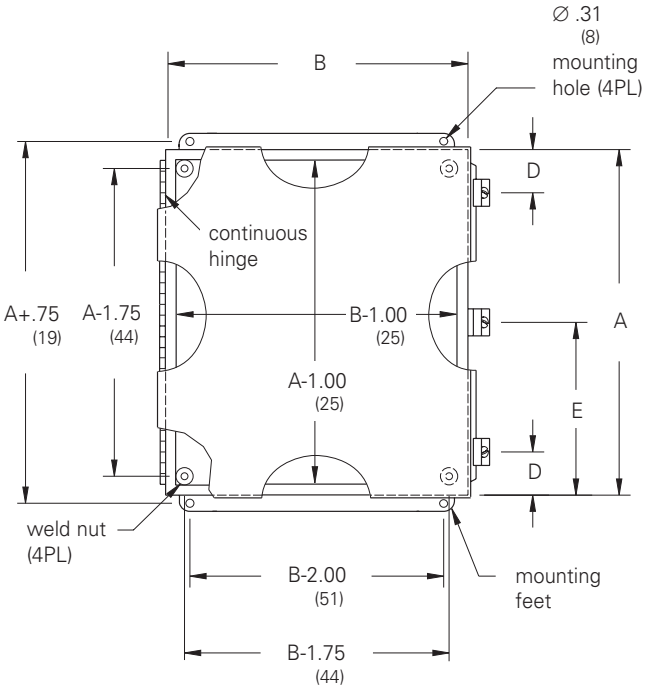

Front View

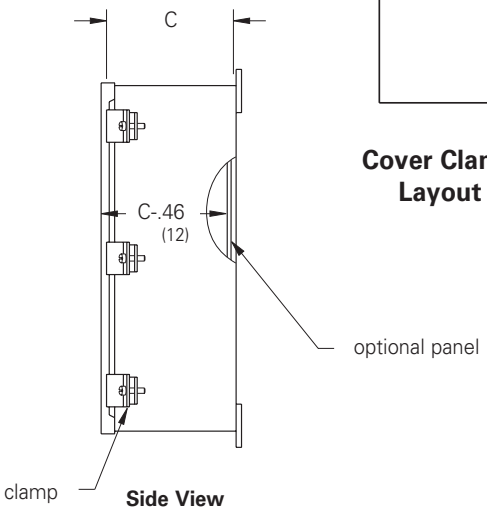

Side View

Notes: Dimensions are in inches. Millimeters shown are for reference only. Data subject to change without notice.

JIC Enclosures
Type 4X Continuous Hinge Cover, Aluminum
Data Sheet

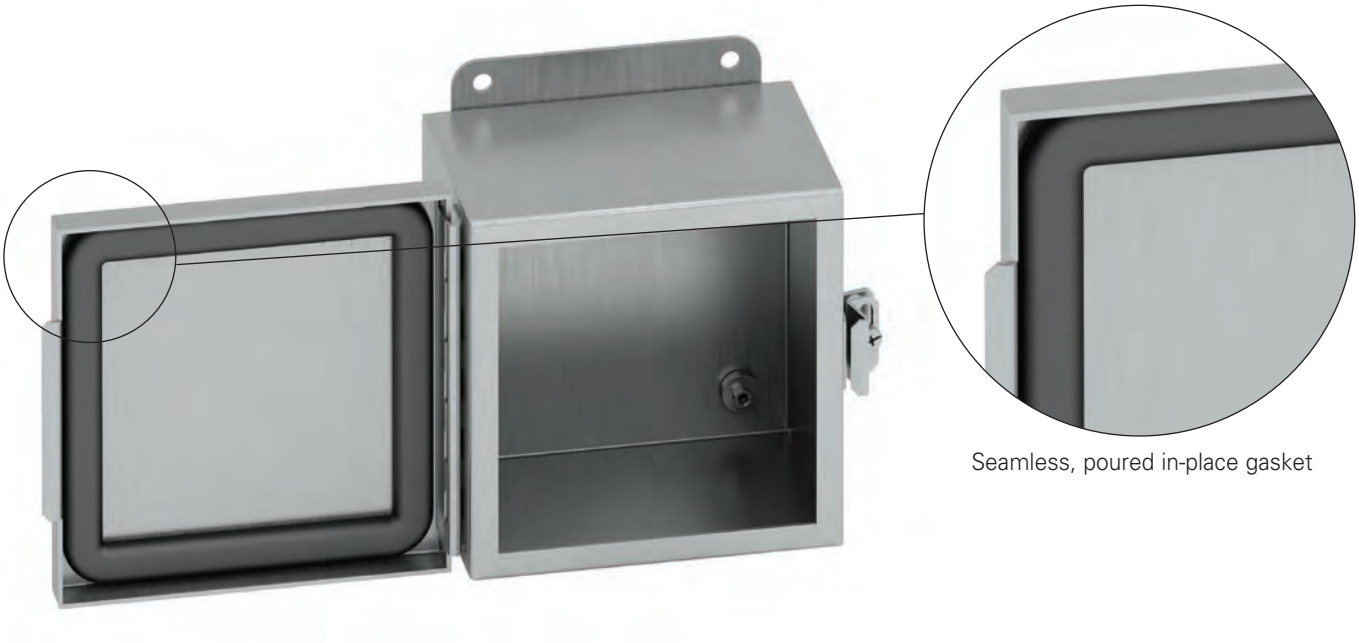

Application
- Houses electrical controls and instruments
- Intended for indoor or outdoor use where a corrosive environment exists
- Protects against corrosion, windblown dust and rain, splashing water and hose directed water

Standards
- UL 508A listed, Type 4, Type 4X, Type 12 and Type 13
- CSA C22.2 No.94 certified, Type 4, Type 4X, Type 12 and Type 13
- Conforms to NEMA standard for Type 4, Type 4X, Type 12 and Type 13

Finish
- Cover and sides of body have a smooth #4 brushed finish

Accessories
- Panels
- JIC terminal strap kit
- JIC terminal strip kit
- Terminal blocks
- See Accessories section

Construction
- Enclosure and cover are fabricated from (14) gauge, Type 5052-H32 aluminum
- All continuous welded seams are finished smooth
- Cover is secured to the body with an aluminum continuous hinge and pin on one side and easy-to-operate stainless steel screw clamps mounted to the opposite side
- Cover has a seamless poured in-place gasket
- #10-32 weld nuts are provided for mounting optional panel
- External mounting feet are provided for secure wall mounting

Discount Schedule: C2

Subclass: DDA

Notes: We can provide special sizes, finishes and other modifications. Consult the factory for your special requirements.

JIC Enclosures
Type 4X Continuous Hinge Cover, Aluminum
Illustration Sheet and Catalog Number

Enclosure Catalog Number	Enclosure Size Height x Width x Depth A x B x C in.	mm	D in.	mm	E in.	mm	Panel Catalog Number Steel	Conductive	Panel Size Height x Width in.	mm
644-4XACHC	6.00 x 4.00 x 4.00	152 x 102 x 102	—	—	3.00	76	**AW64P**	**AW64GP**	4.87 x 2.87	124 x 73
664-4XACHC	6.00 x 6.00 x 4.00	152 x 152 x 102	—	—	3.00	76	**AW66P**	**AW66GP**	4.87 x 4.87	124 x 124
864-4XACHC	8.00 x 6.00 x 4.00	203 x 152 x 102	2.00	51	—	—	**AW86P**	**AW86GP**	6.87 x 4.87	174 x 124
1084-4XACHC	10.00 x 8.00 x 4.00	254 x 203 x 102	2.00	51	—	—	**AW108P**	**AW108GP**	8.87 x 6.87	225 x 174
12106-4XACHC	12.00 x 10.00 x 6.00	305 x 254 x 152	3.00	76	—	—	**AW1210P**	**AW1210GP**	10.87 x 8.87	276 x 225
12126-4XACHC	12.00 x 12.00 x 6.00	305 x 305 x 152	3.00	76	—	—	**AW1212P**	**AW1212GP**	10.87 x 10.87	276 x 276
14126-4XACHC	14.00 x 12.00 x 6.00	356 x 305 x 152	3.00	76	—	—	**AW1412P**	**AW1412GP**	12.87 x 10.87	327 x 276
16146-4XACHC	16.00 x 14.00 x 6.00	406 x 356 x 152	3.00	76	—	—	**AW1614P**	**AW1614GP**	14.87 x 12.87	378 x 327

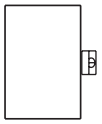

644-4XACHC
664-4XACHC

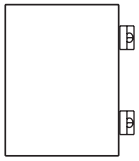

864-4XACHC
1084-4XACHC
12106-4XACHC
12126-4XACHC
14126-4XACHC
16146-4XACHC

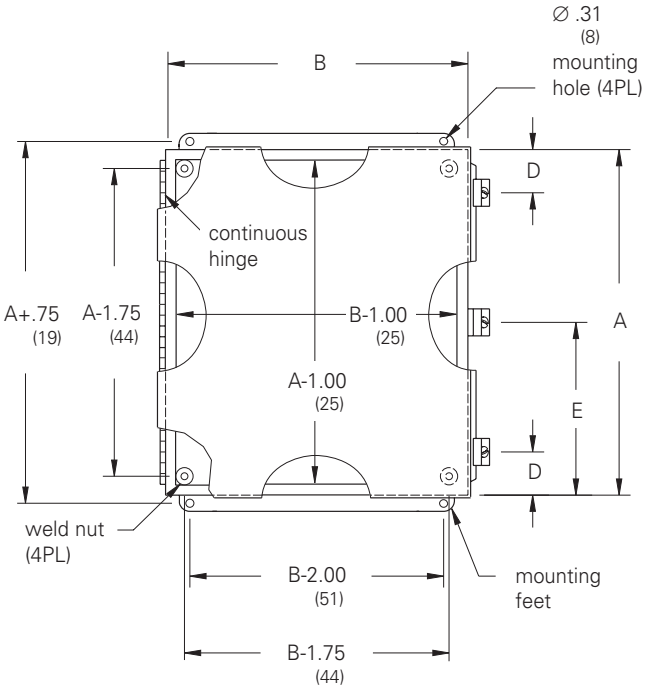

Front View

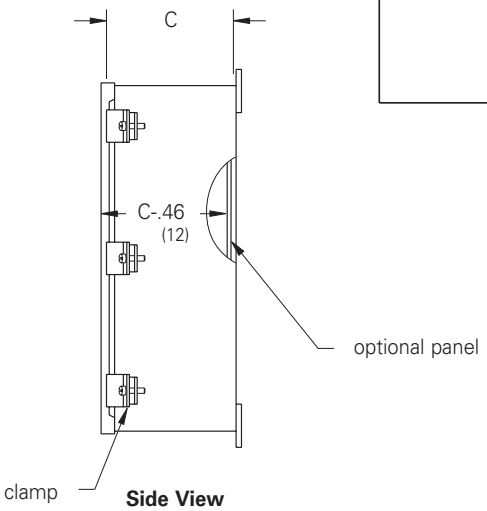

Side View

Notes: Dimensions are in inches. Millimeters shown are for reference only. Data subject to change without notice.

JIC Enclosures
Type 4X Continuous Hinge Cover with Quarter-Turn Latches
Data Sheet

Application
- Houses electrical controls and instruments
- Intended for indoor or outdoor use where a corrosive environment exists
- Protects against windblown dust and rain, splashing water and hose directed water

Standards
- UL 508A Listed, Type 3R, Type 4, Type 4X, Type 12
- CSA C22.2 No.94 certified, Type 3R, Type 4, Type 4X, Type 12
- Conforms to NEMA Standards for Type 3, Type 3R, Type 4, Type 4X, Type 12

Finish
- Cover and sides of body have a smooth #4 brushed finish

Accessories
- Panels
- Swing-out panel kits
- JIC terminal kits
- Window kits
- Locks and latches

Construction
- Enclosure and cover are fabricated from (16) gauge stainless steel
- All continuous welded seams are finished smooth
- Stainless steel continuous hinge and pin
- Slotted quarter-turn flush latch(es)
- Cover has a seamless poured in-place gasket
- Ground stud provided on cover
- #10-32 weld nuts are provided for mounting optional panel
- External mounting feet

Discount Schedule: C2

Subclass: DD0

Notes: We can provide special sizes, finishes and other modifications. Consult the factory for your special requirements.

JIC Enclosures
Type 4X Continuous Hinge Cover with Quarter-Turn Latches
Illustration Sheet and Catalog Number

Enclosure Catalog Number	Enclosure Size Height x Width x Depth A x B x C in.	mm	D in.	mm	E in.	mm	Panel Catalog Number Steel	Conductive	Panel Size Height x Width in.	mm
644-4XSQT	6.00 x 4.00 x 4.00	152 x 102 x 102	—	—	3.00	76	AW64P	AW64GP	4.87 x 2.87	124 x 73
664-4XSQT	6.00 x 6.00 x 4.00	152 x 152 x 102	—	—	3.00	76	AW66P	AW66GP	4.87 x 4.87	124 x 124
863.5-4XSQT	8.00 x 6.00 x 3.50	203 x 152 x 89	—	—	4.00	101	AW86P	AW86GP	6.87 x 4.87	174 x 124
864-4XSQT	8.00 x 6.00 x 4.00	203 x 152 x 102	—	—	4.00	101	AW86P	AW86GP	6.87 x 4.87	174 x 124
1084-4XSQT	10.00 x 8.00 x 4.00	254 x 203 x 102	—	—	5.00	127	AW108P	AW108GP	8.87 x 6.87	225 x 174
12105-4XSQT	12.00 x 10.00 x 5.00	305 x 254 x zzz	3.00	76	—	—	AW1210P	AW1210GP	10.87 x 8.87	276 x 225
866-4XSQT	8.00 x 6.00 x 6.00	203 x 152 x 152	—	—	4.00	101	AW86P	AW86GP	6.87 x 4.87	174 x 124
1086-4XSQT	10.00 x 8.00 x 6.00	254 x 203 x 152	—	—	5.00	127	AW108P	AW108GP	8.87 x 6.87	225 x 174
12126-4XSQT	12.00 x 12.00 x 6.00	305 x 305 x 152	3.00	76	—	—	AW1212P	AW1212GP	10.87 x 10.87	276 x 276
14126-4XSQT	14.00 x 12.00 x 6.00	355 x 305 x 152	3.00	76	—	—	AW1412P	AW1412GP	12.87 x 10.87	327 x 276
16146-4XSQT	16.00 x 14.00 x 6.00	406 x 355 x 152	3.00	76	—	—	AW1614P	AW1614GP	14.87 x 12.87	377 x 327
12108-4XSQT	12.00 x 10.00 x 8.00	305 x 254 x 203	3.00	76	—	—	AW1210P	AW1210GP	10.87 x 8.87	276 x 225
14128-4XSQT	14.00 x 12.00 x 8.00	355 x 305 x 203	3.00	76	—	—	AW1412P	AW1412GP	12.87 x 10.87	327 x 276
161410-4XSQT	16.00 x 14.00 x 10.00	406 x 355 x 254	3.00	76	—	—	AW1614P	AW1614GP	14.87 x 12.87	377 x 327

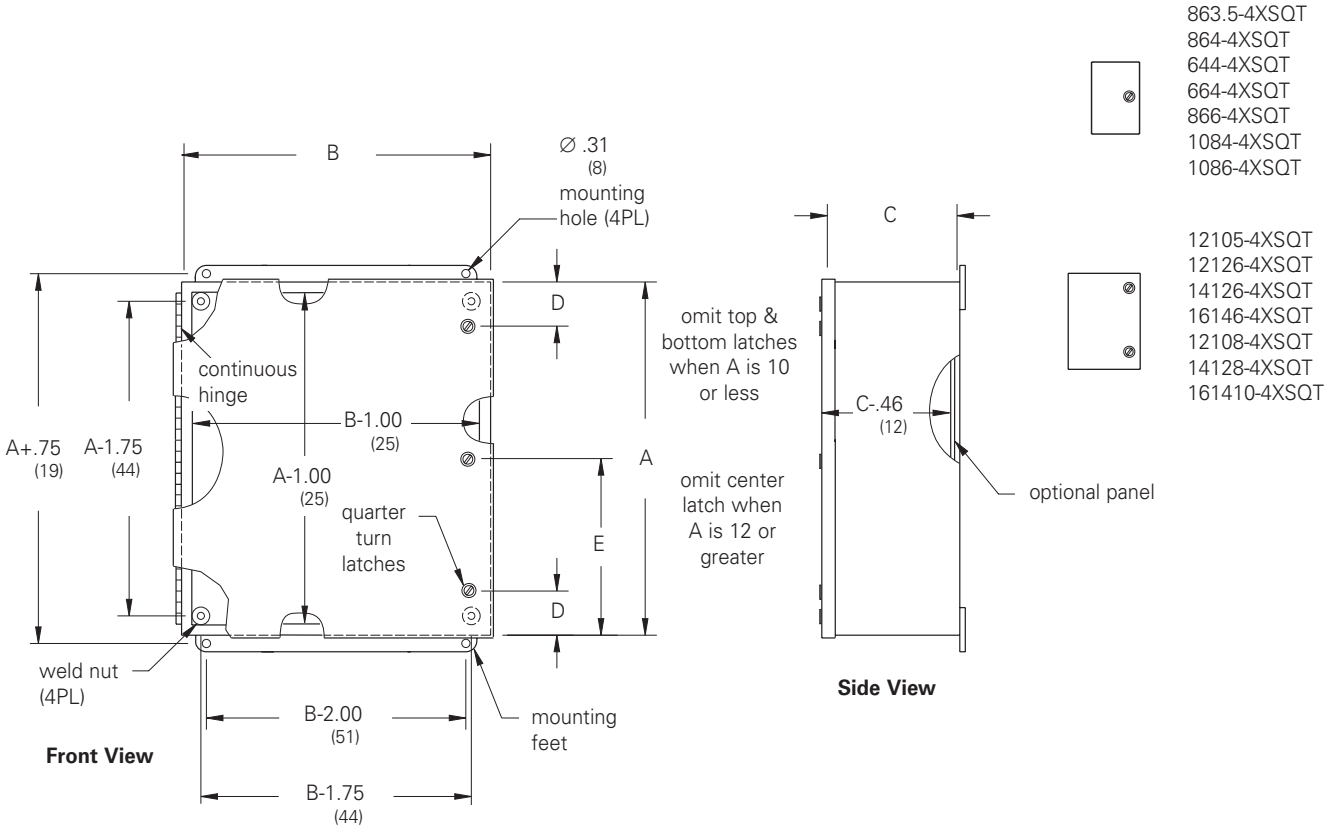

Notes: Dimensions are in inches. Millimeters shown are for reference only. Data subject to change without notice.

Wall-Mount Enclosures
Type 4X Single-Door
Data and Illustration Sheet

Application
- Houses electrical controls and instruments
- Intended for indoor or outdoor use where a corrosive environment exists
- Protects against corrosion, windblown dust and rain, splashing water and hose directed water

Standards
- UL 508A listed, Type 4, Type 4X, Type 12 and Type 13
- CSA C22.2 No.94 certified, Type 4, Type 4X, Type 12 and Type 13
- Conforms to NEMA standard for Type 4, Type 4X, Type 12 and Type 13

Construction
- Enclosure and door are fabricated from (14) gauge, Type 304 or Type 316L stainless steel
- All continuous welded seams are finished smooth
- Doors are secured to the body with a heavy-duty, stainless steel continuous hinge and pin on one side and easy to release stainless steel door clamps mounted to the other three sides
- Each door has a padlock hasp with sealing hole provision
- Print pocket provided
- Door has a seamless poured in-place gasket
- Ground stud provided on door and body
- Formed lip around enclosure opening diverts liquids and contaminants
- .375-16 collar studs are provided for mounting optional panel
- External mounting feet are provided for secure wall mounting

Finish
- Door and sides of body have a smooth #4 brushed finish

Accessories
- Panels
- NEMA terminal strap kit
- Terminal blocks
- Floor stand kit
- See Accessories section

Discount Schedule: C2

Subclass: DG0 (Type 304)
D00 (Type 316L)

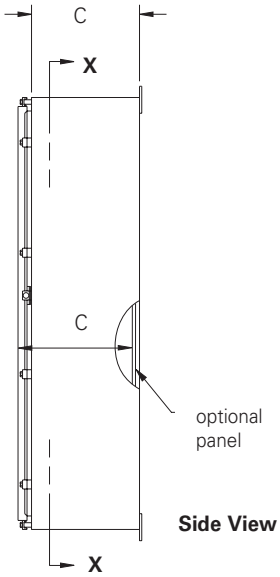

Side View

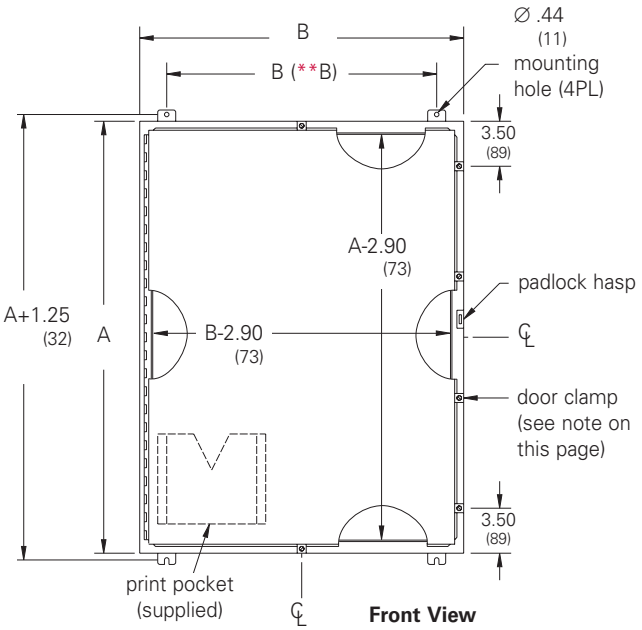

Front View

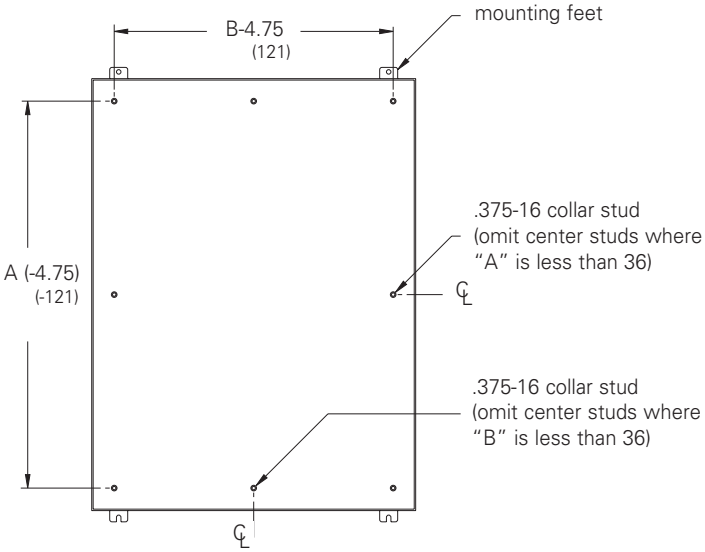

Section X-X

Notes: Dimensions: **B = (-2.50) if 12 inches wide; (-6.00) if wider than 12 inches.
We can provide special sizes, finishes and other modifications. Consult the factory for your special requirements.

Wall-Mount Enclosures
Type 4X Single-Door
Catalog Number

Enclosure Catalog Number Stainless Steel		Enclosure Size Height x Width x Depth A x B x C		Panel Catalog Number		Panel Size Height x Width	
Type 304	Type 316L	in.	mm	Steel	Conductive	in.	mm
16126-4XS	16126-4XSS6	16.00 x 12.00 x 6.00	406 x 305 x 152	AW1612P	AW1612GP	13.00 x 9.00	330 x 229
16166-4XS	16166-4XSS6	16.00 x 16.00 x 6.00	406 x 406 x 152	AW1616P	AW1616GP	13.00 x 13.00	330 x 330
16206-4XS	16206-4XSS6	16.00 x 20.00 x 6.00	406 x 508 x 152	AW2016P	AW2016GP	17.00 x 13.00	432 x 330
20166-4XS	20166-4XSS6	20.00 x 16.00 x 6.00	208 x 406 x 152	AW2016P	AW2016GP	17.00 x 13.00	432 x 330
20206-4XS	20206-4XSS6	20.00 x 20.00 x 6.00	508 x 508 x 152	AW2020P	AW2020GP	17.00 x 17.00	432 x 432
24126-4XS	24126-4XSS6	24.00 x 12.00 x 6.00	610 x 305 x 152	AW2412P	—	21.00 x 9.00	533 x 229
24166-4XS	24166-4XSS6	24.00 x 16.00 x 6.00	610 x 406 x 152	AW2416P	AW2416GP	21.00 x 13.00	533 x 330
24206-4XS	24206-4XSS6	24.00 x 20.00 x 6.00	610 x 508 x 152	AW2420P	AW2420GP	20.87 x 16.87	530 x 428
24246-4XS	24246-4XSS6	24.00 x 24.00 x 6.00	610 x 610 x 152	AW2424P	AW2424GP	20.87 x 20.87	530 x 530
30246-4XS	30246-4XSS6	30.00 x 24.00 x 6.00	762 x 610 x 152	AW3024P	AW3024GP	26.87 x 20.87	682 x 530
36246-4XS	36246-4XSS6	36.00 x 24.00 x 6.00	914 x 610 x 152	AW3624P	AW3624GP	32.87 x 20.87	835 x 530
16128-4XS	16128-4XSS6	16.00 x 12.00 x 8.00	406 x 305 x 203	AW1612P	AW1612GP	13.00 x 9.00	330 x 229
20168-4XS	20168-4XSS6	20.00 x 16.00 x 8.00	508 x 406 x 203	AW2016P	AW2016GP	17.00 x 13.00	432 x 330
20208-4XS	20208-4XSS6	20.00 x 20.00 x 8.00	508 x 508 x 203	AW2020P	AW2020GP	17.00 x 17.00	432 x 432
20248-4XS	20248-4XSS6	20.00 x 24.00 x 8.00	508 x 610x203	AW2420P	AW2420GP	32.87 x 26.87	835 x 682
24168-4XS	24168-4XSS6	24.00 x 16.00 x 8.00	610 x 406 x 203	AW2416P	AW2416GP	21.00 x 13.00	533 x 330
24208-4XS	24208-4XSS6	24.00 x 20.00 x 8.00	610 x 508 x 203	AW2420P	AW2420GP	20.87 x 16.87	530 x 428
24248-4XS	24248-4XSS6	24.00 x 24.00 x 8.00	610 x 610 x 203	AW2424P	AW2424GP	20.87 x 20.87	530 x 530
24308-4XS	24308-4XSS6	24.00 x 30.00 x 8.00	610 x 762 x 203	AW3024P	AW3024GP	26.87 x 20.87	682 x 530
30208-4XS	30208-4XSS6	30.00 x 20.00 x 8.00	762 x 508 x 203	AW3020P	AW3020GP	26.87 x 16.87	682 x 428
30248-4XS	30248-4XSS6	30.00 x 24.00 x 8.00	762 x 610 x 203	AW3024P	AW3024GP	26.87 x 20.87	682 x 530
30308-4XS	30308-4XSS6	30.00 x 30.00 x 8.00	762 x 762 x 203	AW3030P	AW3030GP	26.87 x 26.87	682 x 682
36248-4XS	36248-4XSS6	36.00 x 24.00 x 8.00	914 x 610 x 203	AW3624P	AW3624GP	32.87 x 20.87	835 x 530
36308-4XS	36308-4XSS6	36.00 x 30.00 x 8.00	914 x 762 x 203	AW3630P	AW3630GP	32.87 x 26.87	835 x 682
42308-4XS	42308-4XSS6	42.00 x 30.00 x 8.00	1067 x 762 x 203	AW4230P	AW4230GP	38.87 x 26.87	987 x 682
42368-4XS	42368-4XSS6	42.00 x 36.00 x 8.00	1067 x 914 x 203	AW4236P	AW4236GP	38.87 x 32.87	987 x 835
48368-4XS	48368-4XSS6	48.00 x 36.00 x 8.00	1219 x 914 x 203	AW4836P	AW4836GP	44.87 x 32.87	1140 x 835
201610-4XS	201610-4XSS6	20.00 x 16.00 x 10.00	508 x 406 x 254	AW2016P	AW2016GP	17.00 x 13.00	432 x 330
242010-4XS	242010-4XSS6	24.00 x 20.00 x 10.00	610 x 508 x 254	AW2420P	AW2420GP	20.87 x 16.87	530 x 428
302410-4XS	302410-4XSS6	30.00 x 24.00 x 10.00	762 x 610 x 254	AW3024P	AW3024GP	26.87 x 20.87	682 x 530
362410-4XS	362410-4XSS6	36.00 x 24.00 x 10.00	914 x 610 x 254	AW3624P	AW3624GP	32.87 x 20.87	835 x 530
363010-4XS	363010-4XSS6	36.00 x 30.00 x 10.00	914 x 762 x 254	AW3630P	AW3630GP	32.87 x 26.87	835 x 682
423010-4XS	423010-4XSS6	42.00 x 30.00 x 10.00	1067 x 762 x 254	AW4230P	AW4230GP	38.87 x 26.87	987 x 682
483010-4XS	483010-4XSS6	48.00 x 30.00 x 10.00	1219 x 762 x 254	AW4830P	AW4830GP	44.87 x 26.87	1140 x 682
483610-4XS	483610-4XSS6	48.00 x 36.00 x 10.00	1219 x 914 x 254	AW4836P	AW4836GP	44.87 x 32.87	1140 x 835
603610-4XS	603610-4XSS6	60.00 x 36.00 x 10.00	1524 x 914 x 254	AW6036P	AW6036GP	56.87 x 32.87	1444 x 835
242412-4XS	242412-4XSS6	24.00 x 24.00 x 12.00	610 x 610 x 305	AW2424P	AW2424GP	20.87 x 20.87	530 x 530
302412-4XS	302412-4XSS6	30.00 x 24.00 x 12.00	762 x 610 x 305	AW3024P	AW3024GP	26.87 x 20.87	682 x 530
363012-4XS	363012-4XSS6	36.00 x 30.00 x 12.00	914 x 762 x 305	AW3630P	AW3630GP	32.87 x 26.87	835 x 682
363612-4XS	363612-4XSS6	36.00 x 36.00 x 12.00	914 x 914 x 305	AW3636P	—	32.87 x 32.87	835 x 835
483612-4XS	483612-4XSS6	48.00 x 36.00 x 12.00	1219 x 914 x 305	AW4836P	AW4836GP	44.87 x 32.87	1140 x 835
603612-4XS	603612-4XSS6	60.00 x 36.00 x 12.00	1524 x 914 x 305	AW6036P	AW6036GP	56.87 x 32.87	1444 x 835
302416-4XS	302416-4XSS6	30.00 x 24.00 x 16.00	762 x 610 x 406	AW3024P	AW3024GP	26.87 x 20.87	682 x 530
363016-4XS	363016-4XSS6	36.00 x 30.00 x 16.00	914 x 762 x 406	AW3630P	AW3630GP	32.87 x 26.87	835 x 682
483616-4XS	483616-4XSS6	48.00 x 36.00 x 16.00	1219 x 914 x 406	AW4836P	AW4836GP	44.87 x 32.87	1140 x 835
603616-4XS	603616-4XSS6	60.00 x 36.00 x 16.00	1524 x 914 x 406	AW6036P	AW6036GP	56.87 x 32.87	1444 x 835

Notes: Clamps are mounted along three sides of the enclosure door. Spacing between clamps along side opposite the hinge does not exceed 15 inches. Dimensions are in inches. Millimeters shown are for reference only. Data subject to change without notice.

Wall-Mount Enclosures
Type 4X Single-Door, Aluminum
Data Sheet and Catalog Number

Application
- Houses electrical controls and instruments
- Intended for indoor or outdoor use where a corrosive environment exists
- Protects against corrosion, windblown dust and rain, splashing water and hose directed water

Standards
- UL 508A listed, Type 4, Type 4X, Type 12 and Type 13
- CSA C22.2 No.94 certified, Type 4, Type 4X, Type 12 and Type 13
- Conforms to NEMA standard for Type 4, Type 4X, Type 12 and Type 13

Finish
- Door and sides of body have a smooth #4 brushed finish

Accessories
- Panels
- NEMA terminal strap kit
- Terminal blocks
- Floor stand kit
- See Accessories section

Construction
- Enclosure and door are fabricated from (14) gauge, Type 5052-H32 aluminum
- All continuous welded seams are finished smooth
- Doors are secured to the body with a heavy-duty, aluminum continuous hinge and pin on one side and easy to operate stainless steel door clamps mounted to the other three sides
- Each door has a padlock hasp with sealing hole provision
- Print pocket provided
- Door has a seamless poured in-place gasket
- Formed lip around enclosure opening diverts liquids and contaminants
- .375-16 collar studs are provided for mounting optional panel
- External mounting feet are provided for secure wall mounting

Discount Schedule: C2

Subclass: DGA

Enclosure	Enclosure Size Height x Width x Depth A x B x C		Panel Catalog Number		Panel Size Height x Width	
Catalog Number	in.	mm	Steel	Conductive	in.	mm
16126-4XA	16.00 x 12.00 x 6.00	406 x 305 x 152	AW1612P	AW1612GP	13.00 x 9.00	330 x 229
16166-4XA	16.00 x 16.00 x 6.00	406 x 406 x 152	AW1616P	AW1616GP	13.00 x 13.00	330 x 330
20166-4XA	20.00 x 16.00 x 6.00	508 x 406 x 152	AW2016P	AW2016GP	17.00 x 13.00	432 x 330
20206-4XA	20.00 x 20.00 x 6.00	508 x 508 x 152	AW2020P	AW2020GP	17.00 x 17.00	432 x 432
24206-4XA	24.00 x 20.00 x 6.00	610 x 508 x 152	AW2420P	AW2420GP	20.87 x 16.87	530 x 428
16128-4XA	16.00 x 12.00 x 8.00	406 x 305 x 203	AW1612P	AW1612GP	13.00 x 9.00	330 x 229
20168-4XA	20.00 x 16.00 x 8.00	508 x 406 x 203	AW2016P	AW2016GP	17.00 x 13.00	432 x 330
24168-4XA	24.00 x 16.00 x 8.00	610 x 406 x 203	AW2416P	AW2416GP	21.00 x 13.00	533 x 330
24208-4XA	24.00 x 20.00 x 8.00	610 x 508 x 203	AW2420P	AW2420GP	20.87 x 16.87	530 x 428
24248-4XA	24.00 x 24.00 x 8.00	610 x 610 x 203	AW2424P	AW2424GP	20.87 x 20.87	530 x 530
24308-4XA	24.00 x 30.00 x 8.00	610 x 762 x 203	AW3024P	AW3024GP	26.87 x 20.87	682 x 530
30208-4XA	30.00 x 20.00 x 8.00	762 x 508 x 203	AW3020P	AW3020GP	26.87 x 16.87	682 x 428
30248-4XA	30.00 x 24.00 x 8.00	762 x 610 x 203	AW3024P	AW3024GP	26.87 x 20.87	682 x 530
30308-4XA	30.00 x 30.00 x 8.00	762 x 762 x 203	AW3030P	AW3030GP	26.87 x 26.87	682 x 682
36248-4XA	36.00 x 24.00 x 8.00	914 x 610 x 203	AW3624P	AW3624GP	32.87 x 20.87	835 x 530
36308-4XA	36.00 x 30.00 x 8.00	914 x 762 x 203	AW3630P	AW3630GP	32.87 x 26.87	835 x 682
42368-4XA	42.00 x 36.00 x 8.00	1067 x 914 x 203	AW4236P	AW4236GP	38.87 x 32.87	987 x 835
48368-4XA	48.00 x 36.00 x 8.00	1219 x 914 x 203	AW4836P	AW4836GP	44.87 x 32.87	1140 x 835

Notes: We can provide special sizes, finishes and other modifications. Consult the factory for your special requirements.

Wall-Mount Enclosures
Type 4X Single-Door, Aluminum
Illustration Sheet and Catalog Number

Enclosure	Enclosure Size Height x Width x Depth A x B x C		Panel Catalog Number		Panel Size Height x Width	
Catalog Number	in.	mm	Steel	Conductive	in.	mm
201610-4XA	20.00 x 16.00 x 10.00	508 x 406 x 254	AW2016P	AW2016GP	17.00 x 13.00	432 x 330
242010-4XA	24.00 x 20.00 x 10.00	610 x 508 x 254	AW2420P	AW2420GP	20.87 x 16.87	530 x 428
362410-4XA	36.00 x 24.00 x 10.00	914 x 610 x 254	AW3624P	AW3624GP	32.87 x 20.87	835 x 530
363010-4XA	36.00 x 30.00 x 10.00	914 x 762 x 254	AW3630P	AW3630GP	32.87 x 26.87	835 x 682
423010-4XA	42.00 x 30.00 x 10.00	1067 x 762 x 254	AW4230P	AW4230GP	38.87 x 26.87	987 x 682
242412-4XA	24.00 x 24.00 x 12.00	610 x 610 x 305	AW2424P	AW2424GP	20.87 x 20.87	530 x 530
302412-4XA	30.00 x 24.00 x 12.00	762 x 610 x 305	AW3024P	AW3024GP	26.87 x 20.87	682 x 530
363012-4XA	36.00 x 30.00 x 12.00	914 x 762 x 305	AW3630P	AW3630GP	32.87 x 26.87	835 x 682
483612-4XA	48.00 x 36.00 x 12.00	1219 x 914 x 305	AW4836P	AW4836GP	44.87 x 32.87	1140 x 835
603612-4XA	60.00 x 36.00 x 12.00	1524 x 914 x 305	AW6036P	AW6036GP	56.87 x 32.87	1444 x 835
362416-4XA	36.00 x 24.00 x 16.00	914 x 610 x 406	AW3624P	AW3624GP	32.87 x 20.87	835 x 530
363016-4XA	36.00 x 30.00 x 16.00	914 x 762 x 406	AW3630P	AW3630GP	32.87 x 26.87	835 x 682
483616-4XA	48.00 x 36.00 x 16.00	1219 x 914 x 406	AW4836P	AW4836GP	44.87 x 32.87	1140 x 835

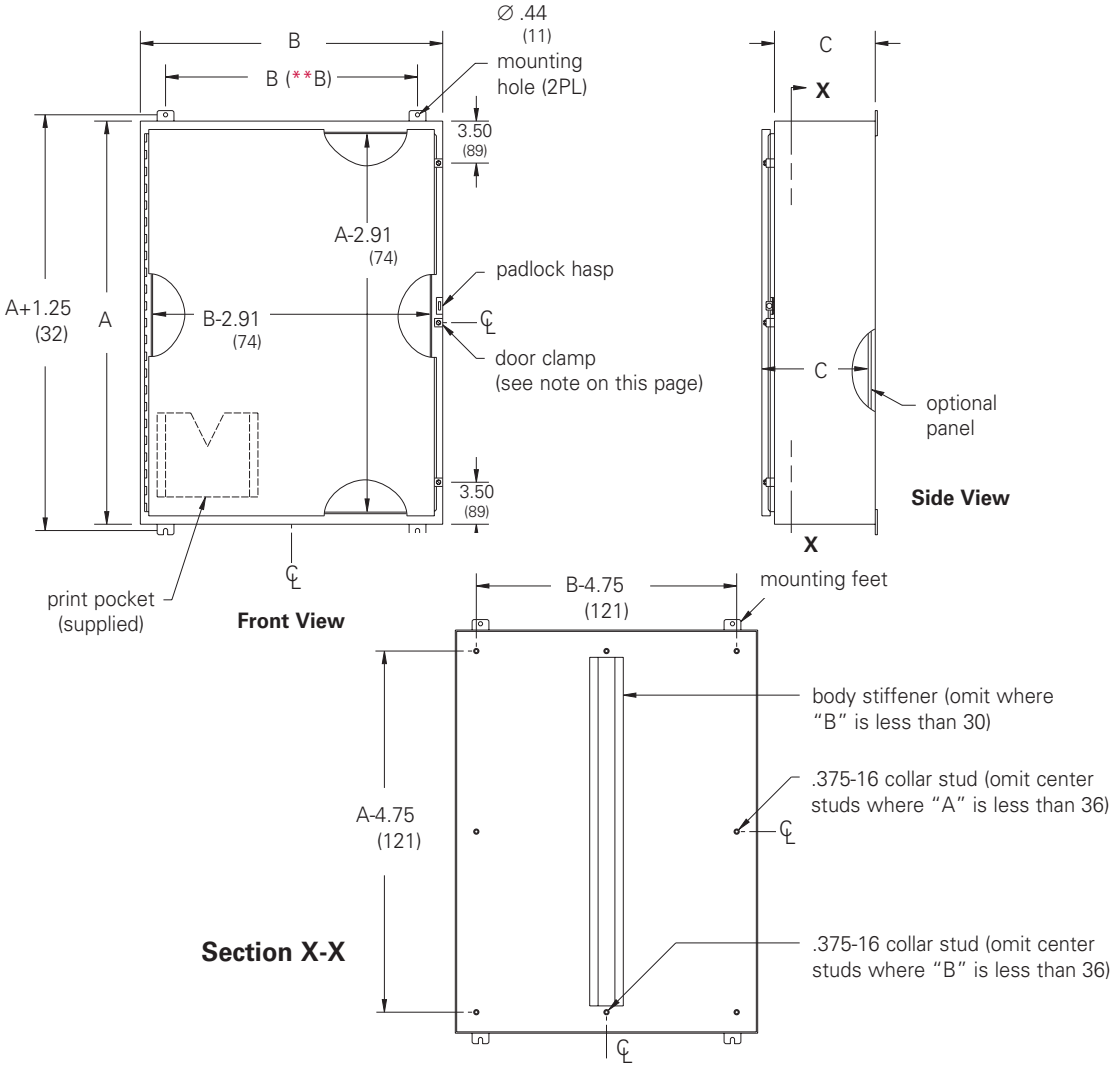

Notes: Dimensions: **B = (-2.50) if 12 inches wide; (-6.00) if wider than 12 inches. Clamps are mounted along three sides of the enclosure door. Spacing between clamps along side opposite the hinge does not exceed 15 inches.
Dimensions are in inches. Millimeters shown are for reference only. Data subject to change without notice.

Wall-Mount Enclosures
Type 4X Premier™ Series with Quarter-Turn Latches
Data Sheet

Application
- Houses electrical controls and instruments
- Intended for indoor or outdoor use where a corrosive environment exists
- Protects against corrosion, circulating and windblown dust, falling dirt, dripping non-corrosive liquids, rain, splashing water and hose directed water

Standards
- UL 508A Listed, Type 4X, Type 4 and Type 12
- cUL Listed, Type 4X, Type 4 and Type 12
- Conforms to NEMA standard for Type 4X, Type 4 and 12
- Wall-mounting brackets required to maintain UL/CSA external mounting requirements

Finish
- Door and sides of body have a smooth #4 brushed finish

Accessories
- Premier panels
- NEMA panel adapters
- Depth adjustment brackets
- Print pockets
- Padlockable or keyed handles
- Security latch inserts
- Mounting foot kits
- EIA/TIA rack mounting angles
- Swing-out panels
- See Premier Series Accessories pages, 212-217

Construction
- Enclosure and door are fabricated from code gauge Type 304 or Type 316L stainless steel (see pages 209 & 210)
- All continuous welded seams are finished smooth
- Hardware kit provided contains grounding hardware, .312-18 flanged hex nuts for panel mounting, and sealing washers for body mounting holes

Body Construction
- Body flange trough design is formed around body opening to divert liquid contaminants away from door opening
- Reduced width flange design increases enclosure opening
- Ground stud provided on enclosure body and door
- .312-18 collar studs are provided for mounting optional Premier panels
- Enclosure mounting holes in body provided for direct mounting or optional mounting feet

Door Construction
- Doors are secured to the body with a concealed hinge design on one side and slotted quarter-turn flush latch(es) on the opposite side
- Doors are easily removed and interchangeable
- Door has a seamless poured in-place gasket
- Door opens 180° for easy access
- Window-door enclosures feature flush-mounted clear polycarbonate window

Discount Schedule: C2

Subclass: TE0

Notes: We can provide special sizes, finishes and other modifications. Consult the factory for your special requirements.

Wall-Mount Enclosures
Type 4X Premier™ Series with Quarter-Turn Latches
Catalog Number

Enclosure Catalog Type 304 Stainless Steel Solid Door	Enclosure Catalog Type 304 Stainless Steel Window Door	Enclosure Number A x B x C in.	Enclosure Number A x B x C mm	Size Door/ Body Gauge	* Panel Catalog Number	Panel Size H x W in.	Panel Size H x W mm	Mounting D x E in.	Mounting D x E mm	Window Size F x G in.	Window Size F x G mm	Latch Qty.	J in.	J mm	K in.	K mm
1084-SDSS4	—	10 x 8 x 4	254 x 203 x 102	16/16	108P	8.00 x 6.00	203 x 152	8.50 x 6.37	216 x 162	—	—	1	—	—	5.00	127
1086-SDSS4	—	10 x 8 x 6	254 x 203 x 152	16/16	108P	8.00 x 6.00	203 x 152	8.50 x 6.37	216 x 162	—	—	1	—	—	5.00	127
12106-SDSS4	—	12 x 10 x 6	305 x 254 x 152	16/16	1210P	10.00 x 8.00	254 x 203	10.50 x 8.37	267 x 213	—	—	1	—	—	6.00	152
12126-SDSS4	12126-SDWSS4	12 x 12 x 6	305 x 305 x 152	16/16	1212P	10.00 x 10.00	254 x 254	10.50 x 10.37	267 x 264	8.25 x 7.00	210 x 178	1	—	—	6.00	152
16126-SDSS4	16126-SDWSS4	16 x 12 x 6	406 x 305 x 152	16/16	1612P	14.00 x 10.00	356 x 254	14.50 x 10.37	368 x 264	12.25 x 7.00	311 x 178	1	—	—	8.00	203
16166-SDSS4	—	16 x 16 x 6	406 x 406 x 152	16/16	1616P	14.00 x 14.00	356 x 356	14.50 x 14.37	368 x 365	—	—	1	—	—	8.00	203
20166-SDSS4	20166-SDWSS4	20 x 16 x 6	508 x 406 x 152	16/16	2016P	18.00 x 14.00	457 x 356	18.50 x 14.37	470 x 365	16.25 x 11.00	413 x 279	1	—	—	10.00	254
20206-SDSS4	20206-SDWSS4	20 x 20 x 6	508 x 508 x 152	16/16	2020P	18.00 x 18.00	457 x 457	18.50 x 18.37	470 x 467	16.25 x 15.00	413 x 381	1	—	—	10.00	254
16128-SDSS4	—	16 x 12 x 8	406 x 305 x 203	16/16	1612P	14.00 x 10.00	356 x 254	14.50 x 10.37	368 x 264	—	—	1	—	—	8.00	203
16168-SDSS4	—	16 x 16 x 8	406 x 406 x 203	16/16	1616P	14.00 x 14.00	356 x 356	14.50 x 14.37	368 x 365	—	—	1	—	—	8.00	203
16208-SDSS4	—	16 x 20 x 8	406 x 508 x 203	16/16	2016P	14.00 x 18.00	356 x 457	14.50 x 18.37	368 x 467	—	—	1	—	—	8.00	203
20168-SDSS4	20168-SDWSS4	20 x 16 x 8	508 x 406 x 203	16/16	2016P	18.00 x 14.00	457 x 356	18.50 x 14.37	470 x 365	16.25 x 11.00	413 x 279	1	—	—	10.00	254
20208-SDSS4	20208-SDWSS4	20 x 20 x 8	508 x 508 x 203	16/16	2020P	18.00 x 18.00	457 x 457	18.50 x 18.37	470 x 467	16.25 x 15.00	413 x 381	1	—	—	10.00	254
24168-SDSS4	—	24 x 16 x 8	610 x 406 x 203	16/16	2416P	22.00 x 14.00	559 x 356	22.50 x 14.37	572 x 365	—	—	1	—	—	12.00	305
24208-SDSS4	24208-SDWSS4	24 x 20 x 8	610 x 508 x 203	16/16	2420P	22.00 x 18.00	559 x 457	22.50 x 18.37	572 x 467	20.25 x 15.00	514 x 381	1	—	—	12.00	305
24248-SDSS4	24248-SDWSS4	24 x 24 x 8	610 x 610 x 203	14/16	2424P	22.00 x 22.00	559 x 559	22.50 x 22.37	572 x 568	20.25 x 17.62	514 x 448	2	5.00	127	—	—
30248-SDSS4	30248-SDWSS4	30 x 24 x 8	762 x 610 x 203	14/16	3024P	28.00 x 22.00	711 x 559	28.50 x 22.37	724 x 568	26.25 x 17.62	667 x 448	2	5.00	127	—	—
30308-SDSS4	—	30 x 30 x 8	762 x 762 x 203	14/14	3030P	28.00 x 28.00	711 x 711	28.50 x 28.37	724 x 721	—	—	2	5.00	127	—	—
36248-SDSS4	—	36 x 24 x 8	914 x 610 x 203	14/16	3624P	34.00 x 22.00	864 x 559	34.50 x 22.37	876 x 568	—	—	2	5.00	127	—	—
36308-SDSS4	—	36 x 30 x 8	914 x 762 x 203	14/14	3630P	34.00 x 28.00	864 x 711	34.50 x 28.37	876 x 721	—	—	2	5.00	127	—	—
36368-SDSS4	—	36 x 36 x 8	914 x 914 x 203	14/14	3636P	34.00 x 34.00	864 x 864	34.50 x 34.37	876 x 873	—	—	4	5.00	127	—	—
201610-SDSS4	—	20 x 16 x 10	508 x 406 x 254	14/14	2016P	18.00 x 14.00	457 x 356	18.50 x 14.37	470 x 365	—	—	1	—	—	10.00	254
302010-SDSS4	—	30 x 20 x 10	762 x 508 x 254	14/14	3020P	28.00 x 18.00	711 x 457	28.50 x 18.37	724 x 467	—	—	2	5.00	127	—	—
423010-SDSS4	—	42 x 30 x 10	1067 x 762 x 254	14/14	4230P	40.00 x 28.00	1016 x 711	40.50 x 28.37	1029 x 721	—	—	5	5.00	127	21.00	533
202012-SDSS4	202012-SDWSS4	20 x 20 x 12	508 x 508 x 305	14/14	2020P	18.00 x 18.00	457 x 457	18.50 x 18.37	470 x 467	16.25 x 15.00	413 x 381	1	—	—	10.00	254
242012-SDSS4	—	24 x 20 x 12	610 x 508 x 305	14/14	2420P	22.00 x 18.00	559 x 457	22.50 x 18.37	572 x 467	—	—	2	5.00	127	—	—
242412-SDSS4	—	24 x 24 x 12	610 x 610 x 305	14/14	2424P	22.00 x 22.00	559 x 559	22.50 x 22.37	572 x 568	—	—	2	5.00	127	—	—
302412-SDSS4	302412-SDWSS4	30 x 24 x 12	762 x 610 x 305	14/14	3024P	28.00 x 22.00	711 x 559	28.50 x 22.37	724 x 568	26.25 x 17.62	667 x 448	2	5.00	127	—	—
303012-SDSS4	—	30 x 30 x 12	762 x 762 x 305	14/14	3030P	28.00 x 28.00	711 x 711	28.50 x 28.37	724 x 724	—	—	2	5.00	127	—	—
362412-SDSS4	—	36 x 24 x 12	914 x 610 x 305	14/14	3624P	34.00 x 22.00	864 x 559	34.50 x 22.37	876 x 568	—	—	2	5.00	127	—	—
363012-SDSS4	—	36 x 30 x 12	914 x 762 x 305	14/14	3630P	34.00 x 28.00	864 x 711	34.50 x 28.37	876 x 721	—	—	2	5.00	127	—	—
363612-SDSS4	—	36 x 36 x 12	914 x 914 x 305	14/14	3636P	34.00 x 34.00	864 x 864	34.50 x 34.37	876 x 873	—	—	4	5.00	127	—	—
423612-SDSS4	—	42 x 36 x 12	1067 x 914 x 305	14/14	4236P	40.00 x 34.00	1016 x 864	40.50 x 34.37	1029 x 873	—	—	5	5.00	127	21.00	533
483612-SDSS4	—	48 x 36 x 12	1219 x 914 x 305	14/14	4836P	46.00 x 34.00	1168 x 864	46.50 x 34.37	1181 x 873	—	—	5	5.00	127	24.00	609
603612-SDSS4	—	60 x 36 x 12	1524 x 914 x 305	14/14	6036P	58.00 x 34.00	1473 x 864	58.50 x 34.37	1486 x 873	—	—	5	5.00	127	30.00	762
242416-SDSS4	—	24 x 24 x 16	610 x 610 x 406	14/14	2424P	22.00 x 22.00	559 x 559	22.50 x 22.37	572 x 568	—	—	2	5.00	127	—	—
302416-SDSS4	—	30 x 24 x 16	762 x 610 x 406	14/14	3024P	28.00 x 22.00	711 x 559	28.50 x 22.37	724 x 568	—	—	2	5.00	127	—	—
423616-SDSS4	—	42 x 36 x 16	1067 x 914 x 406	14/14	4236P	40.00 x 34.00	1016 x 864	40.50 x 34.37	1029 x 873	—	—	5	5.00	127	21.00	533
483616-SDSS4	—	48 x 36 x 16	1219 x 914 x 406	14/14	4836P	46.00 x 34.00	1168 x 864	46.50 x 34.37	1181 x 873	—	—	5	5.00	127	24.00	609
603616-SDSS4	—	60 x 36 x 16	1524 x 914 x 406	14/14	6036P	58.00 x 34.00	1473 x 864	58.50 x 34.37	1486 x 873	—	—	5	5.00	127	30.00	762

See dimensional drawings on page 211.
* See page 212 for other panel information.

Notes: Dimensions are in inches. Millimeters shown are for reference only. Data subject to change without notice.

Wall-Mount Enclosures
Type 4X Premier™ Series with Quarter-Turn Latches
Catalog Number

Enclosure Catalog Number Type 316L Stainless Steel Solid Door	Enclosure Size A x B x C in.	Enclosure Size A x B x C mm	Stainless Door/ Body Gauge	Stainless Steel Panel Catalog Number	Steel Panel* Catalog Number	Panel Size H x W in.	Panel Size H x W mm	Mounting D x E in.	Mounting D x E mm	Latch Qty	J in.	J mm	K	K
1084-SDSS6	10 x 8 x 4	254 x 203 x 102	16/16	**108P**	**108PSS4**	8.00 x 6.00	203 x 152	8.50 x 6.37	216 x 162	1	—	—	5.00	127
1086-SDSS6	10 x 8 x 6	254 x 203 x 152	16/16	**108P**	**108PSS4**	8.00 x 6.00	203 x 152	8.50 x 6.37	216 x 162	1	—	—	5.00	127
12106-SDSS6	12 x 10 x 6	305 x 254 x 152	16/16	**1210P**	**1210PSS4**	10.00 x 8.00	254 x 203	10.50 x 8.37	267 x 213	1	—	—	6.00	152
12126-SDSS6	12 x 12 x 6	305 x 305 x 152	16/16	**1212P**	**1212PSS4**	10.00 x 10.00	254 x 254	10.50 x 10.37	267 x 264	1	—	—	6.00	152
16126-SDSS6	16 x 12 x 6	406 x 305 x 152	16/16	**1612P**	**1612PSS4**	14.00 x 10.00	356 x 254	14.50 x 10.37	368 x 264	1	—	—	8.00	203
16166-SDSS6	16 x 16 x 6	406 x 406 x 152	16/16	**1616P**	**1616PSS4**	14.00 x 14.00	356 x 356	14.50 x 14.37	368 x 365	1	—	—	8.00	203
20166-SDSS6	20 x 16 x 6	508 x 406 x 152	16/16	**2016P**	**2016PSS4**	18.00 x 14.00	457 x 356	18.50 x 14.37	470 x 365	1	—	—	10.00	254
20206-SDSS6	20 x 20 x 6	508 x 508 x 152	16/16	**2020P**	**2020PSS4**	18.00 x 18.00	457 x 457	18.50 x 18.37	470 x 467	1	—	—	10.00	254
16128-SDSS6	16 x 12 x 8	406 x 305 x 203	16/16	**1612P**	**1612PSS4**	14.00 x 10.00	356 x 254	14.50 x 10.37	368 x 264	1	—	—	8.00	203
16168-SDSS6	16 x 16 x 8	406 x 406 x 203	16/16	**1616P**	**1616PSS4**	14.00 x 14.00	356 x 356	14.50 x 14.37	368 x 365	1	—	—	8.00	203
16208-SDSS6	16 x 20 x 8	406 x 508 x 203	16/16	**2016P**	**2016PSS4**	14.00 x 18.00	356 x 457	14.50 x 18.37	368 x 467	1	—	—	8.00	203
20168-SDSS6	20 x 16 x 8	508 x 406 x 203	16/16	**2016P**	**2016PSS4**	18.00 x 14.00	457 x 356	18.50 x 14.37	470 x 365	1	—	—	10.00	254
20208-SDSS6	20 x 20 x 8	508 x 508 x 203	16/16	**2020P**	**2020PSS4**	18.00 x 18.00	457 x 457	18.50 x 18.37	470 x 467	1	—	—	10.00	254
24168-SDSS6	24 x 16 x 8	610 x 406 x 203	16/16	**2416P**	**2416PSS4**	22.00 x 14.00	559 x 356	22.50 x 14.37	572 x 365	1	—	—	12.00	305
24208-SDSS6	24 x 20 x 8	610 x 508 x 203	16/16	**2420P**	**2420PSS4**	22.00 x 18.00	559 x 457	22.50 x 18.37	572 x 467	1	—	—	12.00	305
24248-SDSS6	24 x 24 x 8	610 x 610 x 203	14/16	**2424P**	**2424PSS4**	22.00 x 22.00	559 x 559	22.50 x 22.37	572 x 568	2	5.00	127	—	—
30248-SDSS6	30 x 24 x 8	762 x 610 x 203	14/16	**3024P**	**3024PSS4**	28.00 x 22.00	711 x 559	28.50 x 22.37	724 x 568	2	5.00	127	—	—
30308-SDSS6	30 x 30 x 8	762 x 762 x 203	14/14	**3030P**	**3030PSS4**	28.00 x 28.00	711 x 711	28.50 x 28.37	724 x 721	2	5.00	127	—	—
36248-SDSS6	36 x 24 x 8	914 x 610 x 203	14/16	**3624P**	**3624PSS4**	34.00 x 22.00	864 x 559	34.50 x 22.37	876 x 568	2	5.00	127	—	—
36308-SDSS6	36 x 30 x 8	914 x 762 x 203	14/14	**3630P**	**3630PSS4**	34.00 x 28.00	864 x 711	34.50 x 28.37	876 x 721	2	5.00	127	—	—
36368-SDSS6	36 x 36 x 8	914 x 914 x 203	14/14	**3636P**	**3636PSS4**	34.00 x 34.00	864 x 864	34.50 x 34.37	876 x 873	4	5.00	127	18.00	457
201610-SDSS6	20 x 16 x 10	508 x 406 x 254	14/14	**2016P**	**2016PSS4**	18.00 x 14.00	457 x 356	18.50 x 14.37	470 x 365	1	—	—	10.00	254
302010-SDSS6	30 x 20 x 10	762 x 508 x 254	14/14	**3020P**	**3020PSS4**	28.00 x 18.00	711 x 457	28.50 x 18.37	724 x 467	2	5.00	127	—	—
423010-SDSS6	42 x 30 x 10	1067 x 762 x 254	14/14	**4230P**	**4230PSS4**	40.00 x 28.00	1016 x 711	40.50 x 28.37	1029 x 721	5	5.00	127	21.00	533
202012-SDSS6	20 x 20 x 12	508 x 508 x 305	14/14	**2020P**	**2020PSS4**	18.00 x 18.00	457 x 457	18.50 x 18.37	470 x 467	1	—	—	10.00	254
242012-SDSS6	24 x 20 x 12	610 x 508 x 305	14/14	**2420P**	**2420PSS4**	22.00 x 18.00	559 x 457	22.50 x 18.37	572 x 467	2	5.00	127	—	—
242412-SDSS6	24 x 24 x 12	610 x 610 x 305	14/14	**2424P**	**2424PSS4**	22.00 x 22.00	559 x 559	22.50 x 22.37	572 x 568	2	5.00	127	—	—
302412-SDSS6	30 x 24 x 12	762 x 610 x 305	14/14	**3024P**	**3024PSS4**	28.00 x 22.00	711 x 559	28.50 x 22.37	724 x 568	2	5.00	127	—	—
362412-SDSS6	36 x 24 x 12	914 x 610 x 305	14/14	**3624P**	**3624PSS4**	34.00 x 22.00	864 x 559	34.50 x 22.37	876 x 568	2	5.00	127	—	—
303012-SDSS6	30 x 30 x 12	762 x 762 x 305	14/14	**3030P**	**3030PSS4**	28.00 x 28.00	711 x 711	28.50 x 28.37	724 x 724	2	5.00	127	—	—
363012-SDSS6	36 x 30 x 12	914 x 762 x 305	14/14	**3630P**	**3630PSS4**	34.00 x 28.00	864 x 711	34.50 x 28.37	876 x 721	2	5.00	127	—	—
363612-SDSS6	36 x 36 x 12	914 x 914 x 305	14/14	**3636P**	**3636PSS4**	34.00 x 34.00	864 x 864	34.50 x 34.37	876 x 873	4	5.00	127	18.00	457
423612-SDSS6	42 x 36 x 12	1067 x 914 x 305	14/14	**4236P**	**4236PSS4**	40.00 x 34.00	1016 x864	40.50 x 34.37	1029 x 873	5	5.00	127	21.00	533
483612-SDSS6	48 x 36 x 12	1219 x 914 x 305	14/14	**4836P**	**4836PSS4**	46.00 x 34.00	1168 x 559	46.50 x 34.37	1181 x 873	5	5.00	127	24.00	609
603612-SDSS6	60 x 36 x 12	1524 x 914 x 305	14/14	**6036P**	**6036PSS4**	58.00 x 34.00	1473 x 559	58.50 x 34.37	1486 x 873	5	5.00	127	30.00	762
242416-SDSS6	24 x 24 x 16	610 x 610 x 406	14/14	**2424P**	**2424PSS4**	22.00 x 22.00	559 x 559	22.50 x 22.37	572 x 568	2	5.00	127	—	—
302416-SDSS6	30 x 24 x 16	762 x 610 x 406	14/14	**3024P**	**3024PSS4**	28.00 x 22.00	711 x 559	28.50 x 22.37	724 x 568	2	5.00	127	—	—
423616-SDSS6	42 x 36 x 16	1067 x 914 x 406	14/14	**4236P**	**4236PSS4**	40.00 x 34.00	1016 x 864	40.50 x 34.37	1029 x 873	5	5.00	127	21.00	533
483616-SDSS6	48 x 36 x 16	1219 x 914 x 406	14/14	**4836P**	**4836PSS4**	46.00 x 34.00	1168 x 864	46.50 x 34.37	1181 x 873	5	5.00	127	24.00	609
603616-SDSS6	60 x 36 x 16	1524 x 914 x 406	14/14	**6036P**	**6036PSS4**	58.00 x 34.00	1473 x 864	58.50 x 34.37	1486 x 873	5	5.00	127	30.00	762

See dimensional drawings on page 211.
* See page 212 for other panel information.

Notes: Dimensions are in inches. Millimeters shown are for reference only. Data subject to change without notice.

Wall-Mount Enclosures
Type 4X Premier™ Series, Stainless Steel With Quarter-Turn Latches
Illustration Sheet

See pages 207 & 208 for dimensions.

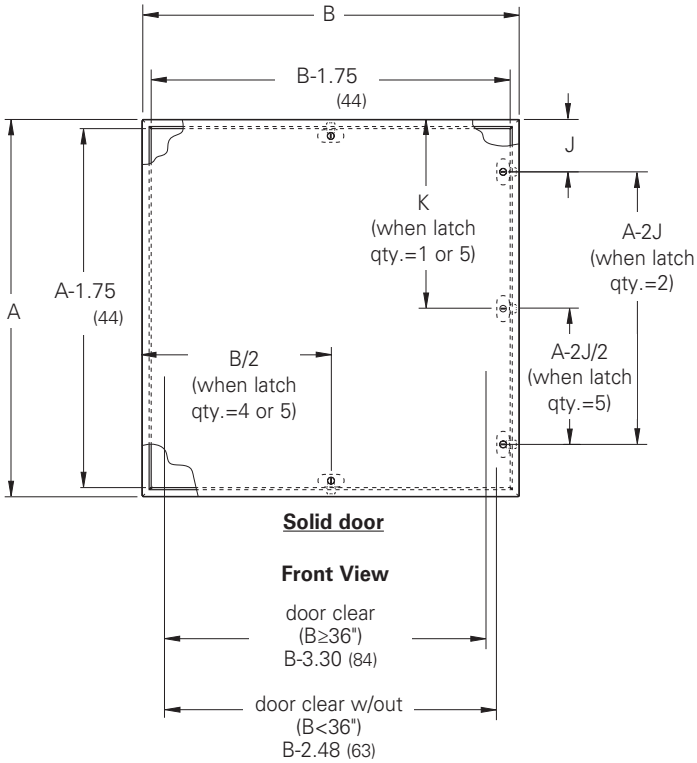

Solid door

Front View

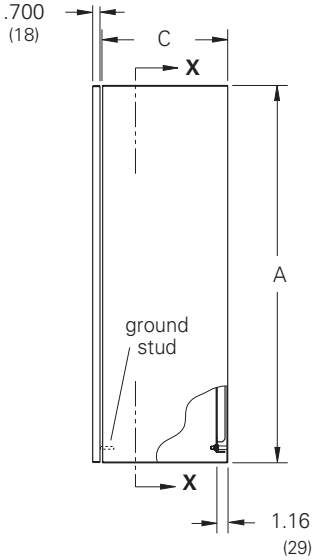

Side View

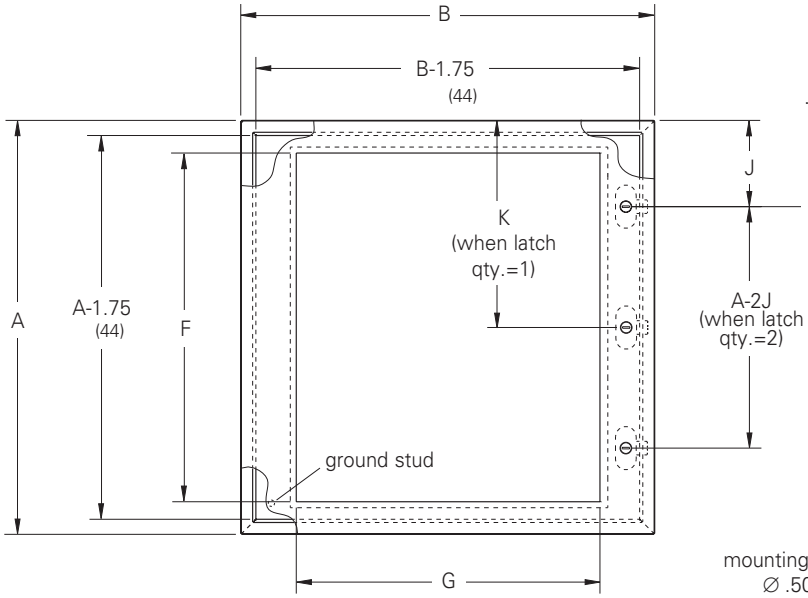

Window door

Front View

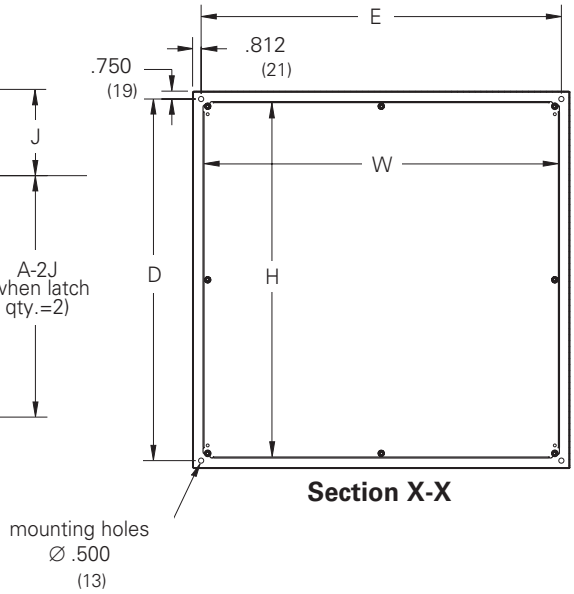

Section X-X

Notes: Dimensions are in inches. Millimeters shown are for reference only. Data subject to change without notice.

Premier™ Series Accessories

Discount Schedule: C2
Subclass: see below

Panels - Subclass: TDP

Premier panels can be installed in any Premier series enclosure and are up to 20% larger than standard NEMA panels. Panels above 24" are flanged.
Steel panels have a white polyester powder paint finish.
Stainless Steel and conductive galvanized sizes are available as shown in chart.

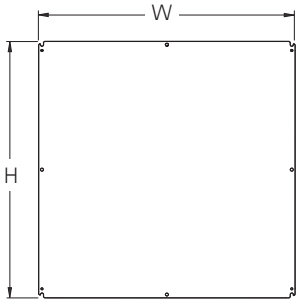

Catalog Number			Panel Size H x W		
Conductive	Steel	Stainless	in.	mm	Gauge
108GP	108P	108PSS4	8.00 x 6.00	203 x 152	14
1210GP	1210P	1210PSS4	10.00 x 8.00	254 x 203	14
1212GP	1212P	1212PSS4	10.00 x 10.00	254 x 254	14
1612GP	1612P	1612PSS4	14.00 x 10.00	356 x 254	14
1616GP	1616P	1616PSS4	14.00 x 14.00	356 x 356	12
2016GP	2016P	2016PSS4	18.00 x 14.00	457 x 356	12
2020GP	2020P	2020PSS4	18.00 x 18.00	457 x 457	12
2416GP	2416P	2416PSS4	22.00 x 14.00	559 x 356	12
2420GP	2420P	2420PSS4	22.00 x 18.00	559 x 457	12
2424GP	2424P	2424PSS4	22.00 x 22.00	559 x 559	12
2442GP	2442P	2442PSS4	22.00 x 40.00	559 x 1016	12
3020GP	3020P	3020PSS4	28.00 x 18.00	711 x 457	12
3024GP	3024P	3024PSS4	28.00 x 22.00	711 x 559	12
3030GP	3030P	3030PSS4	28.00 x 28.00	711 x 711	12
3048GP	3048P	3048PSS4	28.00 x 46.00	711 x 1168	12
3060GP	3060P	3060PSS4	28.00 x 58.00	711 x 1473	12
3624GP	3624P	3624PSS4	34.00 x 22.00	864 x 559	12
3630GP	3630P	3630PSS4	34.00 x 28.00	864 x 711	12
3636GP	3636P	3636PSS4	34.00 x 34.00	864 x 864	12
4230GP	4230P	4230PSS4	40.00 x 28.00	1016 x 711	12
4236GP	4236P	4236PSS4	40.00 x 34.00	1016 x 864	12
4824GP	4824P	4824PSS4	46.00 x 22.00	1168 x 559	12
4836GP	4836P	4836PSS4	46.00 x 34.00	1168 x 864	12
6036GP	6036P	6036PSS4	58.00 x 34.00	1473 x 864	12

NEMA Panel Adapters - Subclass: TD0

NEMA panel adapters allow standard NEMA panels to be used in Premier series enclosures. Decreased height and width of NEMA panels increase space around panel for wire management. Kit includes four adapters and four .375-16 flanged hex nuts.
Finish: Zinc Plated
(**Note**: Cannot be used with enclosures 12" x 12" (305 mm x 305 mm) or smaller)

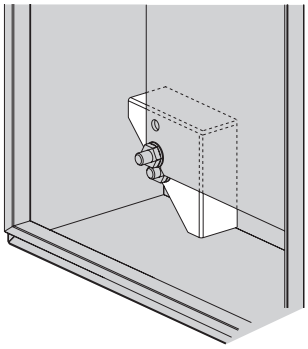

Catalog Number	Qty.	For use with Premier Enclosures
PCK4	4	30" x 30" or smaller

Mounting Foot Kits - Subclass: TD0

Mounting foot kits are available in stainless steel.
Four feet and hardware are included.

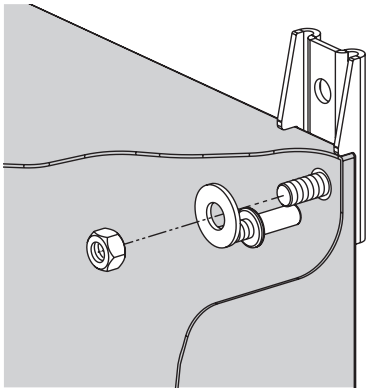

Catalog Number	Qty.	Description
WMKSS6	4	Type 316 Stainless Steel

Notes: Dimensions are in inches. Millimeters shown are for reference only. Data subject to change without notice.

Premier™ Series Accessories

Discount Schedule: C2

Subclass: TD0

Swing-Out Panels

Swing-out panels offer a means for mounting user components and equipment near the front of an enclosure opening. Panel pivots from front of enclosure to allow easy access to internal equipment. Swing-out panels are 14 gauge with a white polyester powder finish and includes all hardware for mounting to front flange of enclosure.

(**Note**: Cannot be used in conjunction with depth adjustment brackets).

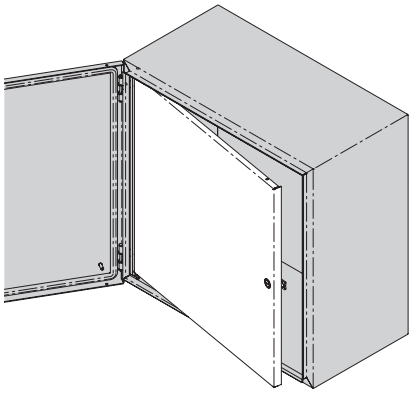

Note: Swing-out panel distance from panel face to inside of enclosure cover equals 1¼".

Catalog Number	Panel Size Height x Width in.	mm	For use with Premier Enclosures A x B
1212SP	9.78 x 9.84	248 x 250	12"x12"
1612SP	13.78 x 9.84	350 x 250	16"x12"
1616SP	13.78 x 13.84	350 x 352	16"x16"
1620SP	13.78 x 17.84	350 x 453	16"x20"
2016SP	17.78 x 13.84	452 x 352	20"x16"
2020SP	17.78 x 17.84	452 x 453	20"x20"
2024SP	17.78 x 21.84	452 x 555	20"x24"
2416SP	21.78 x 13.84	553 x 352	24"x16"
2420SP	21.78 x 17.84	553 x 453	24"x20"
2424SP	21.78 x 21.84	553 x 555	24"x24"
3020SP	27.78 x 17.84	706 x 453	30"x20"
3024SP	27.78 x 21.84	706 x 555	30"x24"
3030SP	27.78 x 27.84	706 x 707	30"x30"
3624SP	33.78 x 21.84	858 x 555	36"x24"
3630SP	33.78 x 27.84	858 x 707	36"x30"
3636SP	33.78 x 33.84	858 x 860	36"x36"

Dead Front Panels

Dead front kits offer a means for mounting user components and equipment near the front of an enclosure opening. Also creates a barrier and controls access to the enclosure interior. Kit includes ANSI 61 gray panel and all hardware for mounting to enclosures.

(**Note:** Cannot be used in conjunction with depth adjustment brackets).

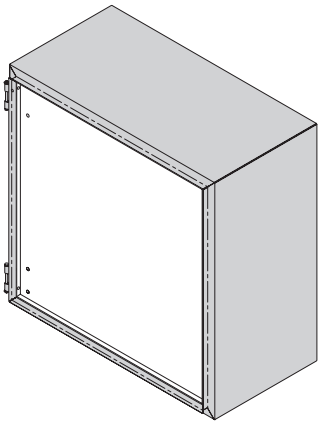

Catalog Number	For use with Premier Enclosures A x B
1212DF	12"x12"
1612DF	16"x12"
2016DF	20"x16"
2020DF	20"x20"
2420DF	24"x20"
2424DF	24"x24"
3024DF	30"x24"

Note: Dead front panel distance from panel face to inside of enclosure cover equals 1¼".

Mounting Channels

Mounting channels create a vertical or horizontal framework for DIN rail, flexible mounting straps, or other component attachment. Two channels provided for mounting on enclosure collar studs.
Finish: Zinc Plated

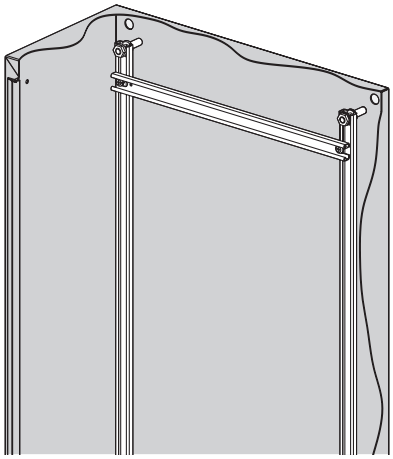

Catalog Number	Qty.	For use with Premier Enclosures
12MC	2	12" height or width
16MC	2	16" height or width
20MC	2	20" height or width
24MC	2	24" height or width
30MC	2	30" height or width
36MC	2	36" height or width
42MC	2	42" height or width
48MC	2	48" height or width
60MC	2	60" height or width

Notes: Dimensions are in inches. Millimeters shown are for reference only. Data subject to change without notice.

Premier™ Series Accessories

Discount Schedule: C2

Subclass: TD0

DIN Rail Kits

DIN rail kits provide flexibility for mounting DIN type snap-on equipment. Three styles; TS32x15, slotted; TS35x7.5, slotted; TS35x15, slotted all attach to collar studs either horizontally or vertically. Three DIN rails, screws and channel nuts are provided.
Finish: Yellow Zinc

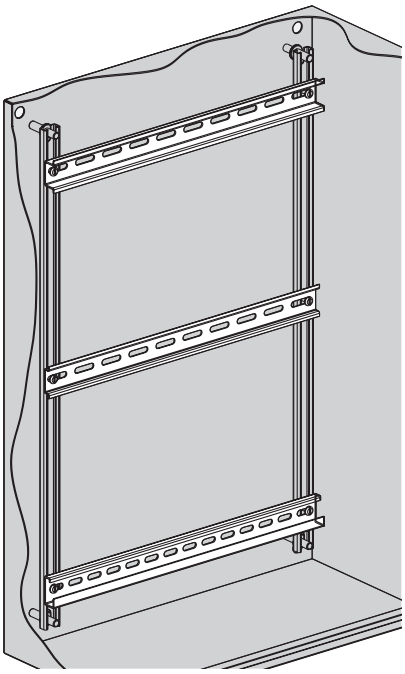

Catalog Number	Description	For use with Premier Enclosures
12DR1P	TS32 x 15, slotted	12" height or width
16DR1P	TS32 x 15, slotted	16" height or width
20DR1P	TS32 x 15, slotted	20" height or width
24DR1P	TS32 x 15, slotted	24" height or width
12DR3P	TS35 x 7.5, slotted	12" height or width
16DR3P	TS35 x 7.5, slotted	16" height or width
20DR3P	TS35 x 7.5, slotted	20" height or width
24DR3P	TS35 x 7.5, slotted	24" height or width
12DRCP	TS35 x 15, slotted	12" height or width
16DRCP	TS35 x 15, slotted	16" height or width
20DRCP	TS35 x 15, slotted	20" height or width
24DRCP	TS35 x 15, slotted	24" height or width

Flexible Mounting Straps

Flexible mounting straps offer a versatile, horizontal or vertical mounting method inside enclosure body. Two designs; 1-hole or 3-hole pattern increase mounting flexibility and attach to enclosure collar studs. Flexible mounting strap kit contains two straps and hardware.
Finish: Zinc Plated

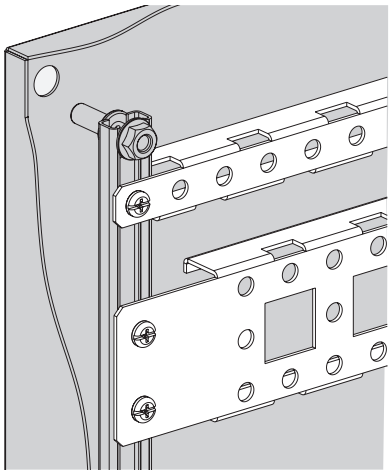

Catalog Number	Description	Fits Premier Enclosures
12GS1	1 hole	12" height or width
16GS1	1 hole	16" height or width
20GS1	1 hole	20" height or width
24GS1	1 hole	24" height or width
30GS1	1 hole	30" height or width
36GS3	3 hole	36" height or width
42GS3	3 hole	42" height or width
48GS3	3 hole	48" height or width
60GS3	3 hole	60" height or width

Notes: Dimensions are in inches. Millimeters shown are for reference only. Data subject to change without notice.

Premier™ Series Accessories

Discount Schedule: C2

Subclass: TD0

Rack Mounting Angles

Relay rack angles are designed for mounting EIA 19" rack mount equipment inside 24" wide enclosures. Fabricated from 14 gauge steel and zinc plated. Rack angles are mounted to enclosure flange with hardware provided. Rack mount angles are untapped and require screws and cage nuts for equipment mounting (order separately).
Finish: Zinc Plated

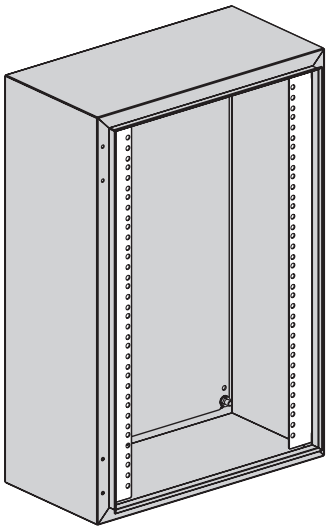

Catalog Number	For use with Premier Enclosures	Mounting Units
10URMA	20" height	10
12URMA	24" height	12
16URMA	30" height	16
19URMA	36" height	19
26URMA	48" height	26

Universal Spacing [5/8" (16mm), 5/8" (16mm), 1/2" (13mm)]

Swing-Out Rack Frames

Swing-out rack frames allow mounting of EIA 19" rack mount equipment. Flexible pivoting framework provides access to back of equipment or other internal components. Designed for use with 24" wide Premier series enclosures. Mounting hardware included. Swing-out rack frame holes are untapped and require screws and cage nuts for equipment mounting (order separately).

(**Note:** Cannot be used in conjunction with depth adjustment brackets).
Finish: ANSI Gray Polyester Powder

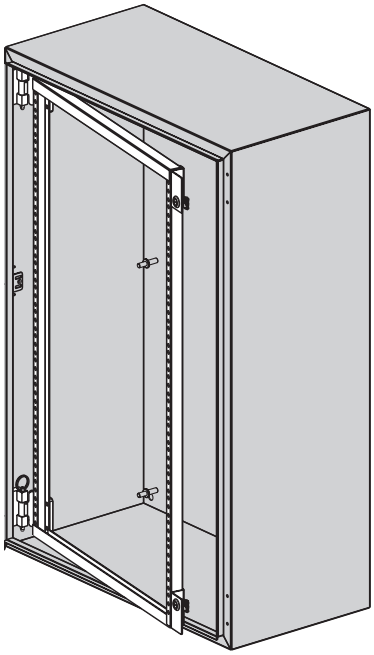

Catalog Number	For use with Premier Enclosures	Mounting Units
2424SF	24" x 24"	11
3024SF	30" x 24"	15
3624SF	36" x 24"	18

Universal Spacing [(5/8" (16mm), 5/8" (16mm), 1/2" (13mm)]

Notes: Dimensions are in inches. Millimeters shown are for reference only. Data subject to change without notice.

Premier™ Series Accessories

Discount Schedule: C2

Subclass: TD0

Handles

Padlocking, key-locking or non-locking handles are interchangeable with standard slotted quarter-turn flush latch on Premier series enclosures. Available keyed alike or keyed different, please specify when ordering.

WMHNL WMHK-01 thru WMHK-04 WMHPTO

Catalog Number	Description	Latch Type
WMHNL	Wall-mount handle, non-locking	Single point
WMHK-01	Wall-mount handle, key-locking - keyed 01	Single point
WMHK-02	Wall-mount handle, key-locking - keyed 02	Single point
WMHK-03	Wall-mount handle, key-locking - keyed 03	Single point
WMHK-04	Wall-mount handle, key-locking - keyed 04	Single point
WMHPTO	Wall-mount handle, padlockable	Single point

Security Latch Inserts

Security latch inserts interchange with slotted quarter-turn flush latch and provide security and control access to interior of enclosure. Inserts include matching key.

7MTLK

Catalog Number	Description	Latch Type
7MTLK	7mm triangular latch insert	Single point
7MSLK	7mm square latch insert	Single point
3MDBLK	3mm double bit latch insert	Single point

7MSLK

3MDBLK

Print Pockets

Print pockets provide a convenient place to store operation manuals, diagrams, or other documents inside the enclosure. Thermoplastic pockets are gray and have cut away areas for viewing contents. Pockets have adhesive backing for mounting inside on enclosure door.

Catalog Number	Length x Width
32170	6" x 6"
32171	10" x 10"

Notes: Dimensions are in inches. Millimeters shown are for reference only. Data subject to change without notice.

Premier™ Series Accessories

Discount Schedule: C2

Subclass: TD0

Depth Adjustment Brackets

Depth adjustment brackets allow variable depth mounting of premier accessories. Designed for use with 6", 8" or 12" deep enclosures. Kit is available in quantities of 4 or 2 and includes mounting channel, adjustable mechanism and hardware. When enclosure has 6 collar studs, use two kits.

(**Note:** Not for use with swing-out rack frame, dead front panel or swing-out panel).

Finish: Zinc Plated

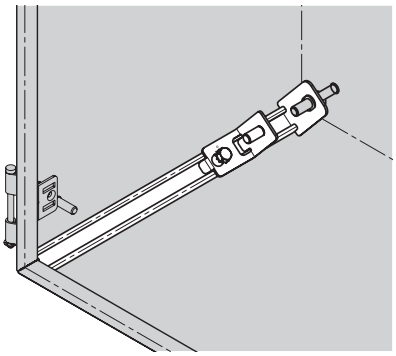

Catalog Number	Qty.	For use with Premier Enclosures
64AMK	4	6" depth or greater
84AMK	4	8" depth or greater
82AMK	2	8" depth or greater
124AMK	4	12" depth or greater
122AMK	2	12" depth or greater

Pole Mounting Kits

Pole mounting kits allow installation of enclosure on round or rectangular poles. Kit includes hot dip galvanized after fabrication strut channel, stainless steel band and hardware for top and bottom mounting of enclosure.

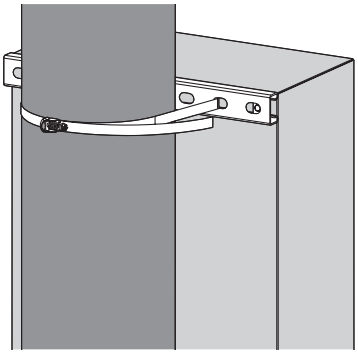

Note: Pole diameter range 4" minimum to 12" maximum.

Catalog Number	For use with Premier Enclosures
12PMK	12" width
16PMK	16" width
20PMK	20" width
24PMK	24" width
30PMK	30" width

Hardware

Phillips head screws and cage nuts are available in #10-32, #12-24 or M6 and allow mounting of equipment to untapped holes in rack mounting angles and swing-out rack frame.

Catalog Number	Screw Type
E2-MA-1032-PHMS-100	#10-32 Phillips
E2-MA-1224-PHMS-100	#12-24 Phillips
E2-MA-M6-PHMS-100	M6 Phillips

Catalog Number	Cage Nut Type
E2-MA-CN-1032-100	#10-32 Tapped
E2-MA-CN-1224-100	#12-24 Tapped
E2-MA-CN-M6-100	M6 Tapped

Sold in bags of 100 pieces.

Notes: Dimensions are in inches. Millimeters shown are for reference only. Data subject to change without notice.

Slope Top Wall-Mount Enclosures
Type 4X EnviroShield™ series
Data Sheet

Application
- Houses electrical controls and instruments
- Intended for use in wash down applications
- Protects against corrosion, circulating and windblown dust, falling dirt, dripping non-corrosive liquids, rain, splashing water and hose directed water

Standards
- UL 508A Listed, Type 4X, Type 4 and Type 12
- cUL Listed, Type 4X, Type 4 and Type 12
- Conforms to NEMA standard for Type 4X
- Meets NSF 169 requirements
- Wall-mounting brackets required to maintain UL/CSA external mounting requirements

Finish
- Door and sides of body have a smooth #4 brushed finish

Accessories
- Panels
- Stand-off spacer kit
- Padlock handle kit
- Wing knob handle kit

Construction
- Enclosure and hardware are constructed of corrosion-resistant, food-grade 304 stainless steel
- Features a 20 degree slope top design to direct water forward to an angled trough flange to support water runoff
- Top angle trough features 1.5 degree angle toward hinge side for easy draining of water and seals with FIP gasket against a straight top edge to reduce exposed door surface
- All continuous welded seams are finished smooth
- Hardware kit provided contains grounding hardware, .312-18 flanged hex nuts for panel mounting, and sealing washers for body mounting holes

Body Construction
- Body flange trough design is formed around body opening to divert liquid contaminants away from door opening
- Ground stud provided on enclosure body and door
- .312-18 collar studs are provided for mounting optional panel
- Enclosure mounting holes in body provided for direct mounting, optional stand-off kit, or optional mounting feet

Door Construction
- Features lift off bullet hinges with door cutouts for cleaning access and to minimize contamination
- High quality stainless steel quarter-turn latches
- Doors are easily removed and interchangeable
- Seamless poured in-place gasket
- Door opens 140 degrees for easy access

Discount Schedule: C2
Subclass: TS0

Slope Top Wall-Mount Enclosures
Type 4X EnviroShield™ series
Illustration Sheet and Catalog Number

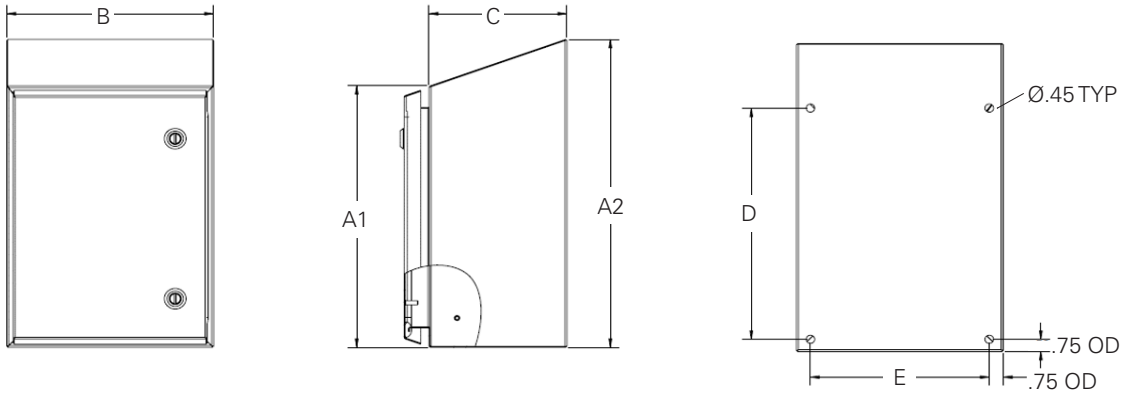

Enclosure Catalog Number	Dimensions Height x Width x Depth A1 x A2 x B x C		Size door/ body gauge	Mounting Dimensions		Latch Qty.	Panel Catalog Number	Panel Size Dimensions	
Stainless Steel	in.	mm		D x E (in.)	D x E (mm)			in.	mm
ES-16128-4XS	16.24 x 19.10 x 12.00 x 8.00	412 x 485 x 305 x 203	16 GA/16 GA	14.75 x 10.50	374 x 266	2	AW1612P	13.00 x 9.00	330 x 229
ES-16168-4XS	16.24 x 19.10 x 16.00 x 8.00	412 x 485 x 406 x 203	16 GA/16 GA	14.75 x 14.50	374 x 368	2	AW1616P	13.00 x 13.00	330 x 330
ES-20168-4XS	20.24 x 23.10 x 16.00 x 8.00	514 x 587 x 406 x 203	16 GA/16 GA	18.75 x 14.50	476 x 368	2	AW2016P	17.00 x 13.00	432 x 330
ES-20208-4XS	20.24 x 23.10 x 20.00 x 8.00	514 x 587 x 508 x 203	16 GA/16 GA	18.75 x 18.50	476 x 469	2	AW2020P	17.00 x 17.00	432 x 432
ES-24208-4XS	24.30 x 27.14 x 20.00 x 8.00	617 x 689 x 508 x 203	16 GA/14 GA	22.75 x 18.50	577 x 469	2	AW2420P	20.87 x 16.87	530 x 429
ES-24248-4XS	24.30 x 27.14 x 24.00 x 8.00	617 x 689 x 610 x 203	16 GA/14 GA	22.75 x 22.50	577 x 571	4	AW2424P	20.87 x 20.87	530 x 530
ES-30248-4XS	30.30 x 33.14 x 24.00 x 8.00	770 x 842 x 610 x 203	16 GA/14 GA	29.00 x 22.50	736 x 571	5	AW3024P	26.87 x 20.87	683 x 531
ES-30308-4XS	31.40 x 34.21 x 30.00 x 8.00	798 x 869 x 762 x 203	16 GA/12 GA	29.00 x 28.50	736 x 723	5	ES3030P	26.87 x 26.00	683 x 660
ES-36308-4XS	37.40 x 40.21 x 30.00 x 8.00	950 x 1021 x 762 x 203	14 GA/12 GA	35.75 x 28.50	908 x 723	5	ES3630P	32.87 x 26.00	835 x 660
ES-201612-4XS	20.28 x 24.60 x 16.00 x 12.00	515 x 625 x 406 x 305	16 GA/16 GA	18.75 x 14.50	476 x 368	2	AW2016P	17.00 x 13.00	432 x 330
ES-202012-4XS	20.28 x 24.60 x 20.00 x 12.00	515 x 625 x 508 x 305	16 GA/16 GA	18.75 x 18.50	476 x 469	2	AW2020P	17.00 x 17.00	432 x 432
ES-242412-4XS	24.34 x 28.64 x 24.00 x 12.00	618 x 727 x 610 x 305	16 GA/14 GA	23.75 x 22.50	603 x 571	4	AW2424P	20.87 x 20.87	530 x 530
ES-302412-4XS	30.34 x 34.64 x 24.00 x 12.00	771 x 880 x 610 x 305	16 GA/14 GA	29.00 x 22.50	736 x 571	5	AW3024P	26.87 x 20.87	683 x 530
ES-363012-4XS	37.45 x 41.71 x 30.00 x 12.00	951 x 1059 x 762 x 305	14 GA/12 GA	35.75 x 28.50	908 x 723	5	ES3630P	32.87 x 26.00	835 x 660
ES-363612-4XS	37.55 x 41.81 x 36.00 x 12.00	954 x 1062 x 914 x 305	14 GA/12 GA	35.75 x 34.50	908 x 876	5	ES3636P	32.87 x 32.00	835 x 813
ES-603612-4XS	61.18 x 65.44 x 36.00 x 12.00	1554 x 1662 x 914 x 305	14 GA/12 GA	60.00 x 34.50	1524 x 876	5	ES6036P	56.87 x 32.00	1445 x 813
ES-363016-4XS	37.39 x 43.11 x 30.00 x 16.00	950 x 1095 x 762 x 406	14 GA/12 GA	36.00 x 28.50	914 x 723	5	ES3630P	32.87 x 26.00	835 x 660
ES-483616-4XS	49.59 x 55.31 x 36.00 x 16.00	1260 x 1405 x 914 x 406	14 GA/12 GA	48.00 x 34.50	1219 x 876	5	ES4836P	44.87 x 32.00	1140 x 813

Slope Top Wall-Mount Enclosures Accessories
Discount Schedule: C2

Subclass: TS0

Standoff Spacer Kit

Padlock Handle Kit

Wing Knob Handle Kit

Catalog Number	Description	For use with:
ES-SO1	Standoff Spacer Kit	All slope top enclosures
ES-SO2	Standoff Spacer Kit	All slope top enclosures
ES-SO4	Standoff Spacer Kit	All slope top enclosures
ES-SO6	Standoff Spacer Kit	All slope top enclosures
ES-PLHSS	Padlock Handle Kit	All slope top enclosures
ES-PLSS	Wing Knob Handle Kit	All slope top enclosures
ES3630P	Accessory - Panel	Specific sized slope top enclosures
ES3636P	Accessory - Panel	Specific sized slope top enclosures
ES6036P	Accessory - Panel	Specific sized slope top enclosures
ES4836P	Accessory - Panel	Specific sized slope top enclosures
ES3030P	Accessory - Panel	Specific sized slope top enclosures

Wall-Mount Enclosures
Type 4X Single-Door with 3-Point Locking
Data Sheet and Catalog Number

Application
- Houses electrical controls and instruments
- Intended for indoor or outdoor use where a corrosive environment exists
- Protects against windblown dust and rain, splashing water and hose directed water

Standards
- UL 508A Listed, Type 3R, 4, 4X, 12
- CSA C22.2 No.94 certified, Type 3R, 4, 4X, 12
- Conforms to NEMA Standards for Type 3, 3R, 4, 4X, 12

Finish
- Door and sides of body have a smooth #4 brushed finish

Accessories
- Panels
- Swing-out panel kits
- NEMA terminal kits
- Window kits
- Floor stand kit
- Replacement handle, BD-PKHSS, see page 429

Construction
- Enclosure and door are fabricated from (14) gauge stainless steel
- All continuous welded seams are finished smooth
- Stainless Steel continuous hinge and pin
- Internal 3-point latching with a stainless padlocking handle
- Door has a seamless poured in-place gasket
- Formed lip around enclosure opening diverts liquids and contaminants
- Ground stud provided on door and body
- Print pocket provided
- .375-16 colar studs are provided for mounting optional panel
- External mounting feet

Discount Schedule: C2

Subclass: DG3

Enclosure		Enclosure Size Height x Width x Depth A x B x C		Panel	Conductive Panel	Panel Size Height x Width	
Type 304 Catalog Number	Type 316L Catalog Number	in.	mm	Catalog Number	Catalog Number	in.	mm
24206-4XS3PT	24206-4XSS63PT	24 x 20 x 6	609 x 508 x 152	AW2420P	AW2420GP	20.87 x 16.87	530 x 428
24208-4XS3PT	24208-4XSS63PT	24 x 20 x 8	609 x 508 x 203	AW2420P	AW2420GP	20.87 x 16.87	530 x 428
24248-4XS3PT	24248-4XSS63PT	24 x 24 x 8	609 x 609 x 203	AW2424P	AW2424GP	20.87 x 20.87	530 x 530
30248-4XS3PT	30248-4XSS63PT	30 x 24 x 8	762 x 609 x 203	AW3024P	AW3024GP	26.87 x 20.87	682 x 530
30308-4XS3PT	30308-4XSS63PT	30 x 30 x 8	762 x 762 x 203	AW3030P	AW3030GP	26.87 x 26.87	682 x 682
36248-4XS3PT	36248-4XSS63PT	36 x 24 x 8	914 x 609 x 203	AW3624P	AW3624GP	32.87 x 20.87	835 x 530
36308-4XS3PT	36308-4XSS63PT	36 x 30 x 8	914 x 762 x 203	AW3630P	AW3630GP	32.87 x 26.87	835 x 682
48368-4XS3PT	48368-4XSS63PT	48 x 36 x 8	1219 x 914 x 203	AW4836P	AW4836GP	44.87 x 32.87	1139 x 835
242010-4XS3PT	242010-4XSS63PT	24 x 20 x 10	609 x 508 x 254	AW2420P	AW2420GP	20.87 x 16.87	530 x 428
363010-4XS3PT	363010-4XSS63PT	36 x 30 x 10	914 x 762 x 254	AW3630P	AW3630GP	32.87 x 26.87	835 x 682
423010-4XS3PT	423010-4XSS63PT	42 x 30 x 10	1067 x 762 x 254	AW4230P	AW4230GP	38.87 x 26.87	987 x 682
483610-4XS3PT	483610-4XSS63PT	48 x 36 x 10	1219 x 914 x 254	AW4836P	AW4836GP	44.87 x 32.87	1139 x 835

Continued on following page

Notes: We can provide special sizes, finishes and other modifications. Consult the factory for your special requirements.

Wall-Mount Enclosures
Type 4X Single-Door with 3-Point Locking
Illustration Sheet and Catalog Number

Enclosure		Enclosure Size Height x Width x Depth		Panel	Conductive Panel	Panel Size	
Type 304 Catalog Number	Type 316L Catalog Number	A x B x C in.	mm	Catalog Number	Catalog Number	Height x Width in.	mm
242412-4XS3PT	242412-4XSS63PT	24 x 24 x 12	609 x 609 x 305	AW2424P	AW2424GP	20.87 x 20.87	530 x 530
302412-4XS3PT	302412-4XSS63PT	30 x 24 x 12	762 x 609 x 305	AW3024P	AW3024GP	26.87 x 20.87	682 x 530
363012-4XS3PT	363012-4XSS63PT	36 x 30 x 12	914 x 762 x 305	AW3630P	AW3630GP	32.87 x 26.87	835 x 682
363612-4XS3PT	363612-4XSS63PT	36 x 36 x 12	914 x 914 x 305	AW3636P	AW3636GP	32.87 x 32.87	835 x 835
423612-4XS3PT	423612-4XSS63PT	42 x 36 x 12	1067 x 914 x 305	AW4236P	AW4236GP	38.87 x 32.87	987 x 835
483612-4XS3PT	483612-4XSS63PT	48 x 36 x 12	1219 x 914 x 305	AW4836P	AW4836GP	44.87 x 32.87	1139 x 835
603612-4XS3PT	603612-4XSS63PT	60 x 36 x 12	1524 x 914 x 305	AW6036P	AW6036GP	56.87 x 32.87	1444 x 835
483616-4XS3PT	483616-4XSS63PT	48 x 36 x 16	1219 x 914 x 406	AW4836P	AW4836GP	44.87 x 32.87	1139 x 835
603616-4XS3PT	603616-4XSS63PT	60 x 36 x 16	1524 x 914 x 406	AW6036P	AW6036GP	56.87 x 32.87	1444 x 835

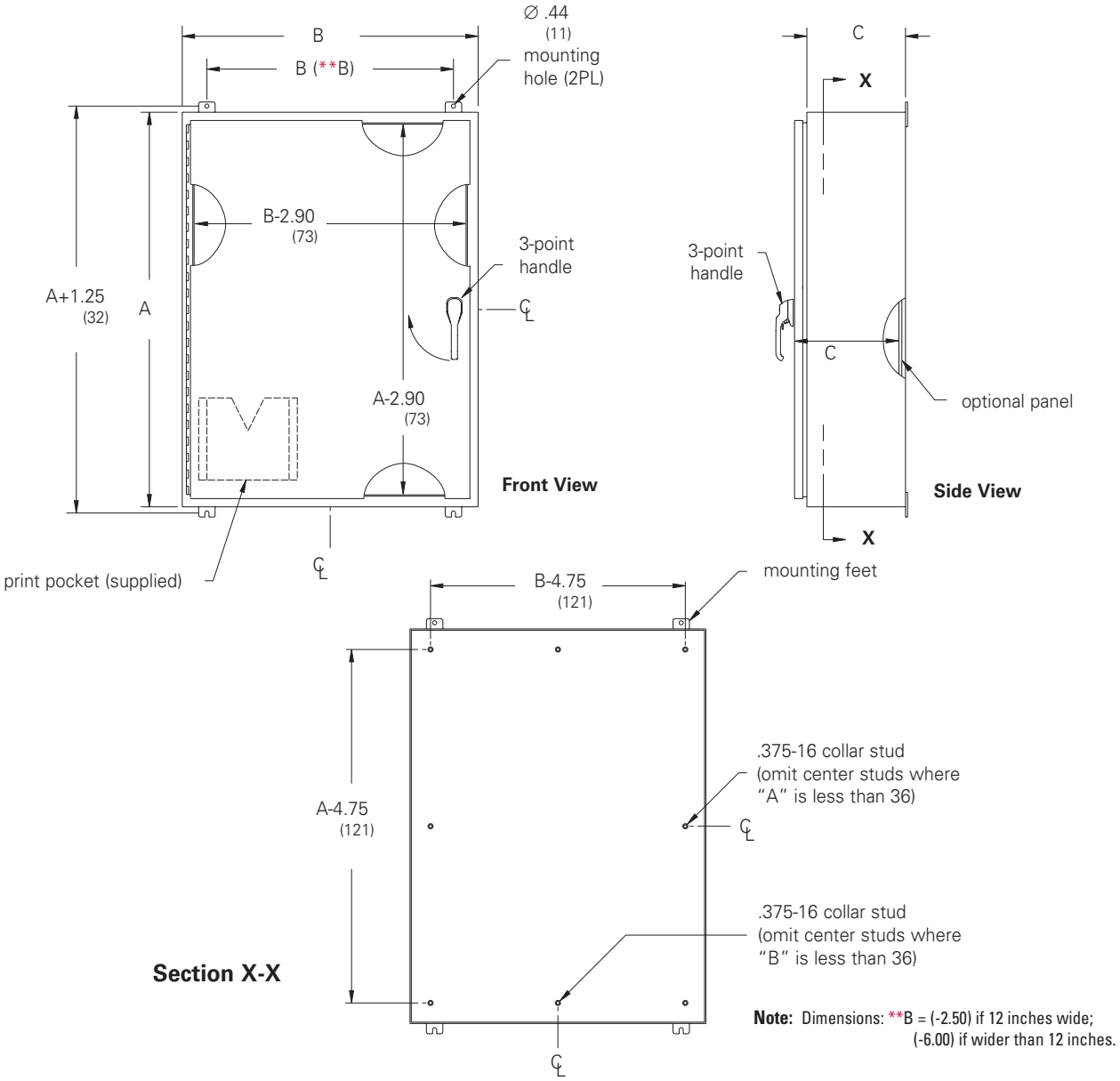

Note: Dimensions: **B = (-2.50) if 12 inches wide; (-6.00) if wider than 12 inches.

Notes: Dimensions are in inches. Millimeters shown are for reference only. Data subject to change without notice.

Wall-Mount Enclosures
Type 4X Double-Door with 3-Point Locking
Data Sheet and Catalog Number

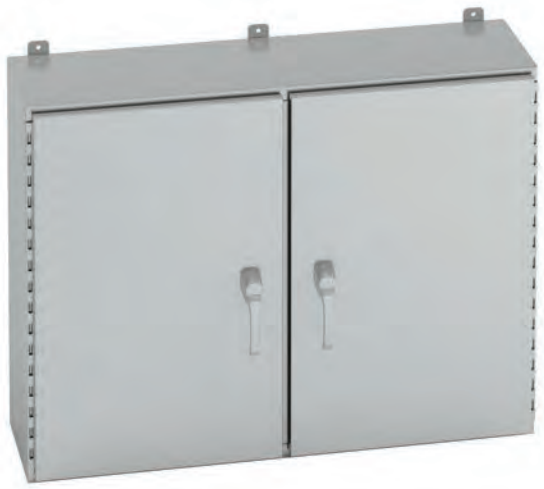

Application
- Houses electrical controls and instruments
- Intended for indoor or outdoor use where a corrosive environment exists
- Protects against corrosion, windblown dust and rain, splashing water and hose directed water

Standards
- UL 508A Listed, Type 3R, 4, 4X, 12
- CSA C22.2 No.94 certified, Type 3R, 4, 4X, 12
- Conforms to NEMA Standards for Type 3, 3R, 4, 4X, 12

Finish
- Door and sides of body have a smooth #4 brushed finish

Accessories
- Panels
- Swing-out panel kits
- Window kits
- Floor stand kit
- Lights
- Replacement handle, BD-PKHSS, see page 429

Construction
- Enclosure and cover are fabricated from (14) Gauge Stainless Steel
- All continuous welded seams are finished smooth
- Stainless steel continuous hinge and pin
- Internal 3-point latching with stainless padlocking handles
- Removable centerpost for easy panel installation
- Doors have a seamless poured in-place gasket
- Formed lip around enclosure opening diverts liquids and contaminants
- Ground stud provided on doors and body
- Print pocket provided
- .375-16 colar studs are provided for mounting optional panel
- External mounting feet

Discount Schedule: C2

Subclass: DG3

Enclosure Catalog Number	Enclosure Size Height x Width x Depth A x B x C in.	mm	Panel Catalog Number	Conductive Panel Catalog Number	Panel Size Height x Width in.	mm
24428-4XSD3PT	24 x 42 x 8	609 x 1067 x 203	AW4224P	—	38.87 x 20.87	987 x 530
24488-4XSD3PT	24 x 48 x 8	609 x 1219 x 203	AW4824P	—	44.87 x 20.87	1139 x 530
304210-4XSD3PT	30 x 42 x 10	762 x 1067 x 254	AW4230P	AW4230GP	38.87 x 26.87	987 x 682
304810-4XSD3PT	30 x 48 x 10	762 x 1219 x 254	AW4830P	AW4830GP	44.87 x 26.87	1139 x 682
306010-4XSD3PT	30 x 60 x 10	762 x 1524 x 254	AW6030P	—	56.87 x 26.87	1444 x 682
364212-4XSD3PT	36 x 42 x 12	914 x 1067 x 305	AW4236P	AW4236GP	38.87 x 32.87	987 x 835
364812-4XSD3PT	36 x 48 x 12	914 x 1219 x 305	AW4836P	AW4836GP	44.87 x 32.87	1139 x 835
366012-4XSD3PT	36 x 60 x 12	914 x 1524 x 305	AW6036P	AW6036GP	56.87 x 32.87	1444 x 835
424212-4XSD3PT	42 x 42 x 12	1067 x 1067 x 305	AW4242P	—	38.87 x 38.87	987 x 987
424812-4XSD3PT	42 x 48 x 12	1067 x 1219 x 305	AW4842P	AW4824GP	44.87 x 38.87	1139 x 987
426012-4XSD3PT	42 x 60 x 12	1067 x 1524 x 305	AW6042P	—	56.87 x 38.87	1444 x 987
484812-4XSD3PT	48 x 48 x 12	1219 x 1219 x 305	AW4848P	—	44.87 x 44.87	1139 x 1139

Notes: We can provide special sizes, finishes and other modifications. Consult the factory for your special requirements.

Wall-Mount Enclosures
Type 4X Double-Door with 3-Point Locking
Illustration Sheet

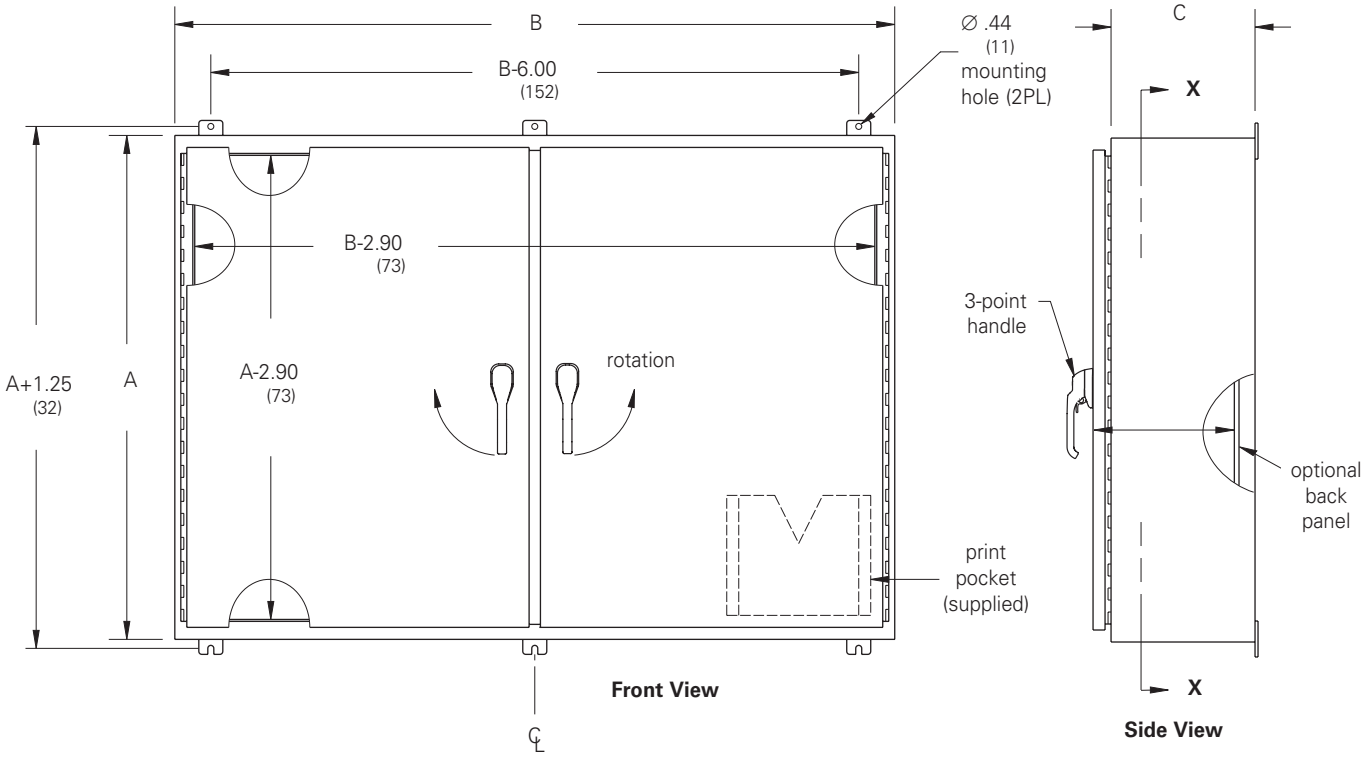

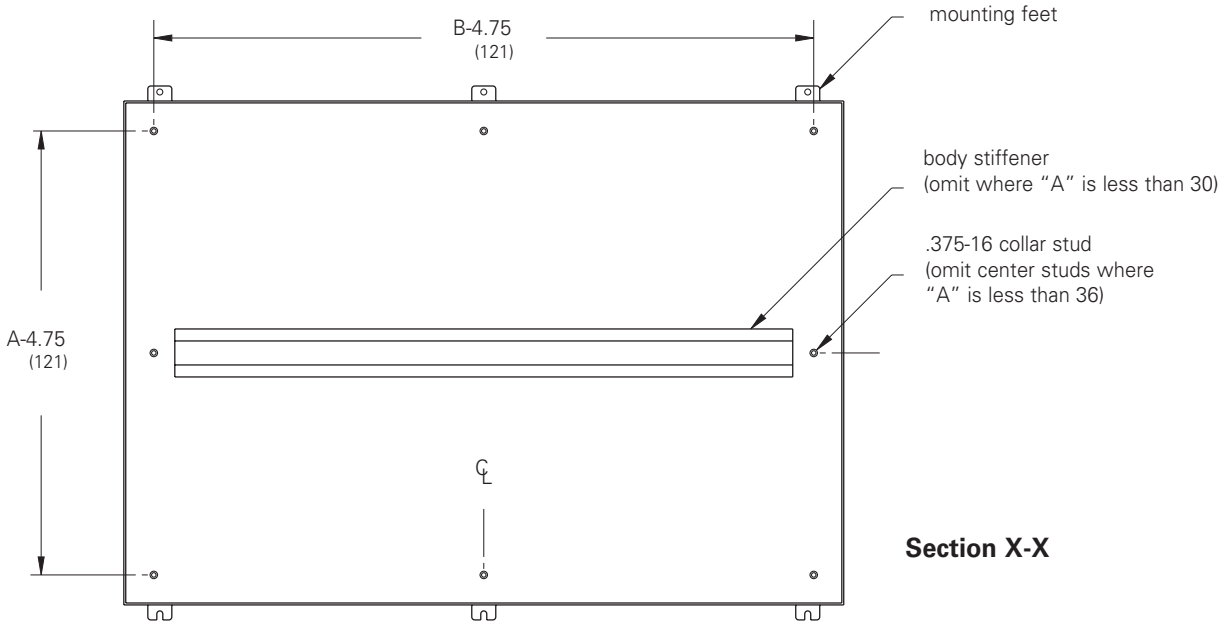

Notes: Dimensions are in inches. Millimeters shown are for reference only. Data subject to change without notice.

Ground-Mount Enclosures
Type 4X Double-Door Floor-Standing
Data Sheet and Catalog Number

Application
- Houses electrical controls and instruments
- Intended for indoor or outdoor use where a corrosive environment exists
- Protects against corrosion, windblown dust and rain, splashing water and hose directed water

Standards
- UL 508A listed, Type 4, Type 4X, and Type 12
- CSA C22.2 No.94 certified, Type 4, Type 4X, and Type 12
- Conforms to NEMA standard for Type 4, Type 4X, and Type 12

Finish
- Doors and sides of body have a smooth #4 brushed finish

Accessories
- Panels
- Leg stabilizer kit
- See Accessories section

Construction
- Enclosure and doors are fabricated from Type 304 or Type 316L stainless steel (for gauge see table)
- All continuous welded seams are finished smooth
- Doors are secured to the body with removable concealed stainless hinges and easy to remove stainless steel door clamps on three (3) sides
- Modern bevel profile on hinge side of enclosure doors
- Print pocket provided
- Each door has a padlock hasp with sealing hole provision
- Doors have a seamless, poured in-place gasket
- Ground stud provided on doors and body
- Removable center post for complete front access
- Heavy gauge angle supports and .375-16 collar studs are provided for mounting optional panel
- Large lifting eyebolts are supplied
- Hole seals are provided to seal enclosure after removal of lifting eyebolts
- Mounting legs are provided for floor mounting

Discount Schedule: C2

Subclass: DJ0 (Type 304)
TU0 (Type 316L)

Enclosure Catalog Number Stainless Steel		Enclosure Size Height x Width x Depth A x B x C		Panel Catalog Number	Body/Door Gauge	Panel Size Height x Width	
Type 304	Type 316L	in.	mm	Steel		in.	mm
624810-4XSFD	624810-4XSS6FD	62.00 x 48.00 x 10.00	1575 x 1219 x 254	AW6048P	12/12	55.87 x 43.87	1419 x 1114
624812-4XSFD	624812-4XSS6FD	62.00 x 48.00 x 12.00	1575 x 1219 x 305	AW6048P	12/12	55.87 x 43.87	1419 x 1114
626012-4XSFD	626012-4XSS6FD	62.00 x 60.00 x 12.00	1575 x 1524 x 305	AW6060P	12/12	55.87 x 55.87	1419 x 1419
746012-4XSFD	746012-4XSS6FD	74.00 x 60.00 x 12.00	1880 x 1524 x 305	AW7260P	12/10	67.87 x 55.87	1724 x 1419
747212-4XSFD	747212-4XSS6FD	74.00 x 72.00 x 12.00	1880 x 1829 x 305	AW7272P	12/10	67.87 x 67.87	1724 x 1724
747224-4XSFD	747224-4XSS6FD	74.00 x 72.00 x 24.00	1880 x 1829 x 610	AW7272P	12/10	67.87 x 67.87	1724 x 1724

Notes: We can provide special sizes, finishes and other modifications. Consult the factory for your special requirements. Dimensions are in inches. Millimeters shown are for reference only. Data subject to change without notice.

Ground-Mount Enclosures
Type 4X Double-Door Floor-Standing
Illustration Sheet

ID = Inside Dimension

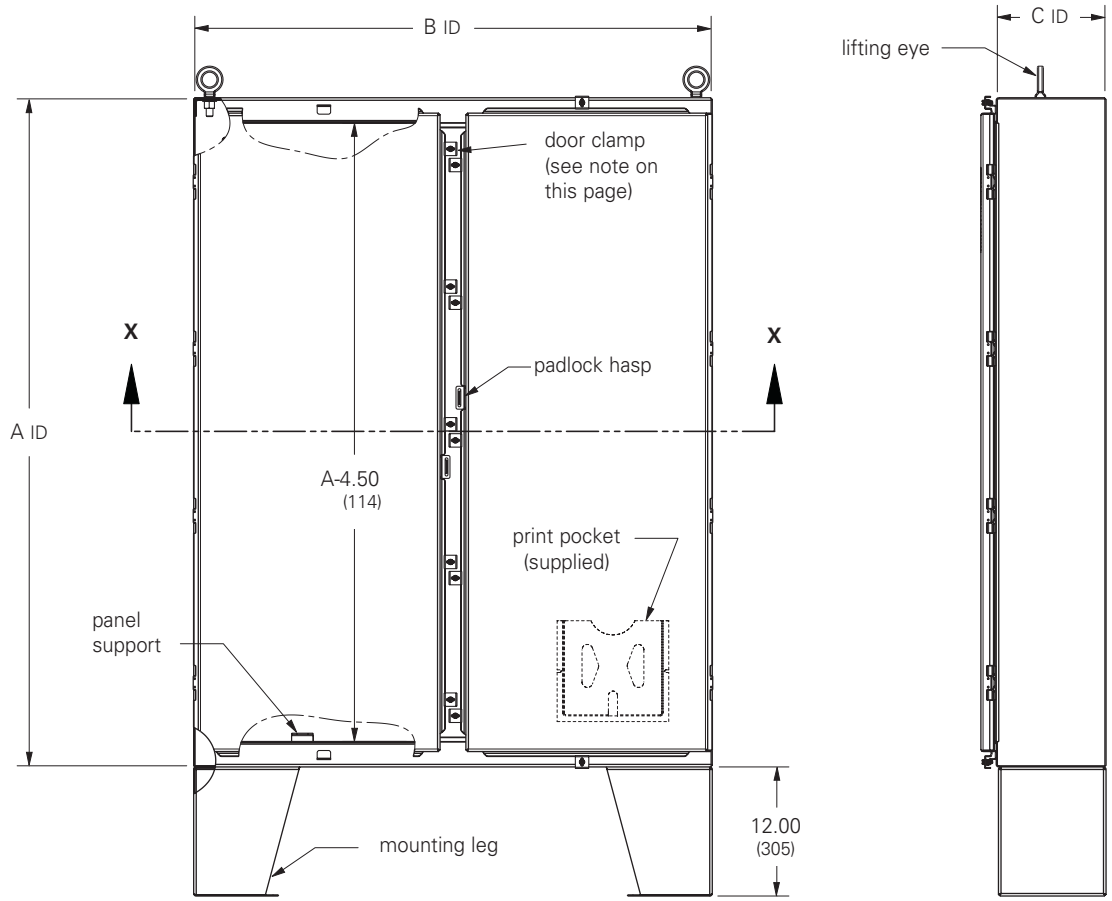

Front View **Side View**

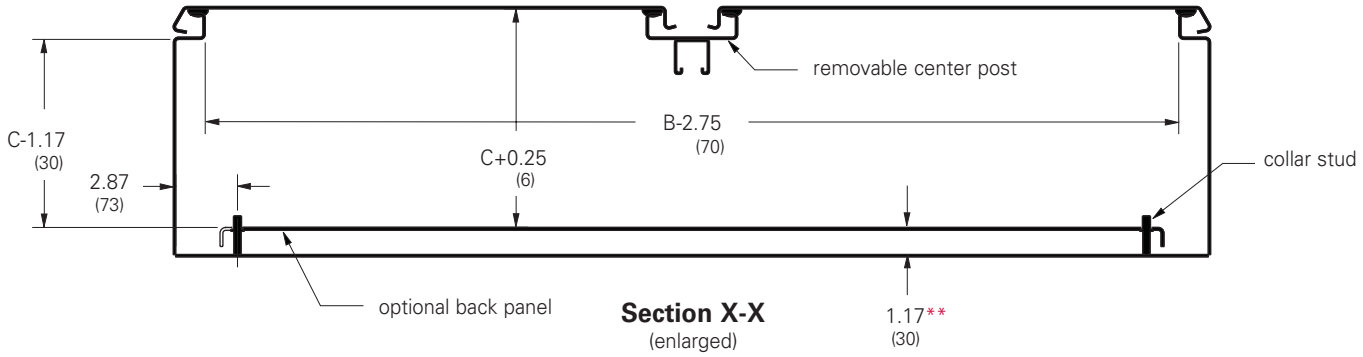

Section X-X
(enlarged)

** From top of panel stud flange to inside of enclosure

Notes: Clamps are mounted along three sides of the enclosure door. Spacing between clamps along side opposite the hinge does not exceed 15 inches. Four lifting eyes are furnished when C dimension is 24" (609 mm). Dimensions are in inches. Millimeters shown are for reference only. Data subject to change without notice.

Ground-Mount Enclosures
Type 4X Double-Door Floor-Standing with Quarter-Turn Latches
Data Sheet and Catalog Number

Application
- Houses electrical controls and instruments
- Intended for indoor or outdoor use where a corrosive environment exists
- Protects against corrosion, windblown dust and rain, splashing water and hose directed water

Standards
- UL 508A listed, Type Type 3R, 4, Type 4X, Type 12
- CSA C22.2 No.94 certified, Type 3R, Type 4, Type 4X, Type 12
- Conforms to NEMA standard for Type 3, Type 3R, Type 4, Type 4X, Type 12

Finish
- Door and sides of body have a smooth #4 brushed finish

Accessories
- Panels
- Panel Support Kit
- Panel Lifting Kit
- Leg stabilizer kit
- Lights
- Window kits

Construction
- Enclosure body (12) gauge and doors (14) gauge are fabricated from Type 304 stainless steel
- All continuous welded seams are finished smooth
- Doors are secured to the body with removable concealed stainless hinges and quarter-turn flush latches on three (3) sides
- Modern bevel profile on both sides of enclosure doors
- Doors have a seamless poured in-place gasket
- Removable centerpost for easy panel installation
- Formed lip around enclosure opening diverts liquids and contaminants
- Ground stud provided on doors and body
- Print pocket provided
- Heavy gauge angle supports and .375-16 collar studs are provided for mounting optional panel
- Large lifting eyebolts
- Hole seals are provided to seal enclosure after removal of lifting eyebolts
- Mounting legs

Discount Schedule: C2

Subclass: DJ2

Enclosure	Enclosure Size Height x Width x Depth A x B x C		Panel Catalog Number	Panel Size Height x Width	
Catalog Number	in.	mm	Steel	in.	mm
604812-4XSFDQT	60.00 x 48.00 x 12.00	1524 x 1219 x 305	**AW6048P**	55.87 x 43.87	1419 x 1114
606012-4XSFDQT	60.00 x 60.00 x 12.00	1524 x 1524 x 305	**AW6060P**	55.87 x 55.87	1419 x 1419
726012-4XSFDQT	72.00 x 60.00 x 12.00	1829 x 1524 x 305	**AW7260P**	67.87 x 55.87	1724 x 1419
727212-4XSFDQT	72.00 x 72.00 x 12.00	1829 x 1829 x 305	**AW7272P**	67.87 x 67.87	1724 x 1724
604818-4XSFDQT	60.00 x 48.00 x 18.00	1524 x 1219 x 457	**AW6048P**	55.87 x 43.87	1419 x 1114
606018-4XSFDQT	60.00 x 60.00 x 18.00	1524 x 1524 x 457	**AW6060P**	55.87 x 55.87	1419 x 1419
726018-4XSFDQT	72.00 x 60.00 x 18.00	1829 x 1524 x 457	**AW7260P**	67.87 x 55.87	1724 x 1419
727218-4XSFDQT	72.00 x 72.00 x 18.00	1829 x 1829 x 457	**AW7272P**	67.87 x 67.87	1724 x 1724
727224-4XSFDQT	72.00 x 72.00 x 24.00	1829 x 1829 x 609	**AW7272P**	67.87 x 67.87	1724 x 1724

Notes: We can provide special sizes, finishes and other modifications. Consult the factory for your special requirements. Dimensions are in inches. Millimeters shown are for reference only. Data subject to change without notice.

Ground-Mount Enclosures
Type 4X Double-Door Floor-Standing with Quarter-Turn Latches
Illustration Sheet

ID = Inside Dimension

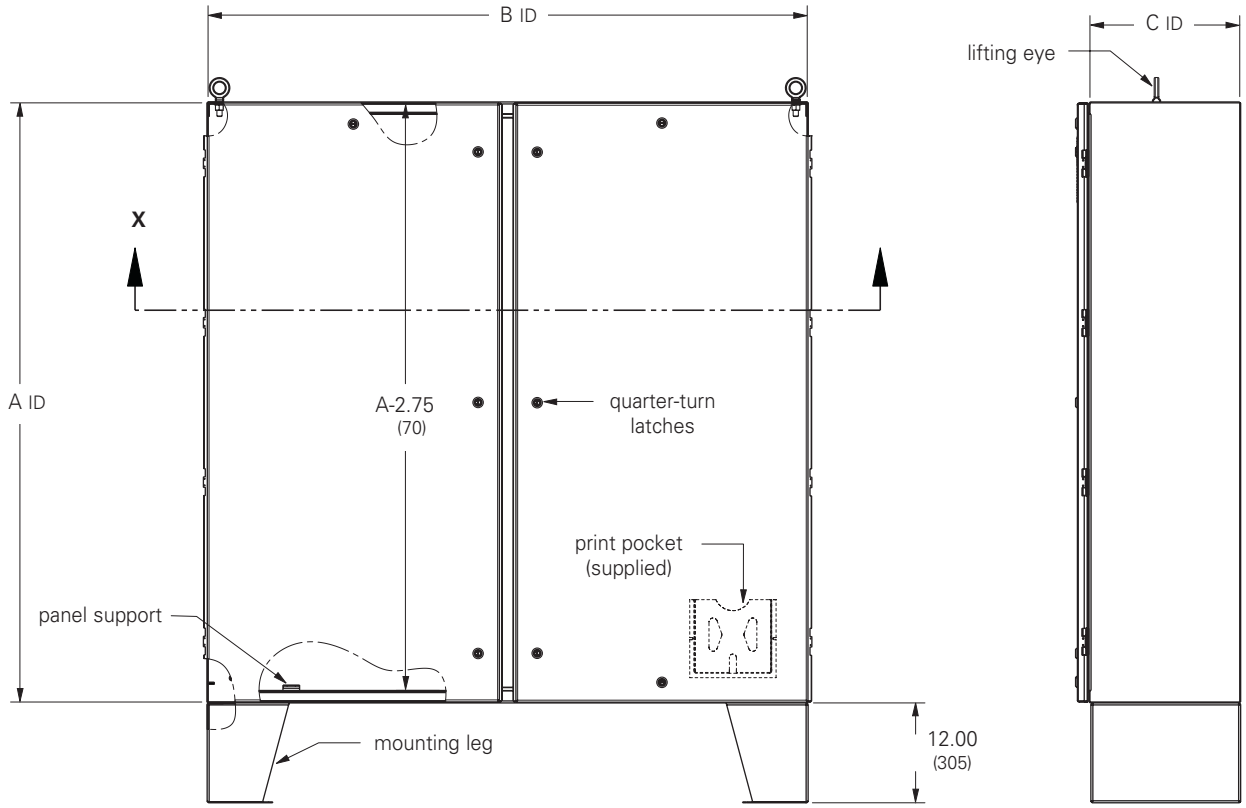

Front View **Side View**

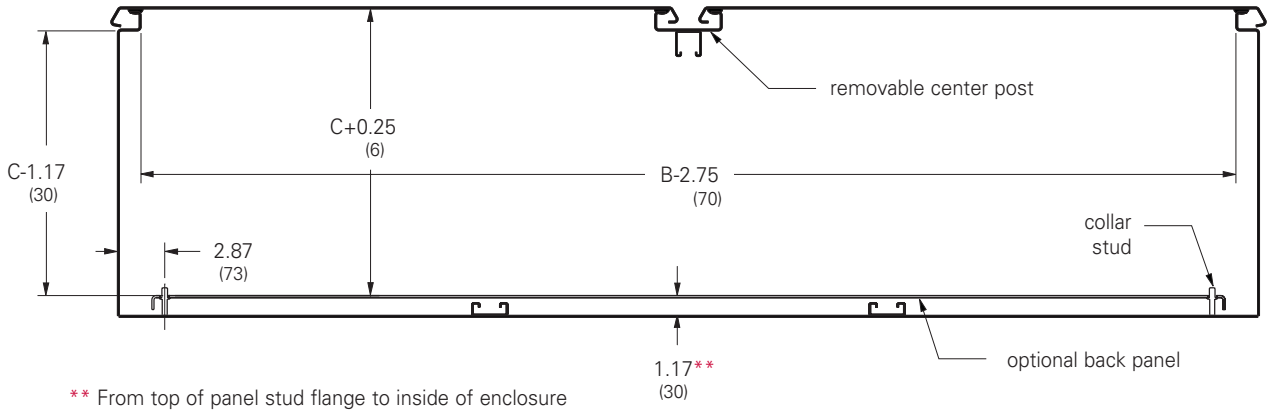

** From top of panel stud flange to inside of enclosure

Section X-X
(enlarged)

Notes: Four lifting eyes are furnished when C dimension is 24" (609 mm).
Dimensions are in inches. Millimeters shown are for reference only. Data subject to change without notice.

Ground-Mount Enclosures
Type 4X Double-Door Floor-Standing with 3-Point Locking
Data Sheet and Catalog Number

Application
- Houses electrical controls and instruments
- Intended for indoor or outdoor use where a corrosive environment exists
- Protects against corrosion, windblown dust and rain, splashing water and hose directed water

Standards
- UL 508A listed, Type 3R, Type 4, Type 4X, Type 12
- CSA C22.2 No.94 certified, Type 3R, Type 4, Type 4X, Type 12
- Conforms to NEMA standard for Type 3, Type 3R, Type 4, Type 4X, Type 12

Finish
- Door and sides of body have a smooth #4 brushed finish

Accessories
- Panels
- Panel Support Kit
- Panel Lifting Kit
- Leg stabilizer kit
- Lights
- Window kits
- See page 429 for replacement handles black handle for Type 304 enclosure, BD-PKHB stainless steel handle for Type 316L enclosure, BD-PKHSS

Construction
- Enclosure and doors are fabricated from Type 304 or Type 316L stainless steel (for gauge see table)
- All continuous welded seams are finished smooth
- Doors are secured to the body with removable concealed stainless hinges and a center locating 3-point key-locking and padlock black handle mechanism
- Modern bevel profile on both sides of enclosure doors
- Stainless handles provided on 316L stainless steel enclosures
- Additional quarter-turn latches provided top and bottom on all enclosure doors
- Doors have a seamless poured in-place gasket
- Removable centerpost for easy panel installation
- Formed lip around enclosure opening diverts liquids and contaminants
- Ground stud provided on doors and body
- Print pocket provided
- Heavy gauge angle supports and .375-16 collar studs are provided for mounting optional panel
- Large lifting eyebolts
- Hole seals are provided to seal enclosure after removal of lifting eyebolts
- Mounting legs

Discount Schedule: C2

Subclass: DJ3

Enclosure Catalog Number Stainless Steel		Enclosure Size Height x Width x Depth A x B x C		Panel Catalog Number	Body/Door Gauge	Panel Size Height x Width	
Type 304 *	Type 316L **	in.	mm	Steel		in.	mm
624812-4XSFD3PT	624812-4XSS6FD3PT	62.00 x 48.00 x 12.00	1575 x 1219 x 305	AW6048P	12/12	55.87 x 43.87	1419 x 1114
626012-4XSFD3PT	626012-4XSS6FD3PT	62.00 x 60.00 x 12.00	1575 x 1524 x 305	AW6060P	12/12	55.87 x 55.87	1419 x 1419
746012-4XSFD3PT	746012-4XSS6FD3PT	74.00 x 60.00 x 12.00	1879 x 1524 x 305	AW7260P	12/10	67.87 x 55.87	1724 x 1419
747212-4XSFD3PT	747212-4XSS6FD3PT	74.00 x 72.00 x 12.00	1879 x 1829 x 305	AW7272P	12/10	67.87 x 67.87	1724 x 1724
624818-4XSFD3PT	624818-4XSS6FD3PT	62.00 x 48.00 x 18.00	1575 x 1219 x 457	AW6048P	12/12	55.87 x 43.87	1419 x 1114
747224-4XSFD3PT	747224-4XSS6FD3PT	74.00 x 72.00 x 24.00	1879 x 1829 x 609	AW7272P	12/10	67.87 x 67.87	1724 x 1724

* Type 304 enclosures come with black handles ** Type 316L enclosures come with stainless steel handle

Notes: We can provide special sizes, finishes and other modifications. Consult the factory for your special requirements. Dimensions are in inches. Millimeters shown are for reference only. Data subject to change without notice.

Ground-Mount Enclosures
Type 4X Double-Door Floor-Standing with 3-Point Locking
Illustration Sheet

ID = Inside Dimension

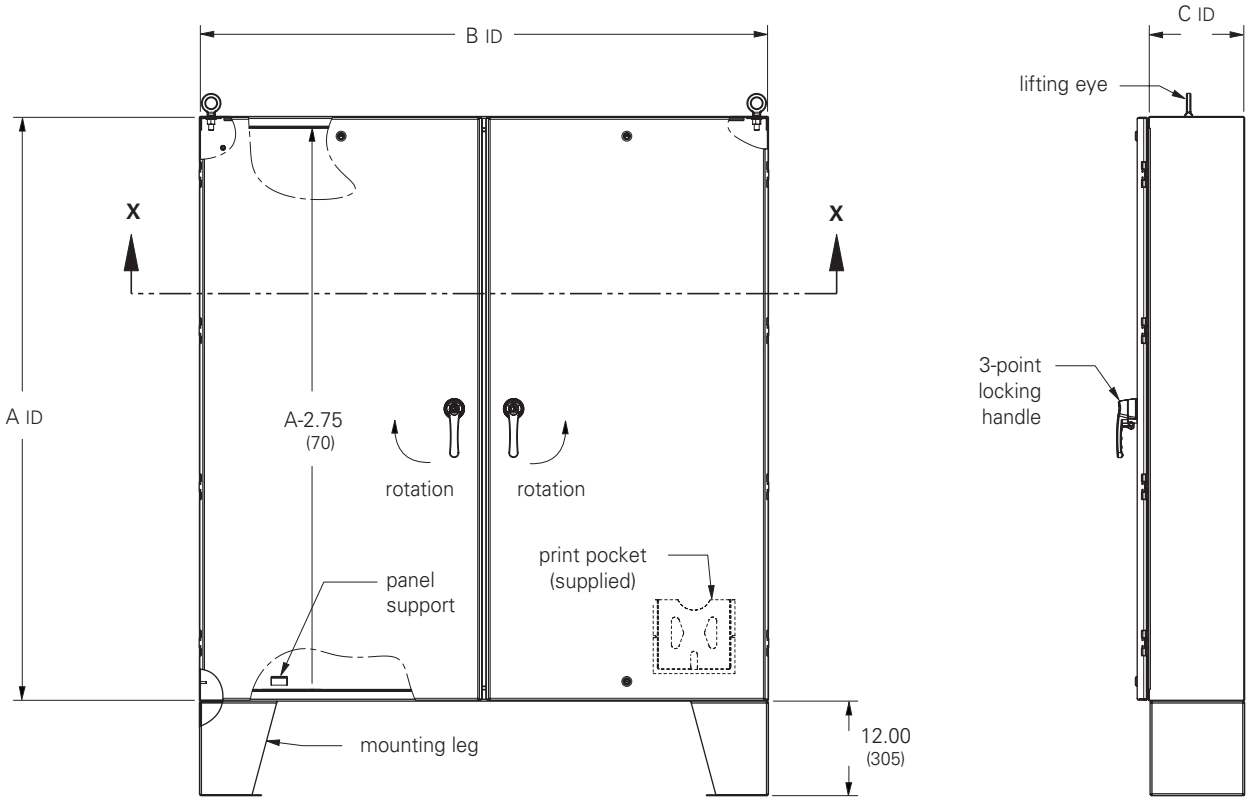

Front View **Side View**

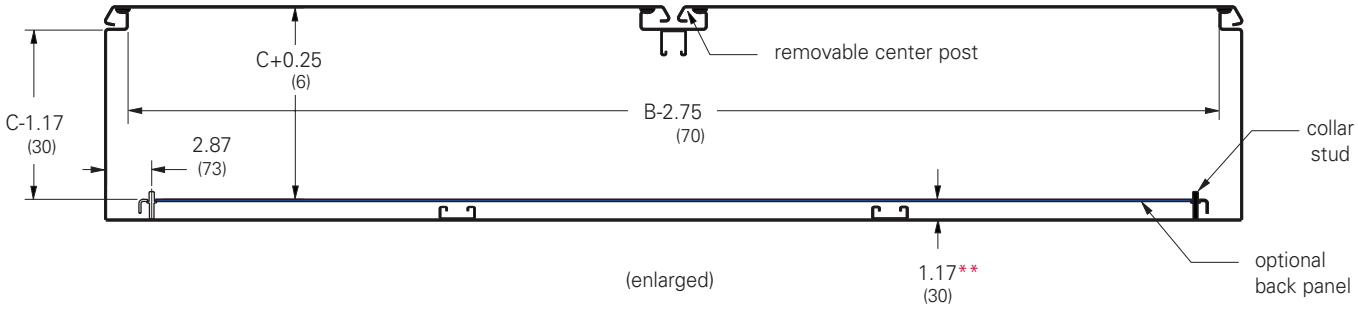

** From top of panel stud flange to inside of enclosure

Notes: Four lifting eyes are furnished when C dimension is 24" (609 mm).
Dimensions are in inches. Millimeters shown are for reference only. Data subject to change without notice.
Additional quarter-turn latch provided on top and bottom of all enclosures.

Ground-Mount Enclosures
Type 4X Single-Door Free-Standing
Data Sheet

Application
- Houses electrical controls and instruments
- Easy access fixed or swing panels for mounting optional equipment
- Intended for indoor or outdoor use
- Protects against corrosion, windblown dust and rain, splashing water and hose directed water

Standards
- UL 508A listed, Type 4, Type 4X, and Type 12
- CSA C22.2 No.94 certified, Type 4, Type 4X, and Type 12
- Conforms to NEMA standard for Type 4, Type 4X, and Type 12
- E.I.A. RS-310-D

Finish
- Door and sides of body have a smooth #4 brushed finish

Accessories
- Full and half panels
- Side and swing panels
- Channel mounting hardware
- Equipment rack mounts
- Touch-up paint
- See Accessories section

Construction
- Enclosure and door are fabricated from (12) gauge, Type 304 or Type 316L stainless steel
- All continuous welded seams are finished smooth
- Door is secured to the body with removable concealed stainless hinges and easy to remove stainless steel door clamps on three (3) sides
- Modern bevel profile on hinge side of enclosure door
- Door has a seamless poured in-place gasket
- Ground stud provided on door and body
- Each door has a padlock hasp with sealing hole provision
- Print pocket provided
- Large lifting eyebolts are supplied
- Hole seals are provided to seal enclosure after removal of lifting eyebolts
- Mounting channels are welded inside for locating panels or rack mount equipment along enclosure depth
- A variety of optional panels and accessories are available (see accessories pages 242-253)

Discount Schedule: C2

Subclass: U40

Enclosure Catalog Number		Enclosure Size Height x Width x Depth A x B x C		D	
Type 304	Type 316L	in.	mm	in.	mm
722518-4XSFS	722518-4XSS6FS	72.00 x 25.00 x 18.00	1829 x 635 x 457	29.12	740
723118-4XSFS	723118-4XSS6FS	72.00 x 31.00 x 18.00	1829 x 787 x 457	29.12	740
723718-4XSFS	723718-4XSS6FS	72.00 x 37.00 x 18.00	1829 x 940 x 457	29.12	740
722524-4XSFS	722524-4XSS6FS	72.00 x 25.00 x 24.00	1829 x 635 x 610	29.12	740
723124-4XSFS	723124-4XSS6FS	72.00 x 31.00 x 24.00	1829 x 787 x 610	29.12	740
723724-4XSFS	723724-4XSS6FS	72.00 x 37.00 x 24.00	1829 x 940 x 610	29.12	740

Notes: We can provide special sizes, finishes and other modifications. Consult the factory for your special requirements.

Ground-Mount Enclosures
Type 4X Single-Door Free-Standing
Catalog Number and Illustration Sheet

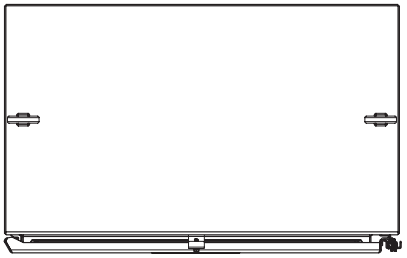

Top View

ID = Inside Dimension

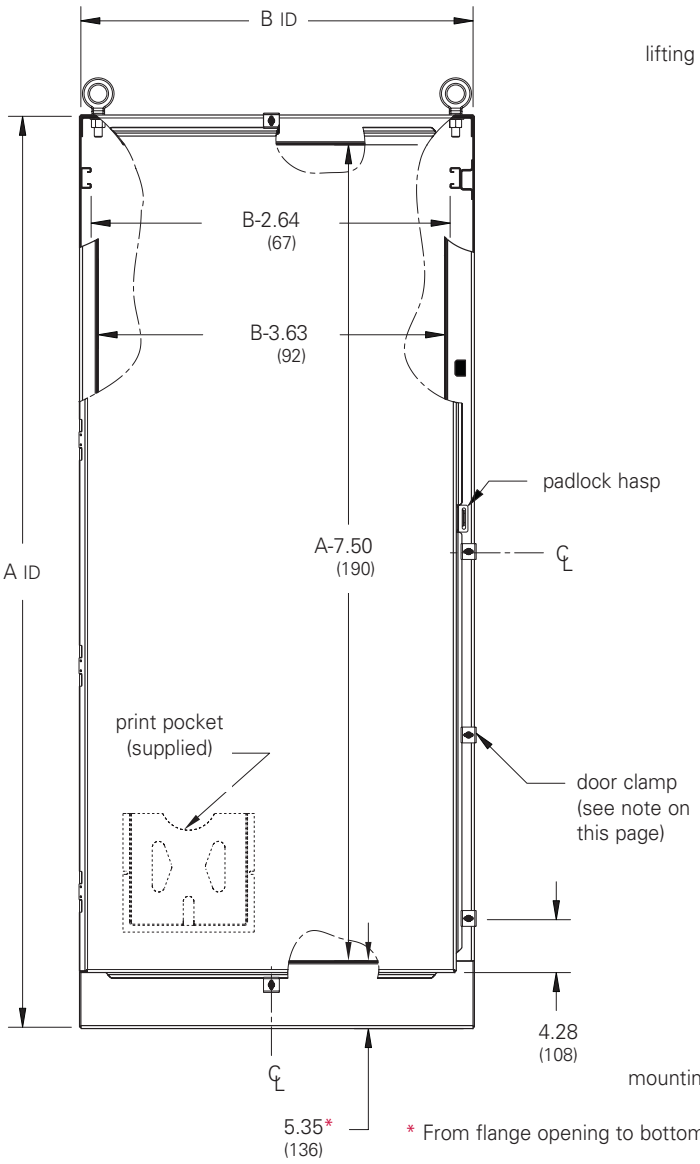

Front View

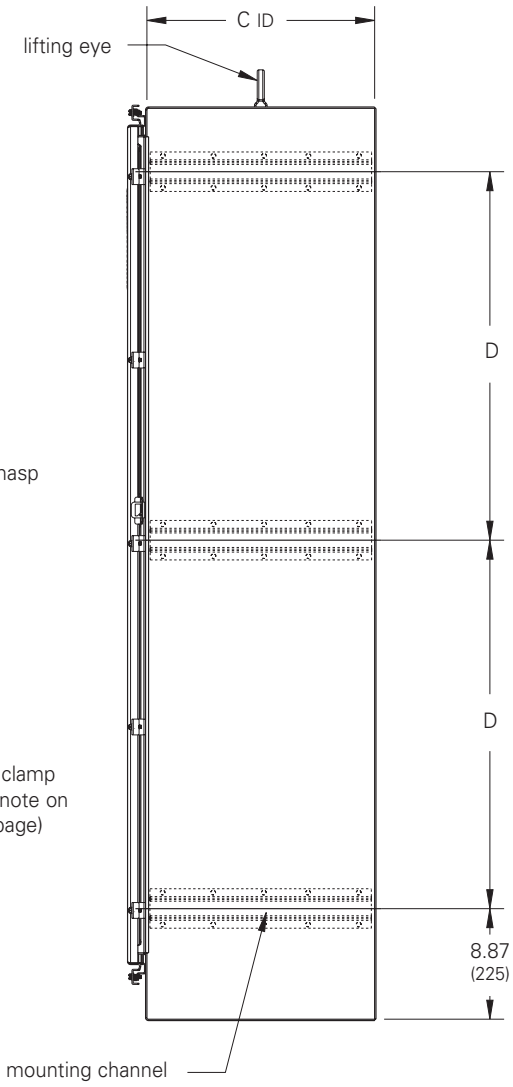

Side View

Notes: Clamps are mounted along three sides of the enclosure door. Spacing between clamps along side opposite the hinge does not exceed 15 inches. Two lifting eyes are furnished on each enclosure. Dimensions are in inches. Millimeters shown are for reference only. Data subject to change without notice.

Ground-Mount Enclosures
Type 4X Single-Door Free-Standing with Quarter-Turn Latches
Data Sheet and Catalog Number

Application
- Houses electrical controls and instruments
- Easy access panels or rack mounts for houseing optional equipment
- Intended for indoor or outdoor use
- Protects against corrosion, windblown dust and rain, splashing water and hose directed water

Standards
- UL 508A listed, Type 3R, Type 4, Type 4X, Type 12
- CSA C22.2 No.94 certified, Type 3R, Type 4, Type 4X, Type 12
- Conforms to NEMA standard for Type 3, Type 3R, Type 4, Type 4X, Type 12
- E.I.A. RS-310-D

Finish
- Door and sides of body have a smooth #4 brushed finish

Accessories
- Full and half panels
- Side and swing panels
- Panel Support Kit
- Panel Lifting Kit
- Channel mounting hardware
- Equipment Rack Mounts
- Lights
- Window kits

Construction
- Enclosure body (12) gauge and door (14) gauge are fabricated from Type 304 stainless steel
- All continuous welded seams are finished smooth
- Door is secured to the body with removable concealed stainless hinges and quarter-turn flush latches on three (3) sides
- Modern bevel profile on both sides of enclosure door
- Door has a seamless poured in-place gasket
- Formed lip around enclosure opening diverts liquids and contaminants
- Ground stud provided on door and body
- Print pocket provided
- Mounting channels are welded inside for locating panels or rack-mount equipment along enclosure depth
- Provision for mounting flourescent light
- Large lifting eyebolts
- Hole seals are provided to seal enclosure after removal of lifting eyebolts

Discount Schedule: C2

Subclass: U42

Enclosure	Enclosure Size Height x Width x Depth A x B x C		D	
Catalog Number	in.	mm	in.	mm
722418-4XSFSQT	72.00 x 24.00 x 18.00	1829 x 609 x 457	29.12	739
723024-4XSFSQT	72.00 x 30.00 x 24.00	1829 x 762 x 609	29.12	739
723624-4XSFSQT	72.00 x 36.00 x 24.00	1829 x 914 x 609	29.12	739

Notes: We can provide special sizes, finishes and other modifications. Consult the factory for your special requirements. Dimensions are in inches. Millimeters shown are for reference only. Data subject to change without notice.

Ground-Mount Enclosures
Type 4X Single-Door Free-Standing with Quarter-Turn Latches
Illustration Sheet

ID = Inside Dimension

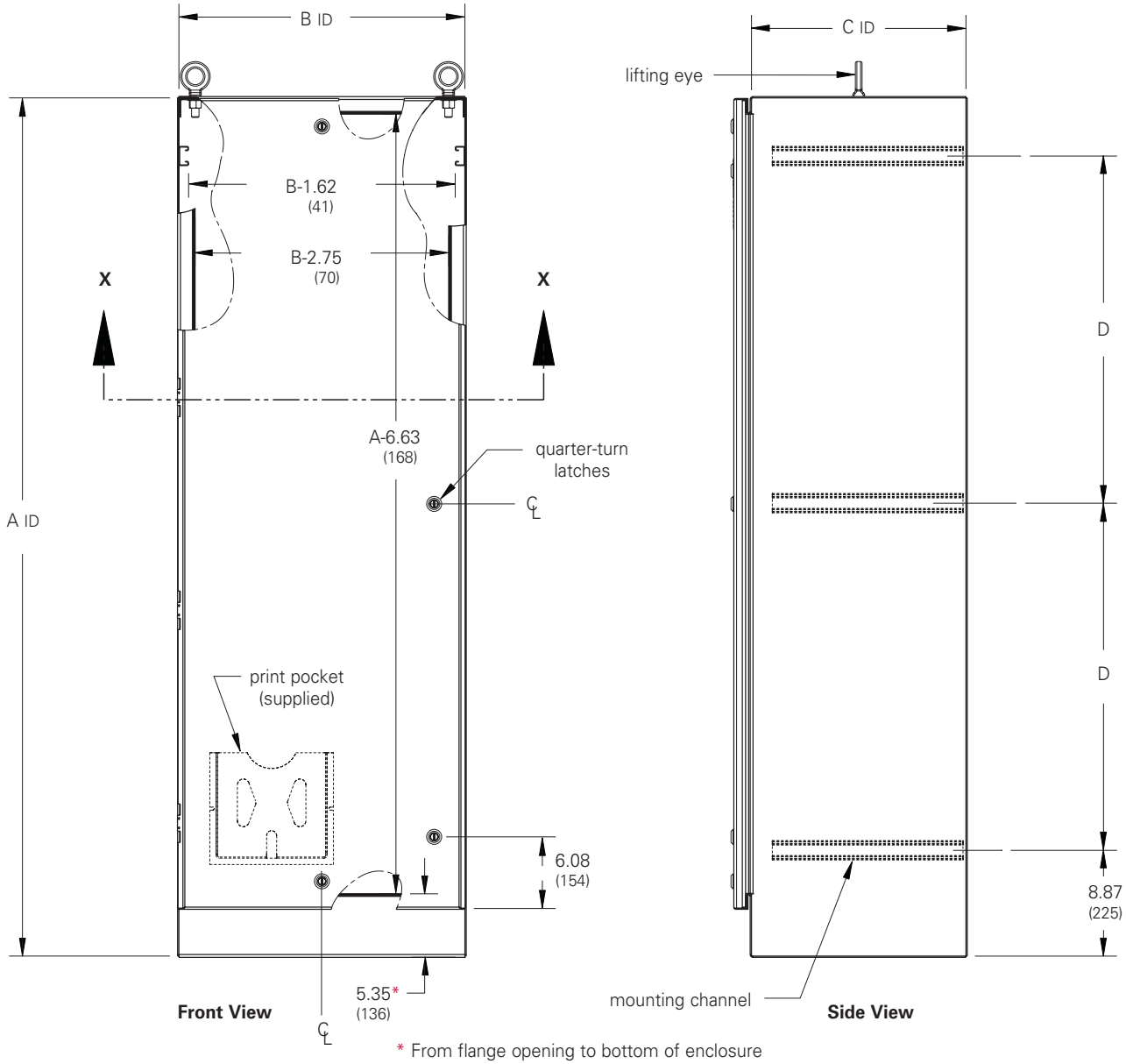

* From flange opening to bottom of enclosure

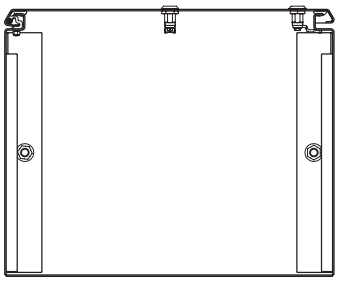

Section X-X

Notes: Two lifting eyes are furnished on each enclosure.
Dimensions are in inches. Millimeters shown are for reference only. Data subject to change without notice.

Ground-Mount Enclosures
Type 4X Single-Door Free-Standing with 3-Point Locking
Data Sheet

Application
- Houses electrical controls and instruments
- Easy access panels or rack mounts for houseing optional equipment
- Intended for indoor or outdoor use
- Protects against corrosion, windblown dust and rain, splashing water and hose directed water

Standards
- UL 508A listed, Type 3R, Type 4, Type 4X, Type 12
- CSA C22.2 No.94 certified, Type 3R, Type 4, Type 4X, Type 12
- Conforms to NEMA standard for Type 3, Type 3R, Type 4, Type 4X, Type 12
- E.I.A. RS-310-D

Finish
- Door and sides of body have a smooth #4 brushed finish

Accessories
- Full and half panels
- Side and swing panels
- Panel Support Kit
- Panel Lifting Kit
- Channel mounting hardware
- Equipment Rack Mounts
- Lights
- Window kits
- Replacement handle (black), BD-PKHB, see page 429

Construction
- Enclosure and doors are fabricated from Type 304 stainless steel (for gauge see table)
- All continuous welded seams are finished smooth
- Door is secured to the body with removable concealed stainless hinges and a center locating 3-point key-locking and padlock handle mechanism
- Modern bevel profile on both sides of enclosure door
- Additional quarter-turn latches provided top and bottom on all enclosure doors
- Door has a seamless poured in-place gasket
- Formed lip around enclosure opening diverts liquids and contaminants
- Ground stud provided on door and body
- Print pocket provided
- Mounting channels are welded inside for locating panels or rack-mount equipment along enclosure depth
- Provision for mounting flourescent light
- Large lifting eyebolts
- Hole seals are provided to seal enclosure after removal of lifting eyebolts

Discount Schedule: C2
Subclass: U43

Enclosure Catalog Number	Enclosure Size Height x Width x Depth A x B x C in.	mm	Body/Door Gauge	D in.	mm
602418-4XSFS3PT	60.00 x 24.00 x 18.00	1524 x 609 x 457	12/12	23.12	587
722418-4XSFS3PT	72.00 x 24.00 x 18.00	1829 x 609 x 457	12/12	29.12	739
723018-4XSFS3PT	72.00 x 30.00 x 18.00	1829 x 762 x 457	12/12	29.12	739
723618-4XSFS3PT	72.00 x 36.00 x 18.00	1829 x 914 x 457	12/12	29.12	739
902420-4XSFS3PT	90.00 x 24.00 x 20.00	2286 x 609 x 508	12/10	38.12	968
903620-4XSFS3PT	90.00 x 36.00 x 20.00	2286 x 914 x 508	12/10	38.12	968
603624-4XSFS3PT	60.00 x 36.00 x 24.00	1524 x 914 x 609	12/12	23.12	587
722424-4XSFS3PT	72.00 x 24.00 x 24.00	1829 x 609 x 609	12/12	29.12	739
723024-4XSFS3PT	72.00 x 30.00 x 24.00	1829 x 762 x 609	12/12	29.12	739
723624-4XSFS3PT	72.00 x 36.00 x 24.00	1829 x 914 x 609	12/12	29.12	739
903624-4XSFS3PT	90.00 x 36.00 x 24.00	2286 x 914 x 609	12/10	38.12	968
723630-4XSFS3PT	72.00 x 36.00 x 30.00	1829 x 914 x 762	12/12	29.12	739
723636-4XSFS3PT	72.00 x 36.00 x 36.00	1829 x 914 x 914	12/12	29.12	739
903636-4XSFS3PT	90.00 x 36.00 x 36.00	2286 x 914 x 914	12/10	38.12	968

Notes: We can provide special sizes, finishes and other modifications. Consult the factory for your special requirements. Dimensions are in inches. Millimeters shown are for reference only. Data subject to change without notice.

Ground-Mount Enclosures
Type 4X Single-Door Free-Standing with 3-Point Locking
Illustration Sheet and Catalog Number

ID = Inside Dimension

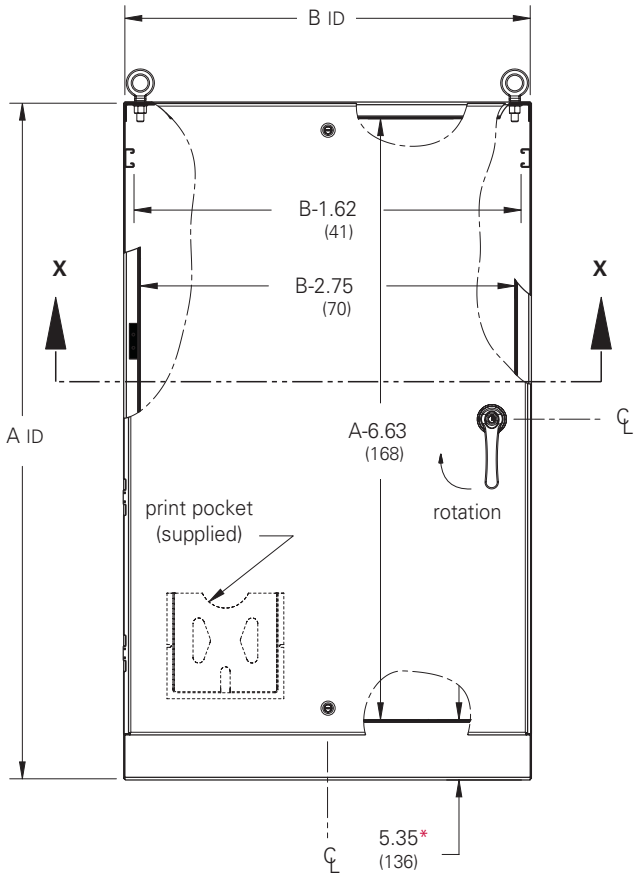

Front View

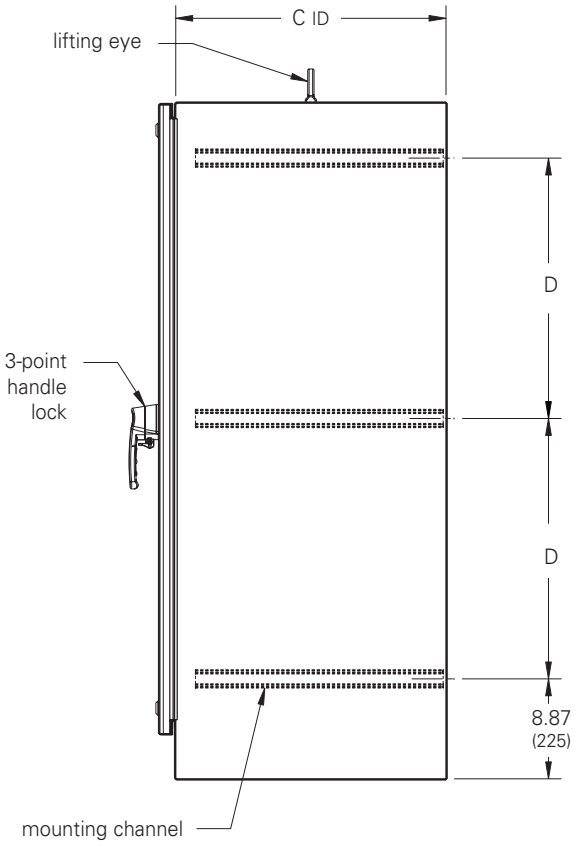

Side View

* From flange opening to bottom of enclosure

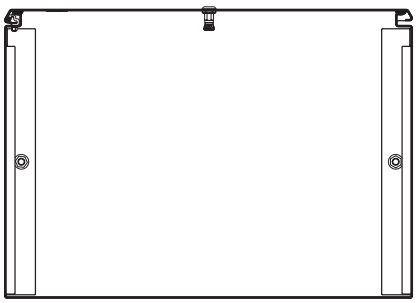

Section X-X

Notes: Four lifting eyes are furnished when C dimension is 30" (762 mm).
Dimensions are in inches. Millimeters shown are for reference only. Data subject to change without notice.
Additional quarter-turn latch provided on top and bottom of all enclosures.

Ground-Mount Enclosures
Type 4X Single-Door Dual Access Free-Standing with 3-Point Locking
Data Sheet

Application
- Houses electrical controls and instruments
- Easy access panels or rack mounts for houseing optional equipment
- Intended for indoor or outdoor use
- Protects against corrosion, windblown dust and rain, splashing water and hose directed water

Standards
- UL 508A listed, Type 3R, Type 4, Type 4X, Type 12
- CSA C22.2 No.94 certified, Type 3R, Type 4, Type 4X, Type 12
- Conforms to NEMA standard for Type 3, Type 3R, Type 4, Type 4X, Type 12
- E.I.A. RS-310-D

Finish
- Door and sides of body have a smooth #4 brushed finish

Accessories
- Full and half panels
- Side and swing panels
- Panel Support Kit
- Panel Lifting Kit
- Channel mounting hardware
- Equipment Rack Mounts
- Lights
- Window kits
- Replacement handle (black), BD-PKHB, see page 429

Construction
- Enclosure and doors are fabricated from Type 304 stainless steel (for gauge see table)
- All continuous welded seams are finished smooth
- Doors are secured to the body with removable concealed hinges and a center locating 3-point key-locking and padlock handle mechanism
- Modern bevel profile on both sides of enclosure door
- Additional quarter-turn latches provided top and bottom on all enclosure doors
- Doors have a seamless poured in-place gasket
- Formed lip around enclosure openings to diverts liquids and contaminants
- Dual-access construction available for back-to-back panel and equipment mounting
- Ground studs provided on doors and body
- Print pockets provided
- Mounting channels are welded inside for locating panels or rack-mount equipment along enclosure depth
- Provisions for mounting flourescent light
- Large lifting eyebolts
- Hole seals are provided to seal enclosure after removal of lifting eyebolts

Discount Schedule: C2

Subclass: U43

Notes: We can provide special sizes, finishes and other modifications. Consult the factory for your special requirements. Dimensions are in inches. Millimeters shown are for reference only. Data subject to change without notice.

Ground-Mount Enclosures
Type 4X Single-Door Dual Access Free-Standing with 3-Point Locking
Illustration Sheet and Catalog Number

Enclosure Catalog Number	Enclosure Size Height x Width x Depth A x B x C in.	mm	Body/Door Gauge	D in.	mm
722424-4XSFSDA3PT	72.00 x 24.00 x 24.00	1829 x 609 x 609	12/12	29.12	739
723024-4XSFSDA3PT	72.00 x 30.00 x 24.00	1829 x 762 x 609	12/12	29.12	739
723624-4XSFSDA3PT	72.00 x 36.00 x 24.00	1829 x 914 x 609	12/12	29.12	739
903624-4XSFSDA3PT	90.00 x 36.00 x 24.00	2286 x 914 x 609	12/10	38.12	968
722430-4XSFSDA3PT	72.00 x 24.00 x 30.00	1829 x 609 x 762	12/12	29.12	739
722436-4XSFSDA3PT	72.00 x 24.00 x 36.00	1829 x 609 x 914	12/12	29.12	739
723636-4XSFSDA3PT	72.00 x 36.00 x 36.00	1829 x 914 x 914	12/12	29.12	739
903636-4XSFSDA3PT	90.00 x 36.00 x 36.00	2286 x 914 x 914	12/10	38.12	968

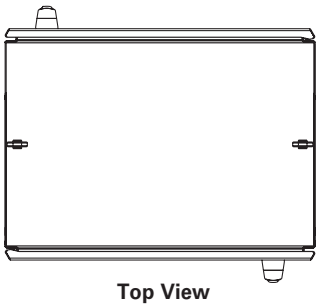

Top View

ID = Inside Dimension

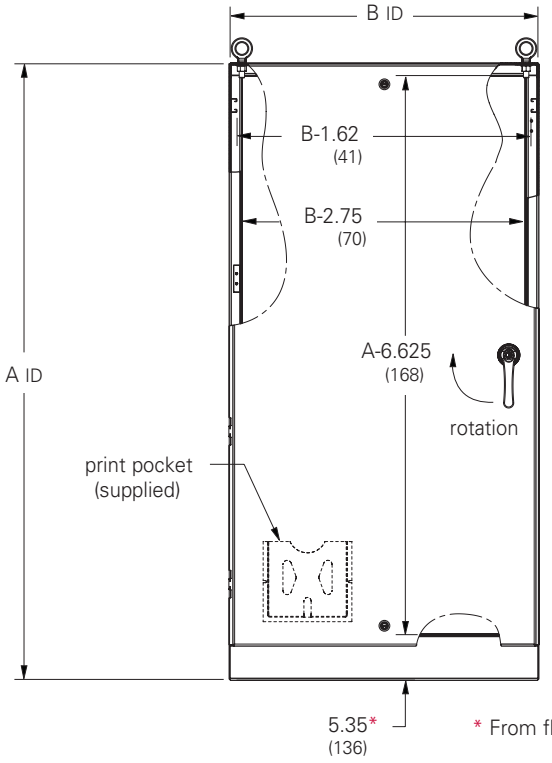

* From flange opening to bottom of enclosure

Front View

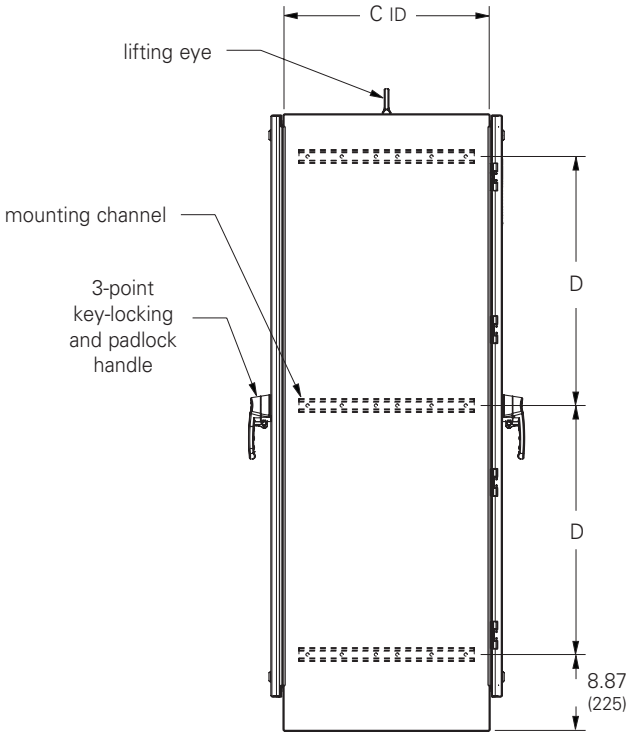

Side View

Notes: Four lifting eyes are furnished when C dimension is 30" (762 mm) or larger.
Dimensions are in inches. Millimeters shown are for reference only. Data subject to change without notice.
Additional quarter-turn latch provided on top and bottom of all enclosures.

Ground-Mount Enclosures
Type 4X Double-Door Free-Standing with 3-Point Locking
Data Sheet

Application
- Houses electrical controls and instruments
- Easy access panels or rack mounts for houseing optional equipment
- Intended for indoor or outdoor use
- Protects against corrosion, windblown dust and rain, splashing water and hose directed water

Standards
- UL 508A listed, Type 3R, Type Type 4, Type 4X, Type 12
- CSA C22.2 No.94 certified, Type 3R, Type 4, Type 4X, Type 12
- Conforms to NEMA standard for Type 3, Type 3R, Type 4, Type 4X, Type 12
- E.I.A. RS-310-D

Finish
- Doors and sides of body have a smooth #4 brushed finish

Accessories
- Full and half panels
- Side and swing panels
- Panel Support Kit
- Panel Lifting Kit
- Channel mounting hardware
- Equipment Rack Mounts
- Lights
- Window kits
- Replacement handle (black), BD-PKHB, see page 429

Construction
- Enclosure and doors are fabricated from Type 304 stainless steel (for gauge see table)
- All continuous welded seams are finished smooth
- Doors are secured to the body with removable concealed stainless hinges and a center locating 3-point key-locking and padlock handle mechanism
- Modern bevel profile on both sides of enclosure doors
- Additional quarter-turn latches provided top and bottom on all enclosure doors
- Doors have a seamless poured in-place gasket
- Formed lip around enclosure openings to diverts liquids and contaminants
- Ground studs provided on doors and body
- Removable centerpost for easy panel installation
- Print pockets provided
- Mounting channels are welded inside for locating panels or rack-mount equipment along enclosure depth
- Provisions for mounting flourescent light
- Large lifting eyebolts
- Hole seals are provided to seal enclosure after removal of lifting eyebolts

Discount Schedule: C2

Subclass: U43

Enclosure Catalog Number	Enclosure Size Height x Width x Depth A x B x C in.	mm	Body/Door Gauge	D in.	mm
604818-4XSFSD3PT	60.00 x 48.00 x 18.00	1524 x 1219 x 457	12/12	23.12	587
724818-4XSFSD3PT	72.00 x 48.00 x 18.00	1829 x 1219 x 457	12/12	29.12	739
726018-4XSFSD3PT	72.00 x 60.00 x 18.00	1829 x 1524 x 457	12/12	29.12	739
727218-4XSFSD3PT	72.00 x 72.00 x 18.00	1829 x 1829 x 457	12/12	29.12	739
904820-4XSFSD3PT	90.00 x 48.00 x 20.00	2286 x 1219 x 508	12/10	38.12	968
907220-4XSFSD3PT	90.00 x 72.00 x 20.00	2286 x 1829 x 508	12/10	38.12	968
724824-4XSFSD3PT	72.00 x 48.00 x 24.00	1829 x 1219 x 609	12/12	29.12	739
726024-4XSFSD3PT	72.00 x 60.00 x 24.00	1829 x 1524 x 609	12/12	29.12	739
727224-4XSFSD3PT	72.00 x 72.00 x 24.00	1829 x 1829 x 609	12/12	29.12	739
907224-4XSFSD3PT	90.00 x 72.00 x 24.00	2286 x 1829 x 609	12/10	38.12	968
726036-4XSFSD3PT	72.00 x 60.00 x 36.00	1829 x 1524 x 914	12/12	29.12	739
907236-4XSFSD3PT	90.00 x 72.00 x 36.00	2286 x 1829 x 914	12/10	38.12	968

Notes: We can provide special sizes, finishes and other modifications. Consult the factory for your special requirements.

Ground-Mount Enclosures
Type 4X Double-Door Free-Standing with 3-Point Locking
Illustration Sheet and Catalog Number

ID = Inside Dimension

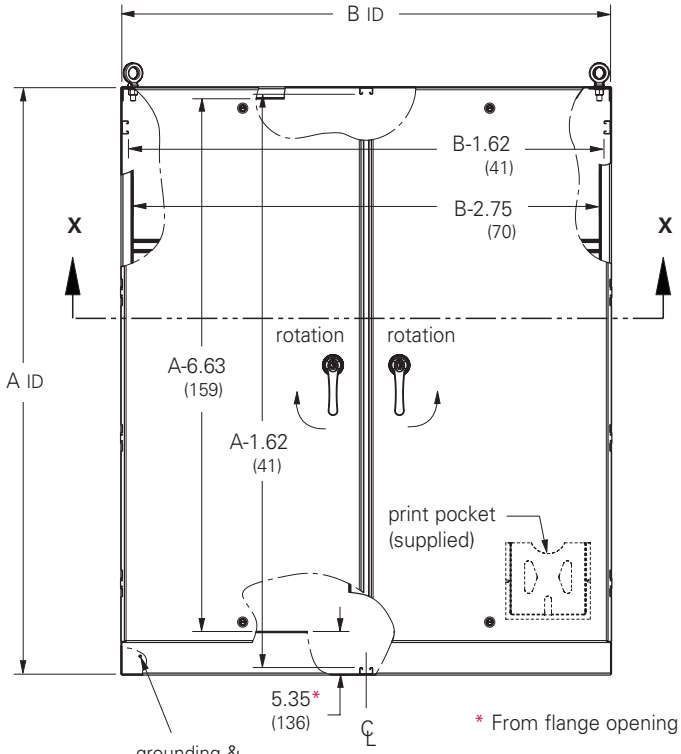

Front View

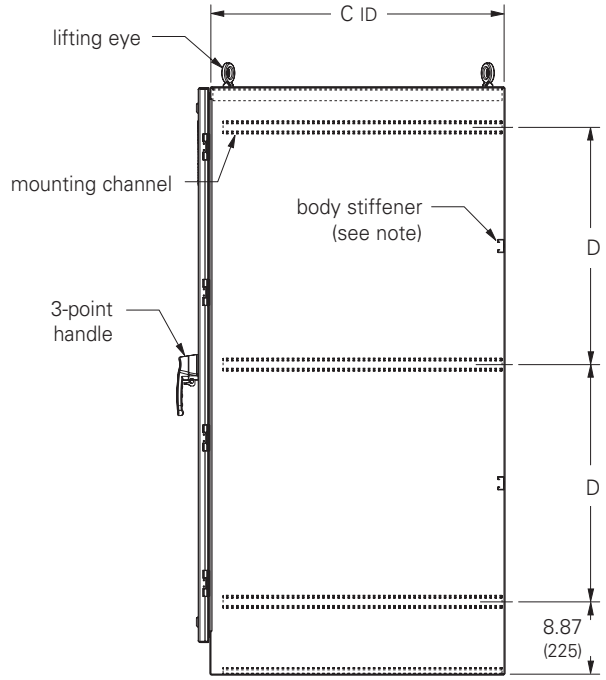

Side View

* From flange opening to bottom of enclosure

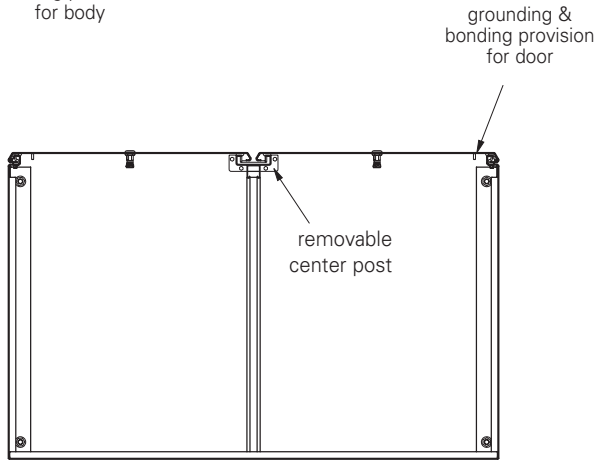

Section X-X

Notes: Four lifting eyes are furnished when C dimension is 24" (609 mm) or larger.
Dimensions are in inches. Millimeters shown are for reference only. Data subject to change without notice.
Additional quarter-turn latch provided on top and bottom of all enclosures.

Ground-Mount Enclosures
Type 4X Double-Door Dual Access Free-Standing with 3-Point Locking
Data Sheet

Application
- Houses electrical controls and instruments
- Easy access panels or rack mounts for houseing optional equipment
- Intended for indoor or outdoor use
- Protects against corrosion, windblown dust and rain, splashing water and hose directed water

Standards
- UL 508A listed, Type 3R, 4, 4X, 12
- CSA C22.2 No.94 certified, Type 3R, 4, 4X, 12
- Conforms to NEMA standard for Type 3, 3R, 4, 4X, 12
- E.I.A. RS-310-D

Finish
- Doors and sides of body have a smooth #4 brushed finish

Accessories
- Full and half panels
- Side and swing panels
- Panel Support Kit
- Panel Lifting Kit
- Channel mounting hardware
- Equipment Rack Mounts
- Lights
- Window kits
- Replacement handle (black), BD-PKHB, see page 429

Construction
- Enclosure and doors are fabricated from Type 304 stainless steel (for gauge see table)
- All continuous welded seams are finished smooth
- Doors are secured to the body with removable concealed stainless hinges and a center locating 3-point key-locking and padlock handle mechanism
- Modern bevel profile on both sides of enclosure doors
- Additional quarter-turn latches provided top and bottom on all enclosure doors
- Doors have a seamless poured in-place gasket
- Formed lip around enclosure openings to diverts liquids and contaminants
- Ground studs provided on doors and body
- Removable centerpost for easy panel installation
- Dual-access construction available for back-to-back panel and equipment mounting
- Print pockets provided
- Mounting channels are welded inside for locating panels or rack-mount equipment along enclosure depth
- Provisions for mounting flourescent light
- Large lifting eyebolts
- Hole seals are provided to seal enclosure after removal of lifting eyebolts

Discount Schedule: C2

Subclass: U43

Notes: We can provide special sizes, finishes and other modifications. Consult the factory for your special requirements.

Ground-Mount Enclosures
Type 4X Double-Door Dual Access Free-Standing with 3-Point Locking
Illustration Sheet and Catalog Number

Enclosure Catalog Number	Enclosure Size Height x Width x Depth A x B x C in.	mm	Body/Door Gauge in.	D in.	mm
724824-4XSFSDDA3PT	72.00 x 48.00 x 24.00	1829 x 1219 x 609	12/12	29.12	739
726024-4XSFSDDA3PT	72.00 x 60.00 x 24.00	1829 x 1524 x 609	12/12	29.12	739
727224-4XSFSDDA3PT	72.00 x 72.00 x 24.00	1829 x 1829 x 609	12/12	29.12	739
907224-4XSFSDDA3PT	90.00 x 72.00 x 24.00	2286 x 1829 x 609	12/10	38.12	968
726036-4XSFSDDA3PT	72.00 x 60.00 x 36.00	1829 x 1524 x 609	12/12	29.12	739

ID = Inside Dimension

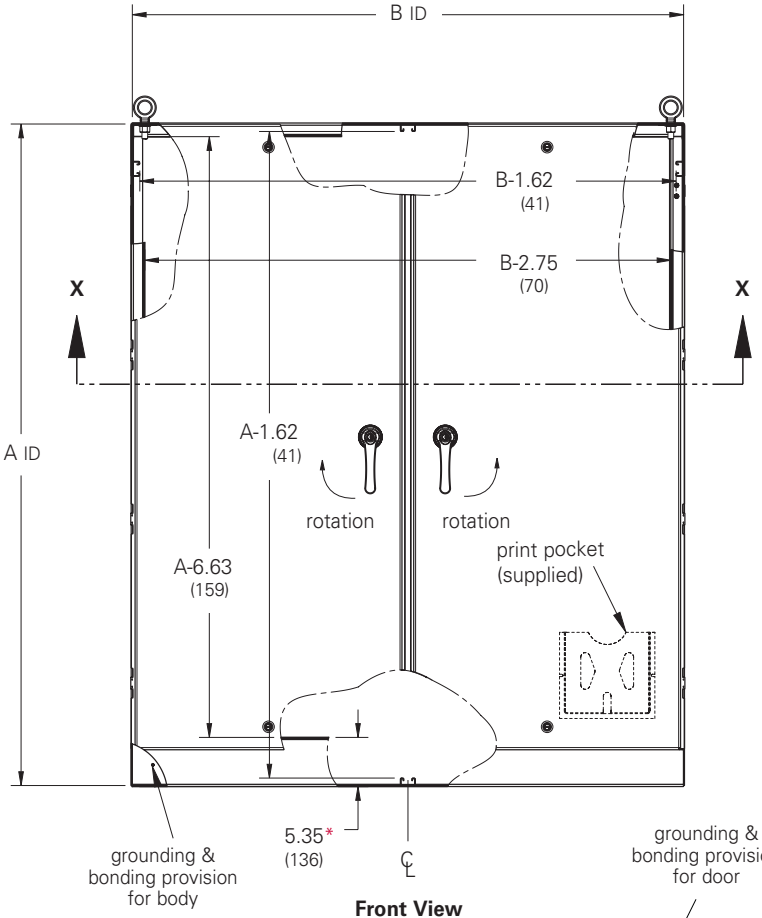

Front View

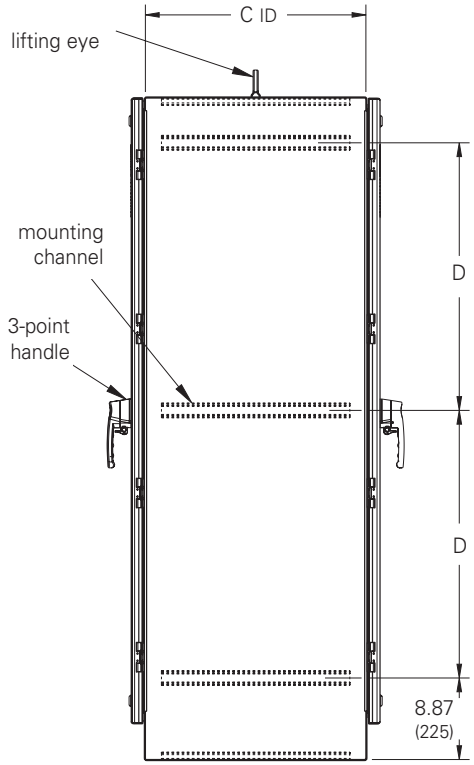

Side View

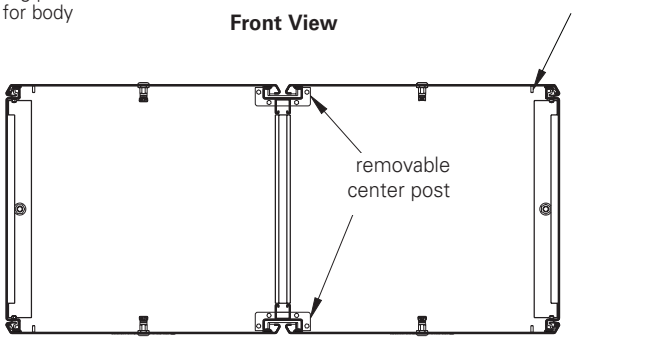

Section X-X

* From flange opening to bottom of enclosure

Notes: Four lifting eyes are furnished when C dimension is 30" (762 mm) or larger.
Dimensions are in inches. Millimeters shown are for reference only. Data subject to change without notice.
Additional quarter-turn latch provided on top and bottom of all enclosures.

Ground-Mount Enclosures
Type 4X Multi-Door Free-Standing with 3-Point Locking
Data Sheet

Application
- Houses electrical controls and instruments
- Intended for indoor or outdoor use where a corrosive environment exists
- Protects against corrosion, circulating and windblown dust and rain, falling dirt, splashing water and hose directed water

Standards
- UL 508A, Type 4X
- CSA C22.2 No.94, Type 4X
- NEMA 250, Type 4X

Accessories
- Channel mounting hardware
- Touch-up paint
- Replacement handle, BD-PKHB, (see page 428)
- See Accessories section

Finish
- Door and sides of body have a smooth #4 brushed finish

Construction
- Enclosure and door are fabricated from code gauge stainless steel Type 304 (see table)
- All continuous welded seams are finished smooth
- Doors are secured to the body with removable concealed hinges and a center locating 3-point key-locking and padlock handle mechanism
- Additional quarter turn latches provided at the top and bottom on all enclosure doors
- Modern bevel profile on hinge side of enclosure doors
- Doors have an oil-resistant gasket
- Ground stud provided on doors and body
- Print pockets provided
- Heavy steel stiffeners welded across the back provide enclosure rigidity
- Lighting mounting channel provided
- Large lifting eyebolts are supplied
- Three styles of enclosure construction:
  1. Three-door: single and double-door section
  2. Four-door: (2) double door sections
  3. Five-door: single and (2) double-door sections
- Panels have a white enamel finish

Discount Schedule: C2
Subclass: DMM

Notes: We can provide special sizes, finishes and other modifications. Consult the factory for your special requirements.

Ground-Mount Enclosures
Type 4X Three-Door Free-Standing with 3-Point Locking
Illustration Sheet and Catalog Number

Enclosure Catalog Number	Enclosure Size Height x Width x Depth in.	mm	Body/Door Gauge	Panel A Size Height x Width in.	mm	Panel B Size Height x Width in.	mm
8611214-4XSFS	86.00 x 112.00 x 14.00	2184 x 2845 x 356	10/12	78.00 x 33.00	1981 x 838	78.00 x 70.00	1981 x 1778

Top View

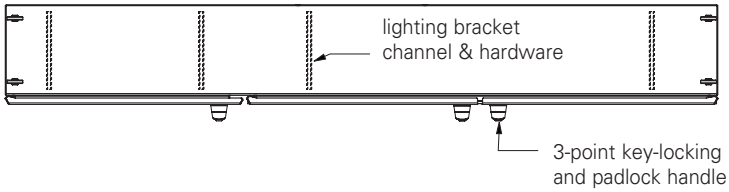

ID = Inside Dimension

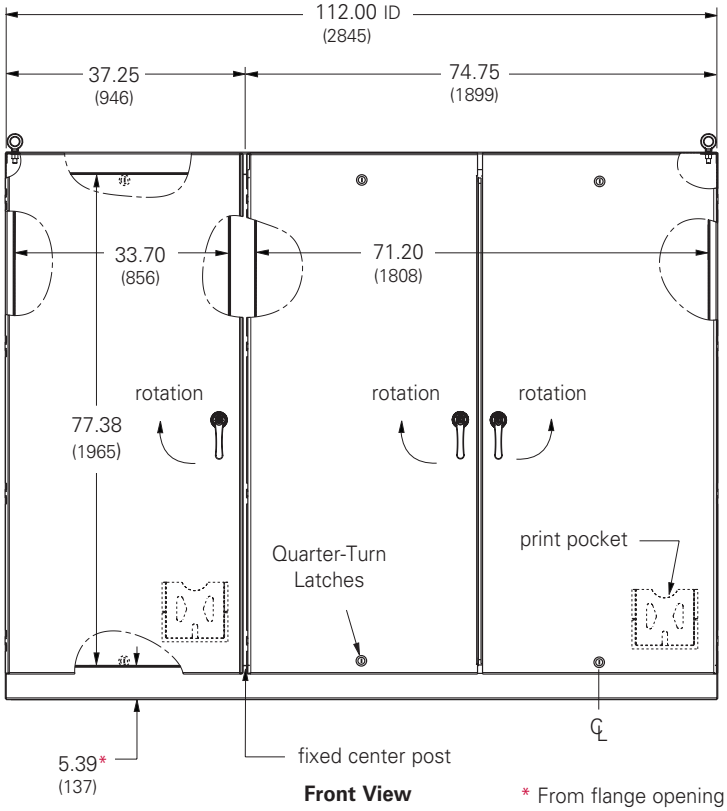

Front View

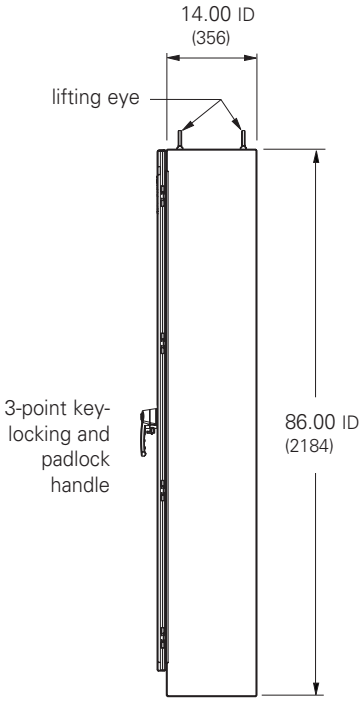

Side View

* From flange opening to bottom of enclosure

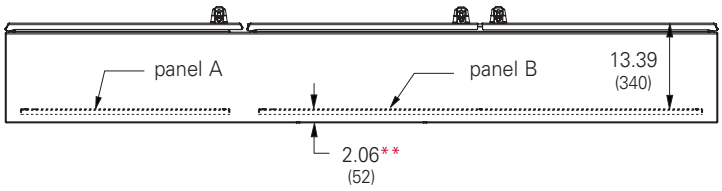

Bottom View

** From front of panel to inside of enclosure

Notes: Dimensions are in inches. Millimeters shown are for reference only. Data subject to change without notice.

Ground-Mount Enclosures
Type 4X Four-Door Free-Standing with 3-Point Locking
Illustration Sheet and Catalog Number

Enclosure Catalog Number	Enclosure Size Height x Width x Depth in.	Enclosure Size Height x Width x Depth mm	Body/Door Gauge	Panel Size Height x Width in.	Panel Size Height x Width mm
8615014-4XSFS	86.00 x 150.00 x 14.00	2184 x 3810 x 356	10/12	78.00 x 70.00	1981 x 1778

Top View

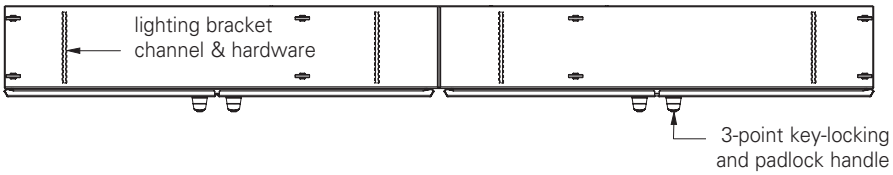

ID = Inside Dimension

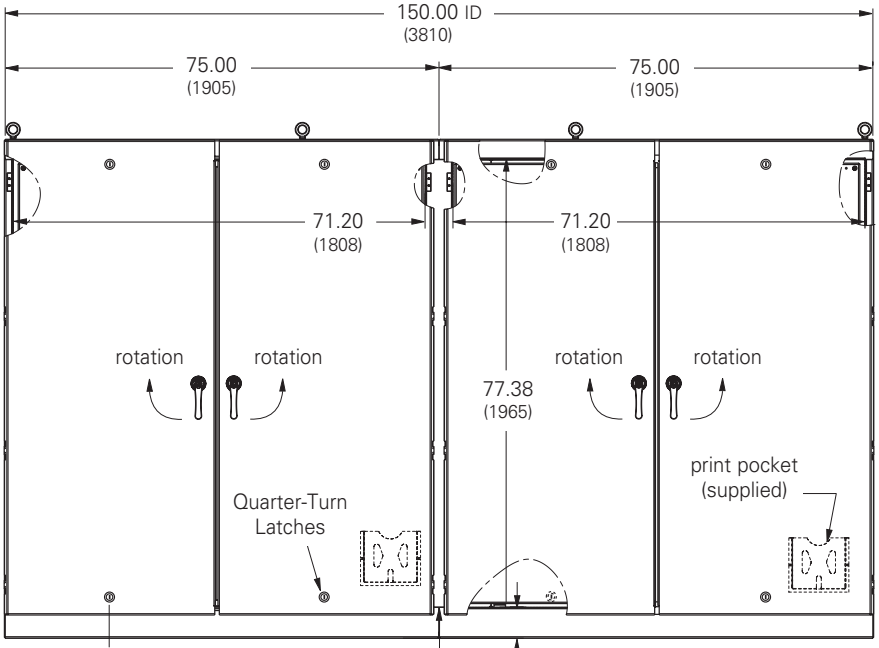

Front View

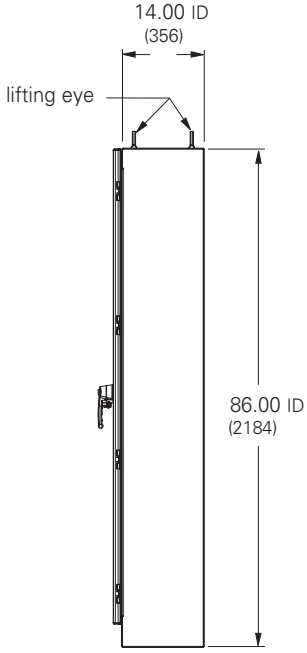

Side View

* From flange opening to bottom of enclosure

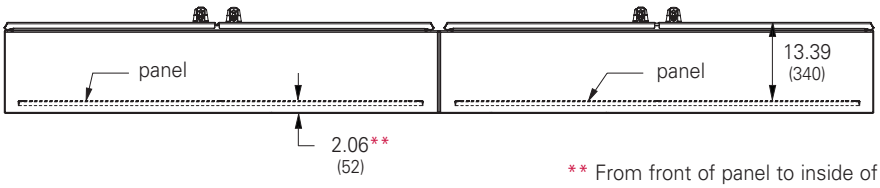

** From front of panel to inside of enclosure

Bottom View

Notes: Dimensions are in inches. Millimeters shown are for reference only. Data subject to change without notice.

Ground-Mount Enclosures
Type 4X Five-Door Free-Standing with 3-Point Locking
Illustration Sheet and Catalog Number

Enclosure Catalog Number	Enclosure Size Height x Width x Depth in.	mm	Body/Door Gauge	Panel A Size Height x Width in.	mm	Panel B Size Height x Width in.	mm
8618714-4XSFS	86.00 x 187.50 x 14.00	2184 x 4763 x 356	10/12	78.00 x 33.00	1981 x 838	78.00 x 70.00	1981 x 1778

Top View

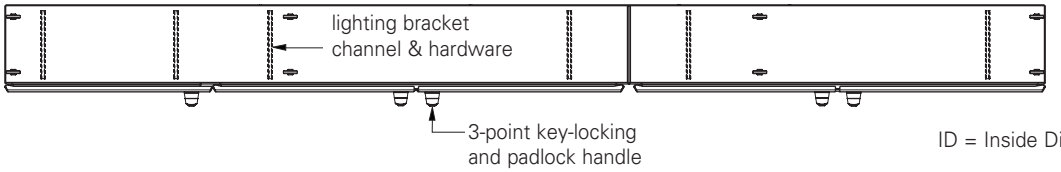

ID = Inside Dimension

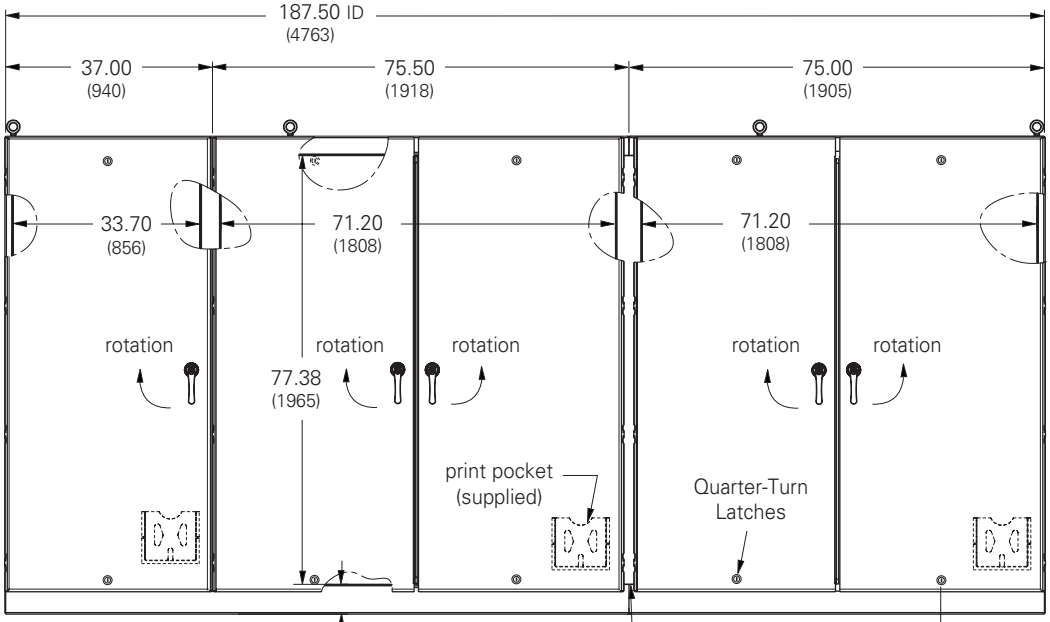

Front View

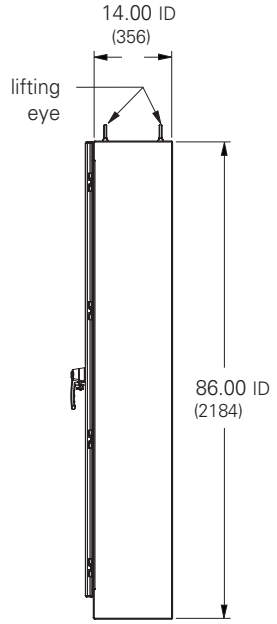

Side View

* From flange opening to bottom of enclosure

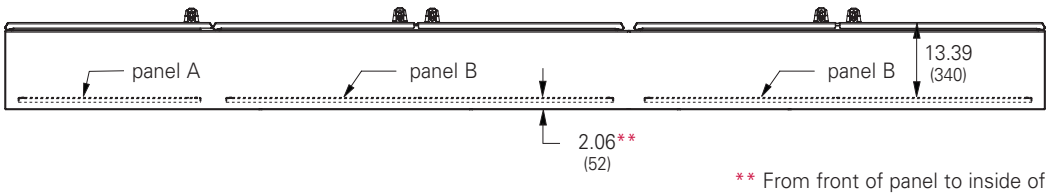

** From front of panel to inside of enclosure

Bottom View

Notes: Dimensions are in inches. Millimeters shown are for reference only. Data subject to change without notice.

Ground-Mount Enclosures
Type 4X Double-Door EnviroShield™ Free-Standing with 3-Point Locking
Data Sheet

Application

- Houses electrical controls and electrical instruments in harsh environments
- Provides quick and easy access indoors and out
- Protects against circulating dust, falling dirt, dripping non-corrosive liquids, rain, sleet, ice, splashing and hose directed water

Standards

- UL 508A listed, Type 3R, 4, 4X, 12
- CSA C22.2 No.94 certified, Type 3R, 4, 4X, 12
- Conforms to NEMA standard for Type 3, 3R, 4, 4X, 12
- E.I.A. RS-310-D
- NSF Criteria C-2

Finish

- Doors and sides of body have a smooth #4 brushed finish

Accessories

- Full and half panels
- Side panels
- Swing panels
- Touch-up paint
- Mounting legs
- Rack mounting angles
- Swing out mounting frames
- Replacement handle, BD-PKHSS, see page 429
- See Accessories section

Construction

- Enclosure and door are fabricated from (12) gauge Type 304 or Type 316L stainless steel
- All continuous welded seams are finished smooth
- Doors are secured to the body with removable concealed stainless hinges and a center locating 3-point key-locking and padlock stainless steel handle mechanism
- Modern bevel profile on both sides of enclosure doors
- Removable center post
- Doors have a fixed, neoprene IV2 closed cell gasket
- Ground stud provided on doors and body
- Print pocket provided
- Large bolt-on lifting eyes are mounted to the sides of the enclosure
- Mounting channels are welded inside for locating panels or rack mounts along enclosure depth, as well as mounting studs for fixed panels
- Swing panels, single full and single half panels can be installed in double-door enclosures when the center post is used
- A variety of optional panels and accessories are available, (see pages 242 - 253)

Discount Schedule: C2

Subclass: VS0 (Type 304)
VT0 (Type 316L)

Notes: We can provide special sizes, finishes and other modifications. Consult the factory for your special requirements.

Ground-Mount Enclosures
Type 4X Double-Door EnviroShield™ Free-Standing with 3-Point Locking
Illustration Sheet and Catalog Number

Enclosure Catalog Number		Enclosure Size Height x Width x Depth A x B x C		D		E	
Type 304 Stainless Steel	Type 316L Stainless Steel	in.	mm	in.	mm	in.	mm
ES-604812-4XS	ES-604812-4XSS6	60.00 x 48.00 x 12.00	1524 x 1219 x 305	65.87	1673	64.44	1637
ES-604816-4XS	ES-604816-4XSS6	60.00 x 48.00 x 16.00	1524 x 1219 x 406	65.87	1673	64.44	1637
ES-604820-4XS	ES-604820-4XSS6	60.00 x 48.00 x 20.00	1524 x 1219 x 508	65.87	1673	64.44	1637
ES-604824-4XS	ES-604824-4XSS6	60.00 x 48.00 x 24.00	1524 x 1219 x 609	65.87	1673	64.44	1637
ES-606012-4XS	ES-606012-4XSS6	60.00 x 60.00 x 12.00	1524 x 1524 x 305	65.87	1673	64.44	1637
ES-606016-4XS	ES-606016-4XSS6	60.00 x 60.00 x 16.00	1524 x 1524 x 406	65.87	1673	64.44	1637
ES-606020-4XS	ES-606020-4XSS6	60.00 x 60.00 x 20.00	1524 x 1524 x 508	65.87	1673	64.44	1637
ES-606024-4XS	ES-606024-4XSS6	60.00 x 60.00 x 24.00	1524 x 1524 x 609	67.87	1724	64.44	1637
ES-726012-4XS	ES-726012-4XSS6	72.00 x 60.00 x 12.00	1829 x 1524 x 305	77.87	1978	76.44	1941
ES-726016-4XS	ES-726016-4XSS6	72.00 x 60.00 x 16.00	1829 x 1524 x 406	77.87	1978	76.44	1941
ES-726020-4XS	ES-726020-4XSS6	72.00 x 60.00 x 20.00	1829 x 1524 x 508	77.87	1978	76.44	1941
ES-726024-4XS	ES-726024-4XSS6	72.00 x 60.00 x 24.00	1829 x 1524 x 609	77.87	1978	76.44	1941
ES-727212-4XS	ES-727212-4XSS6	72.00 x 72.00 x 12.00	1829 x 1829 x 305	77.87	1978	76.44	1941
ES-727216-4XS	ES-727216-4XSS6	72.00 x 72.00 x 16.00	1829 x 1829 x 406	77.87	1978	76.44	1941
ES-727220-4XS	ES-727220-4XSS6	72.00 x 72.00 x 20.00	1829 x 1829 x 508	77.87	1978	76.44	1941
ES-727224-4XS	ES-727224-4XSS6	72.00 x 72.00 x 24.00	1829 x 1829 x 609	79.87	2028	76.44	1941

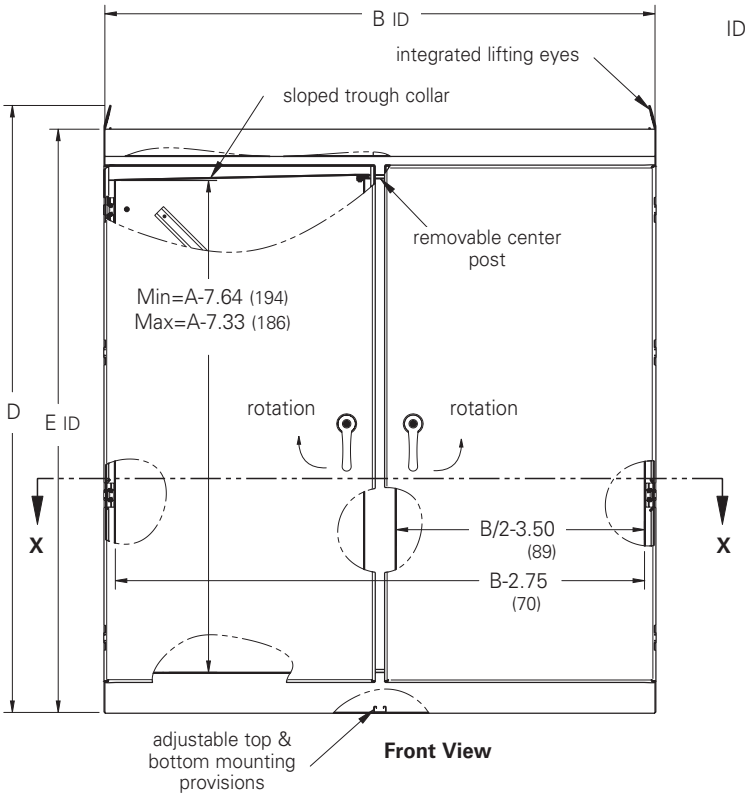

Front View

ID = Inside Dimension

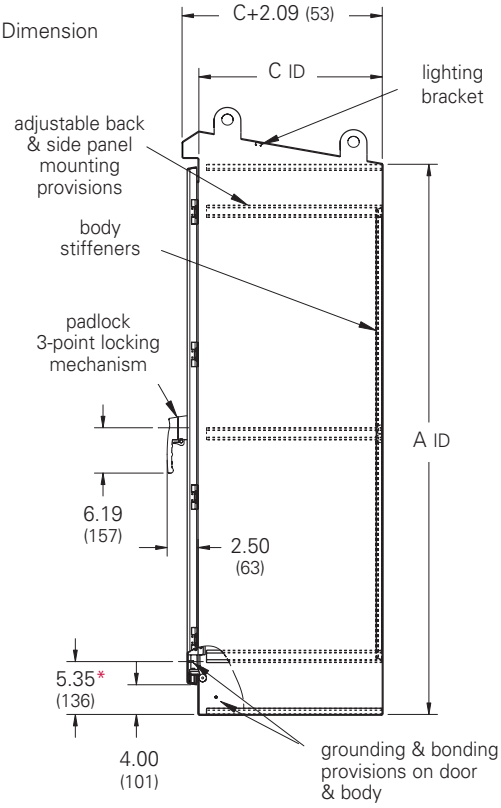

Side View

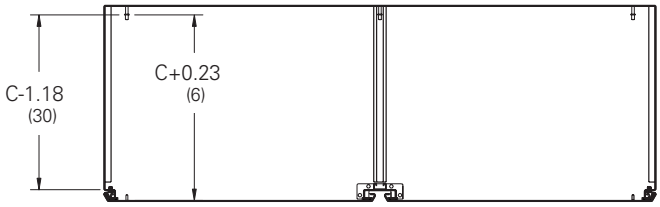

Section X-X

* From flange opening to bottom of enclosure

Notes: Dimensions are in inches. Millimeters shown are for reference only. Data subject to change without notice.

Free-Standing Enclosure Accessories
Type 4X Single-Door
Full and Half Panel
Illustration Sheet and Catalog Number

Discount Schedule: C2
Subclass: DSD

Full Swing Panel (Single-Door)

Panel Enclosure Catalog Number	Panel Size Height x Width A x B in.	mm	C in.	mm	Fits Height x Width in.	mm
AF6024P	47.87 x 19.87	1216 x 505	23.12	587	60.00 x 24.00	1524 x 610
AF6036P	47.87 x 31.87	1216 x 809	23.12	587	60.00 x 36.00	1524 x 914
AF7224P	59.87 x 19.87	1521 x 505	29.12	740	72.00 x 24.00	1829 x 610
AF7230P	59.87 x 25.87	1521 x 657	29.12	740	72.00 x 30.00	1829 x 762
AF7236P	59.87 x 31.87	1521 x 809	29.12	740	72.00 x 36.00	1829 x 914
AF9024P	77.87 x 19.87	1978 x 505	38.12	968	90.00 x 24.00	2286 x 610
AF9036P	77.87 x 31.87	1978 x 809	38.12	968	90.00 x 36.00	2286 x 914

Half Swing Panel (Single-Door)

Panel Enclosure Catalog Number	Panel Size Height x Width A x B in.	mm	C in.	mm	Fits Height x Width in.	mm
AF6024HP	24.75 x 19.87	629 x 505	23.12	587	60.00 x 24.00	1524 x 610
AF6036HP	24.75 x 31.87	629 x 809	23.12	587	60.00 x 36.00	1524 x 914
AF7224HP	30.75 x 19.87	781 x 505	29.12	587	72.00 x 24.00	1829 x 610
AF7230HP	30.75 x 25.87	781 x 657	29.12	587	72.00 x 30.00	1829 x 762
AF7236HP	30.75 x 31.87	781 x 809	29.12	587	72.00 x 36.00	1829 x 914
AF9024HP	39.75 x 19.87	1010 x 505	38.12	968	90.00 x 24.00	2286 x 610
AF9036HP	39.75 x 31.87	1010 x 809	38.12	968	90.00 x 36.00	2286 x 914

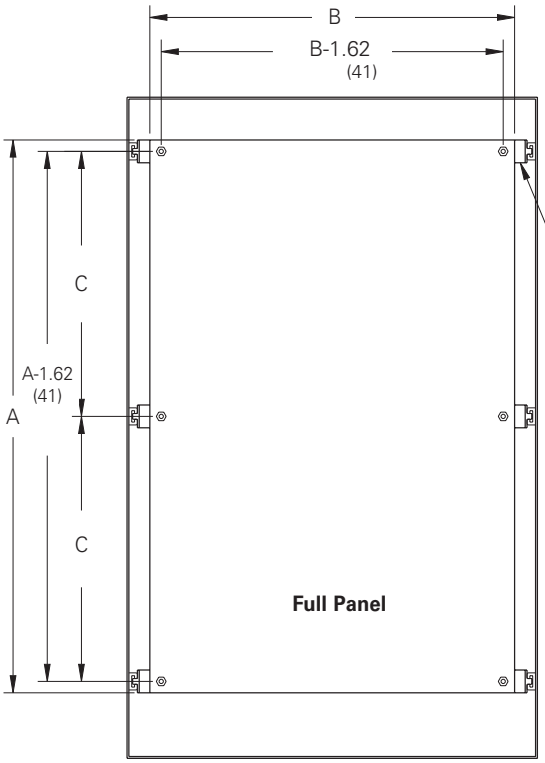

Full Panel Mounting

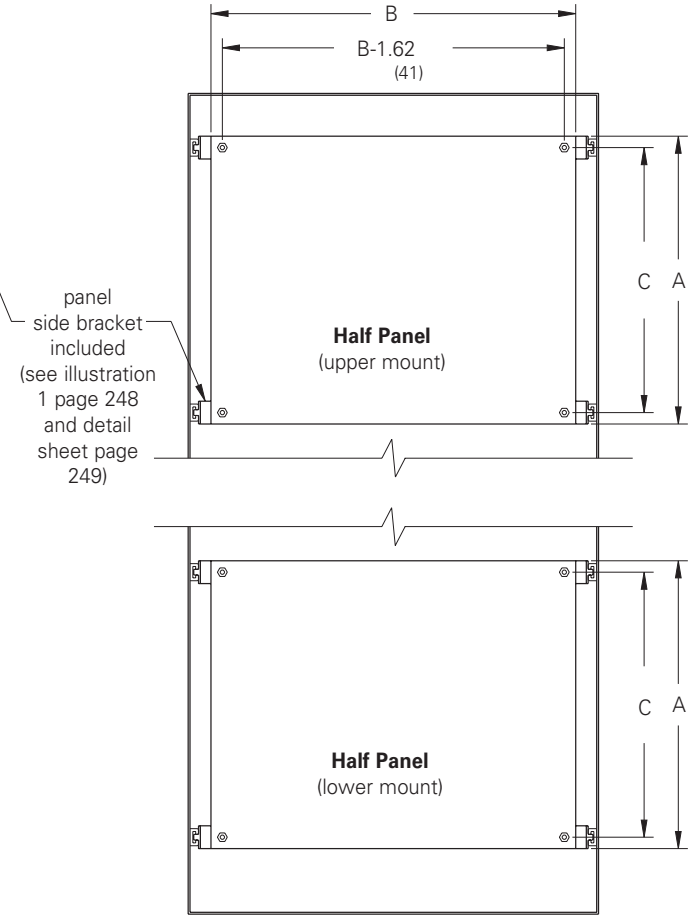

Half Panel Mounting

Note: Full and Half panel for single-door, single and dual-access enclosures are (12) gauge steel and furnished with panel side brackets and all hardware necessary for channel and panel mounting. Half Panels can be mounted in either the upper or lower portion of the enclosure. Free standing design permits the panel to adjust along the depth of the enclosure. With dual-access enclosures, Full and Half panels can be mounted back-to-back.

Notes: Dimensions are in inches. Millimeters shown are for reference only. Data subject to change without notice.

Free-Standing Enclosure Accessories
Type 4X Double-Door
Full Panel
Illustration Sheet and Catalog Number

Discount Schedule: C2
Subclass: DSD

Panel Catalog Number	Panel Size Height x Width A x B in.	Panel Size Height x Width A x B mm	C in.	C mm	D in.	D mm	Fits Enclosure Height x Width in.	Fits Enclosure Height x Width mm
AF6048P	47.87 x 43.87	1216 x 1114	23.12	587	21.12	530	60.00 x 48.00	1524 x 1219
AF6060P	47.87 x 55.87	1216 x 1419	23.12	587	27.12	689	60.00 x 60.00	1524 x 1524
AF7248P	59.87 x 43.87	1521 x 1114	29.12	740	21.12	530	72.00 x 48.00	1829 x 1219
AF7260P	59.87 x 55.87	1521 x 1419	29.12	740	27.12	689	72.00 x 60.00	1829 x 1524
AF7272P	59.87 x 67.87	1521 x 1724	29.12	740	33.12	841	72.00 x 72.00	1829 x 1829
AF9048P	77.87 x 43.87	1978 x 1114	38.12	968	21.12	530	90.00 x 48.00	2286 x 1219
AF9072P	77.87 x 67.87	1978 x 1724	38.12	968	33.12	841	90.00 x 72.00	2286 x 1829

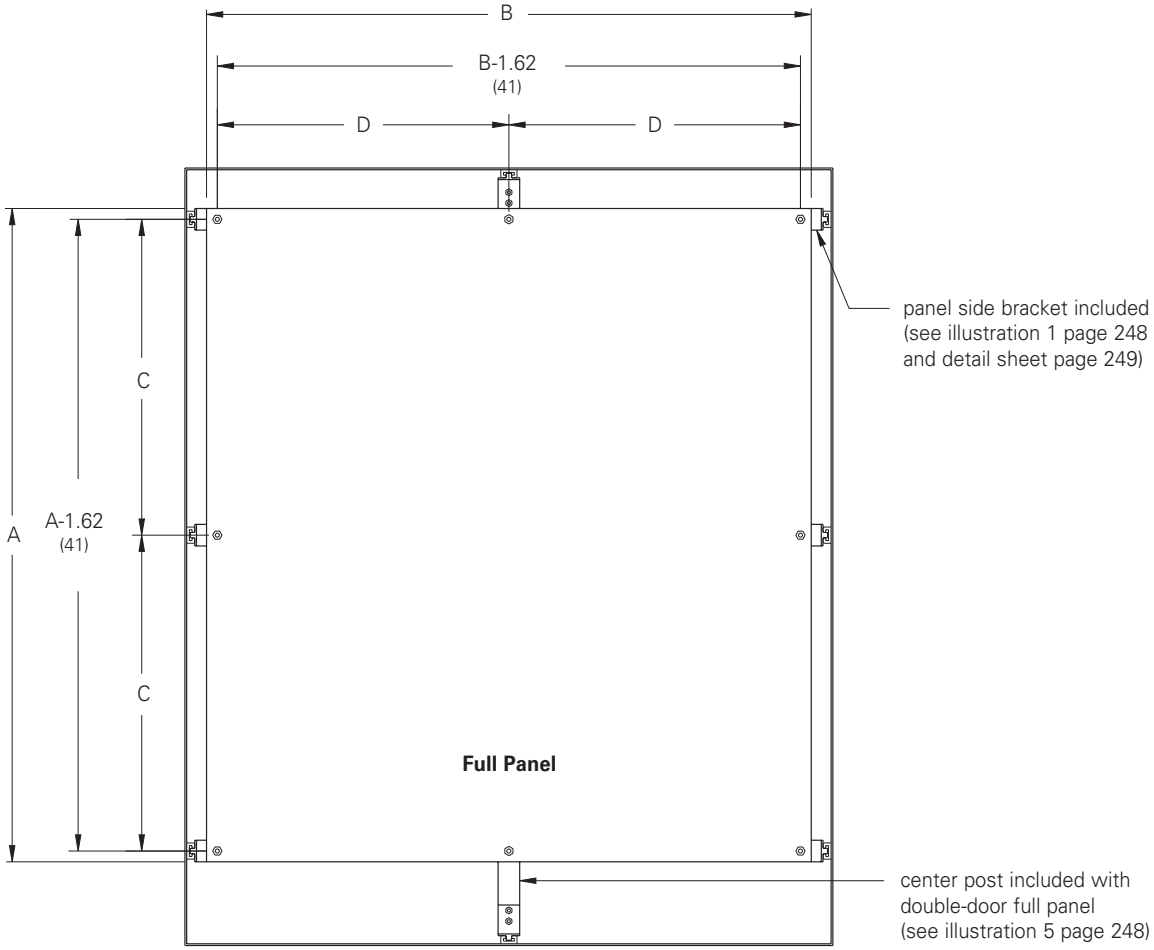

Full Panel Mounting

Notes: Full Panel for double-door, single and dual-access enclosures are (10) gauge steel and furnished with Panel Brackets, Center Post assembly, panel handle kit and all hardware necessary for channel and panel mounting. The Center Post assembly offers additional support of panel and equipment. Free-standing design permits the panel to adjust along the depth of the enclosure. With dual-access enclosures, Full and Half Panels can be mounted back-to-back.

Notes: Dimensions are in inches. Millimeters shown are for reference only. Data subject to change without notice.

Free-Standing Enclosure Accessories
Type 4X Double-Door
Half Panel
Illustration Sheet and Catalog Number

Discount Schedule: C2
Subclass: DSD

Panel Catalog Number	Panel Size Height x Width A x B in.	mm	C in.	mm	D in.	mm	Fits Enclosure Height x Width in.	mm
AF6048HP	24.75 x 43.87	629 x 1114	23.12	587	21.12	536	60.00 x 48.00	1524 x 1219
AF7248HP	30.75 x 43.87	781 x 1114	29.12	740	21.12	536	72.00 x 48.00	1829 x 1219
AF7260HP	30.75 x 55.87	781 x 1419	29.12	740	7.12	181	72.00 x 60.00	1829 x 1524
AF7272HP	30.75 x 67.87	781 x 1724	29.12	740	33.12	841	72.00 x 72.00	1829 x 1829
AF9048HP	39.75 x 43.87	1010 x 1114	38.12	968	21.12	536	90.00 x 48.00	2286 x 1219
AF9072HP	39.85 x 67.87	1012 x 1724	38.12	968	33.12	841	90.00 x 72.00	2286 x 1829

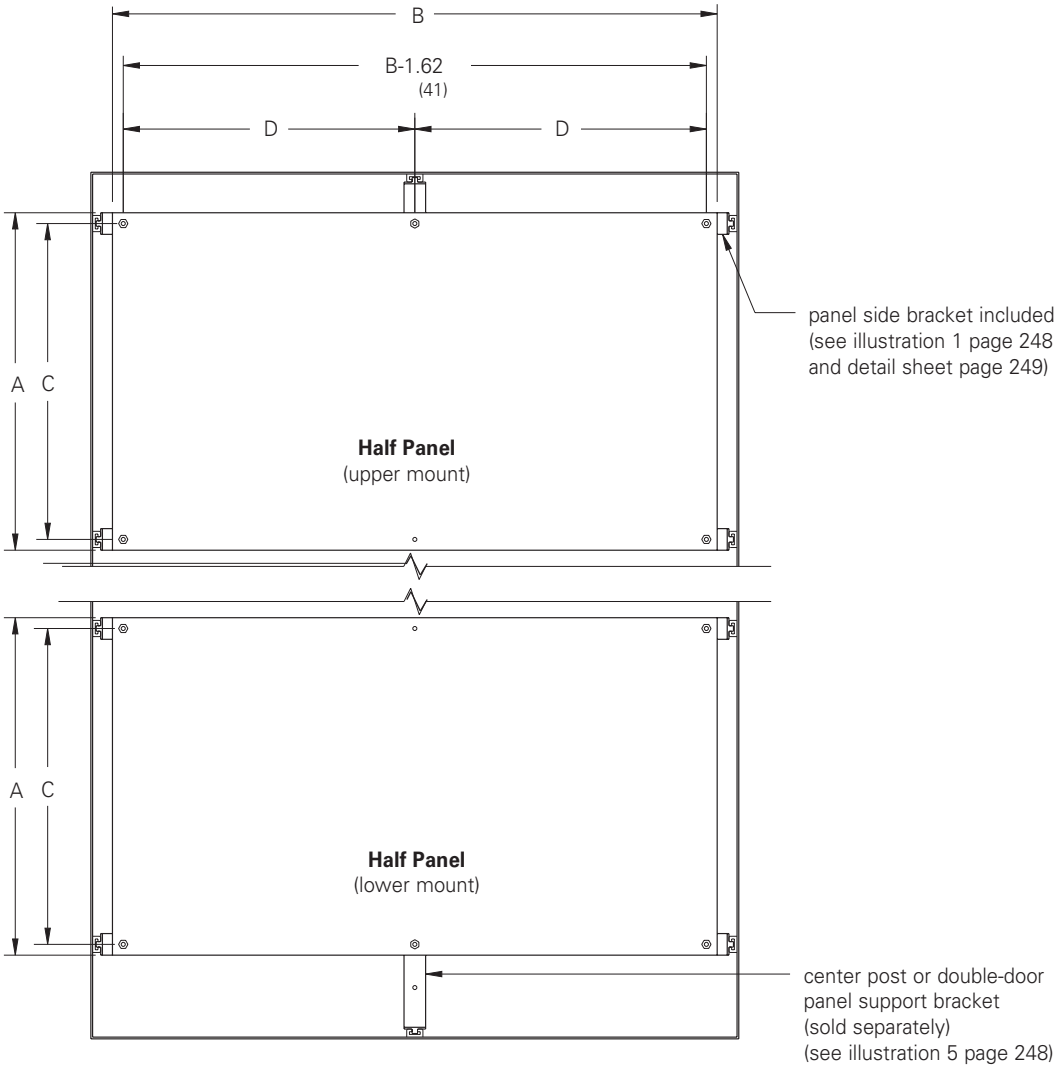

Half Panel Mounting

Note: Half panel for double-door, single and dual-access enclosures are (12) gauge steel and furnished with Panel Brackets and all hardware necessary for channel and panel mounting. **A Center Post assembly or a double-door panel support bracket (catalog number AFSUP2) for additional support of the panel is optional and sold separately.** Free-standing design permits the panel to adjust along the depth of the enclosure. With dual-access enclosures, Full and Half Panels can be mounted back-to-back.

Notes: Dimensions are in inches. Millimeters shown are for reference only. Data subject to change without notice.

Free-Standing Enclosure Accessories Type 4X

Side Panel And Center Post

Illustration Sheet and Catalog Number

Discount Schedule: C2

Side Panel - Subclass: DSD

Panel Catalog Number	Panel Size Height x Width A x B in.	mm	C in.	mm	Fits Enclosure Height in.	mm	Depth* in.	mm
AF6018SP	48.37 x 13.87	1229 x 340	23.12	587	60.00	1524	18.00	457
AF7218SP	60.37 x 13.87	1533 x 340	29.12	740	72.00	1829	18.00	457
AF7224SP	60.37 x 19.87	1533 x 505	29.12	740	72.00	1829	24.00	610
AF9018SP	78.37 x 13.87	1991 x 340	38.12	968	90.00	2286	18.00	457
AF9024SP	78.37 x 19.87	1991 x 505	38.12	968	90.00	2286	24.00	457

* Back panels restrict the movement of side panels and will prohibit mounting in some depths. See detail sheet for back panel spacing.

Center Post - Subclass: DS0

Center Post Catalog Number	A in.	mm	B in.	mm	Fits Enclosure Height in.	mm
AF60CPS	58.37	1483	23.12	587	60.00	1524
AF72CPS	70.37	1787	29.12	740	72.00	1829
AF90CPS	88.37	2245	38.12	968	90.00	2286

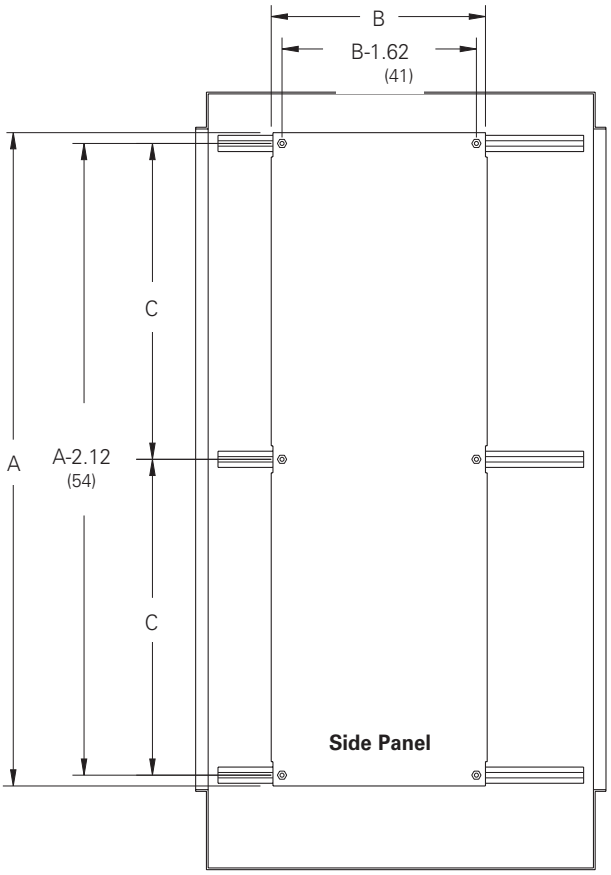

Side Panel Mounting

Side Panels are (12) gauge steel and furnished with hardware necessary for channel mounting. They will fit any width enclosure and are adjustable along its depth, however, when Full or Half Panels are installed, movement will be restricted and with some depths make side mounting prohibitive.

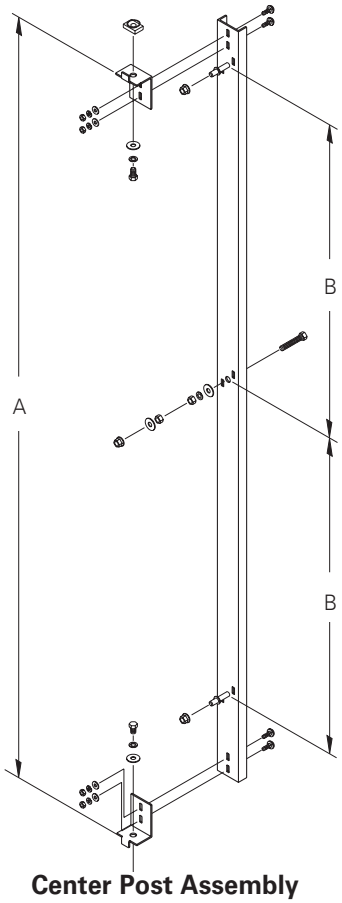

Center Post Assembly

Center Post assembly is furnished with all double-door Full Panels and includes hardware necessary for channel and panel mounting. The Center Post is optional on double-door Half Panels and Swing Panel mounting and must be ordered separately. It attaches to the top and bottom channels making it adjustable along the depth of the enclosure. See illustration #5 on the Detail Sheet-page 248.

Notes: Dimensions are in inches. Millimeters shown are for reference only. Data subject to change without notice.

Free-Standing Enclosure Accessories
Type 4X Single-Door
Full and Half Swing Panel
Illustration Sheet and Catalog Number

Discount Schedule: C2
Subclass: DSD

Full Swing Panel (Single-Door)

Panel Catalog Number	Panel Size Height x Width A x B in.	mm	C in.	mm	Fits Enclosure Height x Width in.	mm
AF6024SWP	47.87 x 18.75	1216 x 476	23.12	587	60.00 x 24.00	1524 x 610
AF6036SWP	47.87 x 30.75	1216 x 781	23.12	587	60.00 x 36.00	1524 x 914
AF7224SWP	59.87 x 18.75	1521 x 476	29.12	740	72.00 x 24.00	1829 x 610
AF7230SWP	59.87 x 24.75	1521 x 629	29.12	740	72.00 x 30.00	1829 x 762
AF7236SWP	59.87 x 30.75	1521 x 781	29.12	740	72.00 x 36.00	1829 x 914
AF9024SWP	77.87 x 18.75	1978 x 476	38.12	968	90.00 x 24.00	2286 x 610
AF9036SWP	77.87 x 30.75	1978 x 781	38.12	968	90.00 x 36.00	2286 x 914

Half Swing Panel (Single-Door)

Panel Catalog Number	Panel Size Height x Width A x B in.	mm	C in.	mm	Fits Enclosure Height x Width in.	mm
AF6024HSWP	24.75 x 18.75	629 x 476	23.12	587	60.00 x 24.00	1524 x 610
AF6036HSWP	24.75 x 30.75	629 x 781	23.12	587	60.00 x 36.00	1524 x 914
AF7224HSWP	30.75 x 18.75	781 x 476	29.12	740	72.00 x 24.00	1829 x 610
AF7230HSWP	30.75 x 24.75	781 x 629	29.12	740	72.00 x 30.00	1829 x 762
AF7236HSWP	30.75 x 30.75	781 x 781	29.12	740	72.00 x 36.00	1829 x 914
AF9024HSWP	39.75 x 18.75	1010 x 476	38.12	968	90.00 x 24.00	2286 x 610
AF9036HSWP	39.75 x 30.75	1010 x 781	38.12	968	90.00 x 36.00	2286 x 914

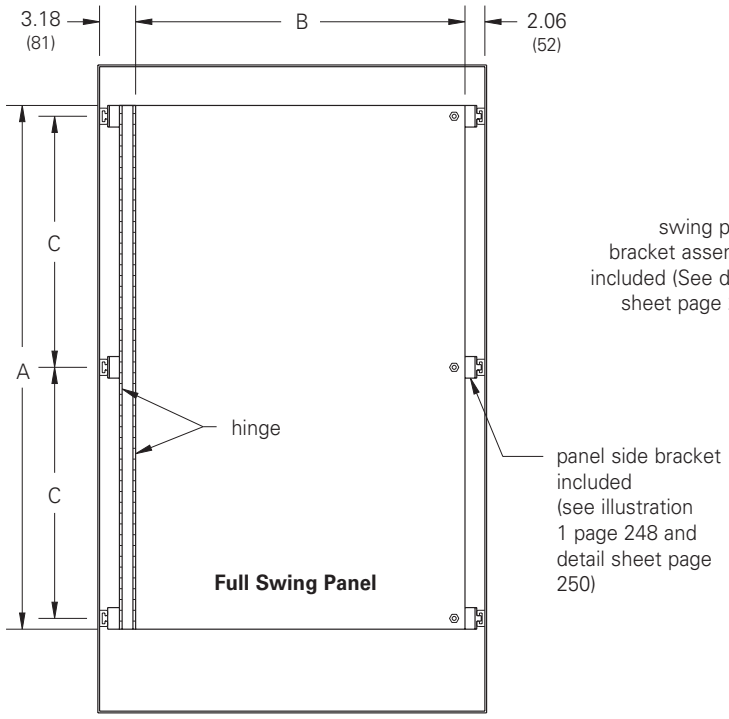

Full Swing Panel Mounting

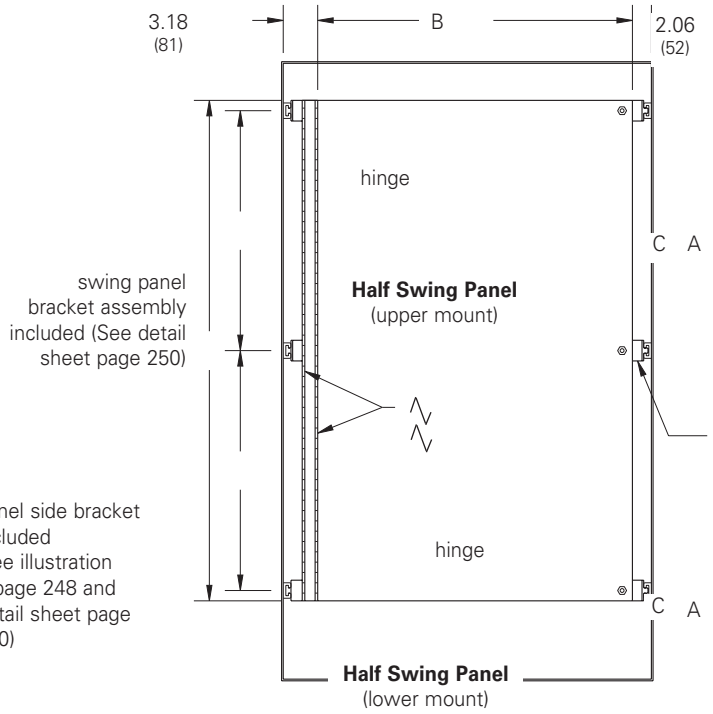

Half Swing Panel Mounting

Note: Full Swing Panel and Half Swing Panel for single-door, single and dual-access enclosures are (12) gauge steel, have a dual hinge swing panel bracket and furnished with Panel Brackets and all hardware necessary for channel and panel mounting. Panels can be installed so they hinge on either the left or right side. In addition, Half Panels can be mounted in either the upper or lower portion of the enclosure. Free-standing design permits the panel to be adjustable along the depth of the enclosure. The dual hinge will allow the inner panel to swing completely out of the door opening when within 5.50 inches of the front. With dual-access enclosures, Full and Half Swing Panels can be mounted back-to-back.

Notes: Dimensions are in inches. Millimeters shown are for reference only. Data subject to change without notice.

Free-Standing Enclosure Accessories
Type 4X Double-Door
Full and Half Swing Panel
Illustration Sheet and Catalog Number

Discount Schedule: C2
Subclass: DSD

Full Swing Panel (Single-Door)

Panel Catalog Number	Panel Size Height x Width A x B in.	mm	C in.	mm	Fits Enclosure Height x Width in.	mm
AF6024SWP	47.87 x 18.75	1216 x 476	23.12	587	60.00 x 48.00	1524 x 1219
AF7224SWP	59.87 x 18.75	1521 x 476	29.12	740	72.00 x 48.00	1829 x 1219
AF7230SWP	59.87 x 24.75	1521 x 629	29.12	740	72.00 x 60.00	1829 x 1524
AF7236SWP	59.87 x 30.75	1521 x 781	29.12	740	72.00 x 72.00	1829 x 1829
AF9024SWP	77.87 x 18.75	1978 x 781	38.12	968	90.00 x 48.00	2286 x 1219
AF9036SWP	77.87 x 30.75	1978 x 781	38.12	968	90.00 x 72.00	2286 x 1829

Half Swing Panel (Single-Door)

Panel Catalog Number	Panel Size Height x Width A x B in.	mm	C in.	mm	Fits Enclosure Height x Width in.	mm
AF6024HSWP	24.75 x 18.75	629 x 476	23.12	587	60.00 x 48.00	1524 x 1219
AF7224HSWP	30.75 x 18.75	781 x 476	29.12	740	72.00 x 48.00	1829 x 1219
AF7230HSWP	30.75 x 24.75	781 x 629	29.12	740	72.00 x 60.00	1829 x 1524
AF7236HSWP	30.75 x 30.75	781 x 781	29.12	740	72.00 x 72.00	1829 x 1829
AF9024HSWP	39.75 x 18.75	1010 x 476	38.12	968	90.00 x 48.00	2286 x 1219
AF9036HSWP	39.75 x 30.75	1010 x 781	38.12	968	90.00 x 72.00	2286 x 1829

A Center Post assembly and Center Bracket must be ordered separately.

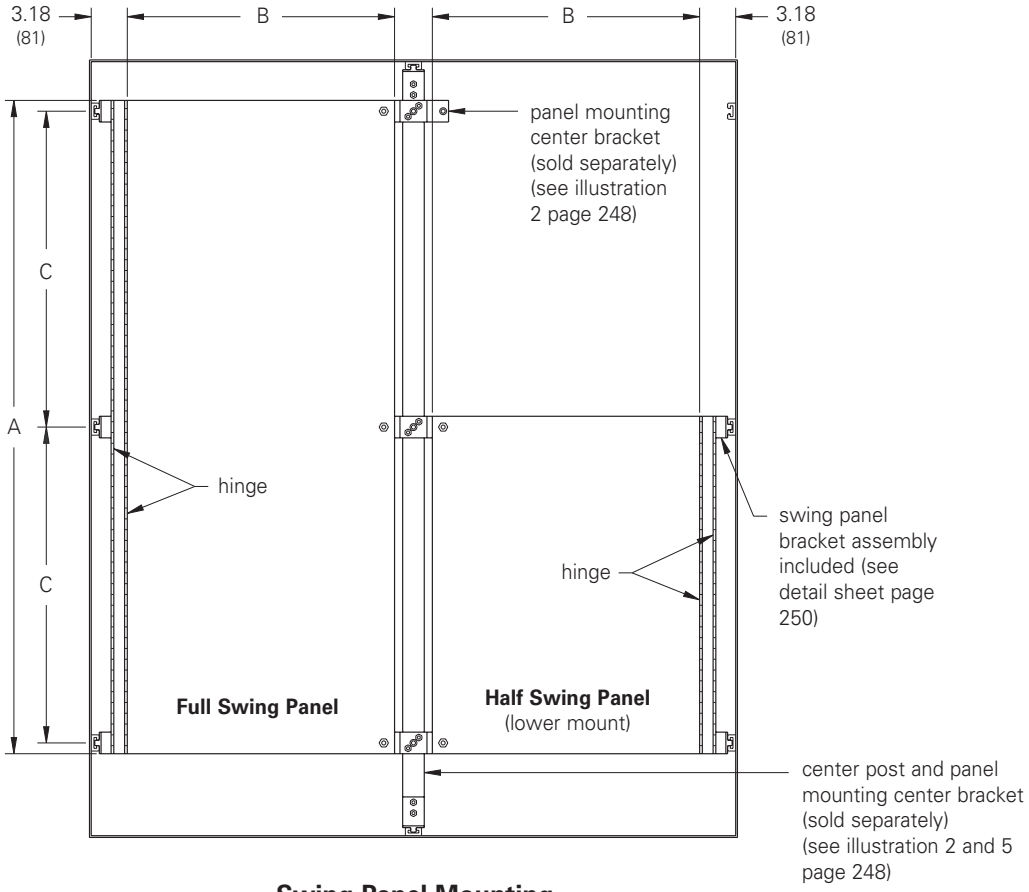

Swing Panel Mounting

Note: Full Swing Panel and Half Swing Panel for double-door, single and dual-access enclosures are (12) gauge steel, have a dual hinge swing panel bracket, and furnished with hardware necessary for side channel mounting. **A Center Post assembly and Center Bracket must be ordered separately.** Panels can be installed so they hinge either on the left or right side. In addition, Half Panels can be mounted in either the upper or lower portion of the enclosure. Free-standing design permits the panel to adjust along the depth of the enclosure. The dual hinge will allow the inner panel to swing completely out of the door opening when within 5.50 inches of the front. With dual-access enclosures, Full and Half Swing Panels can be mounted back-to-back.

Notes: Dimensions are in inches. Millimeters shown are for reference only. Data subject to change without notice.

Free-Standing Enclosure Accessories
Type 4X
Miscellaneous Accessories
Illustration Sheet and Catalog Number

Discount Schedule: C2
Subclass: DS0

Miscellaneous Accessories

Catalog Number	Description	Illustration	Quantity
AFSBRKT1	Panel mounting side bracket	1	1
AFCBRKT3	Panel mounting center bracket	2	3
AFCMH3	Channel mounting hardware	3	3
AFPSUP2	Double-door panel support bracket	4	2

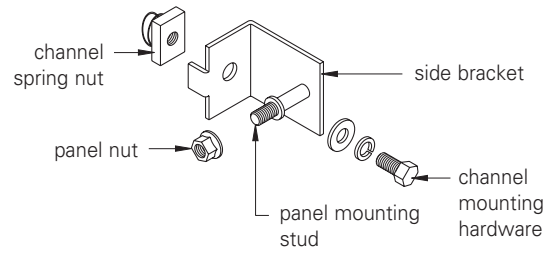

Illustration 1

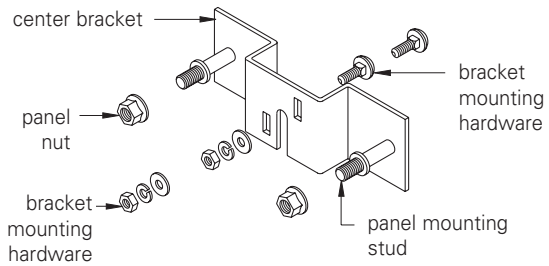

Illustration 2

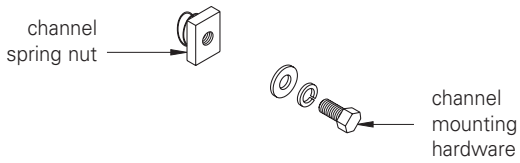

Illustration 3

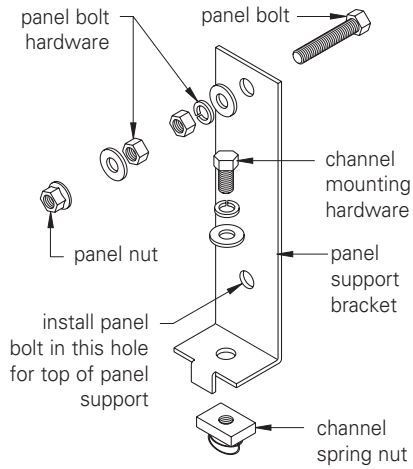

Illustration 4

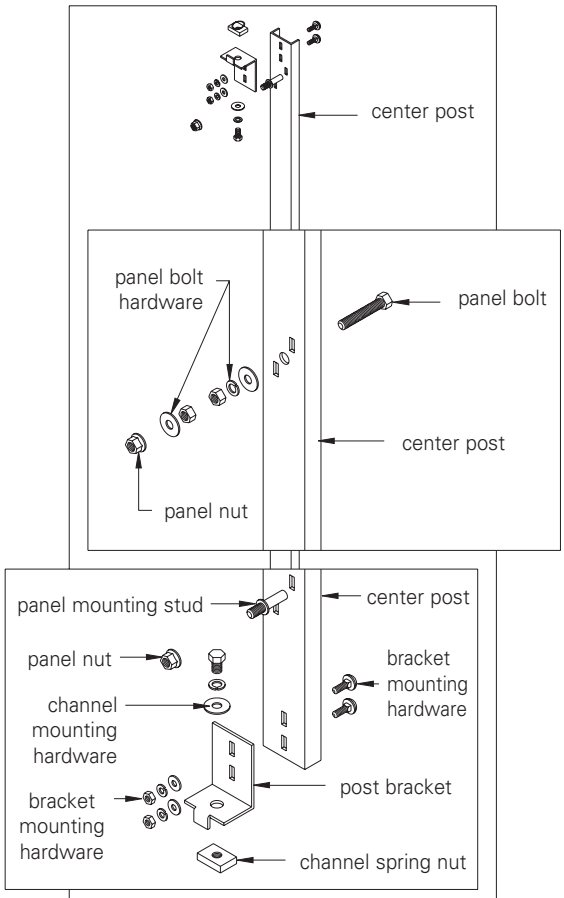

Illustration 5
See catalog number page 245

Notes: Dimensions are in inches. Millimeters shown are for reference only. Data subject to change without notice.

Free-Standing Enclosure Details
Type 4X
Panel and Enclosure
Detail Sheet

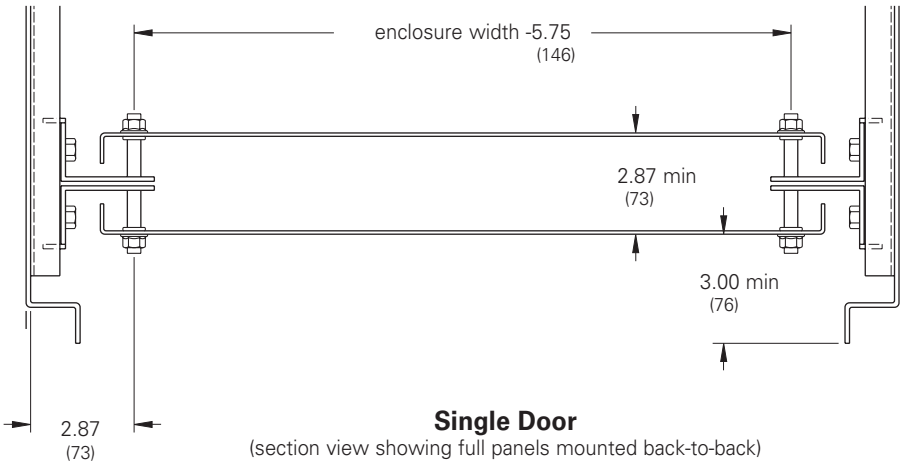

Single Door
(section view showing full panels mounted back-to-back)

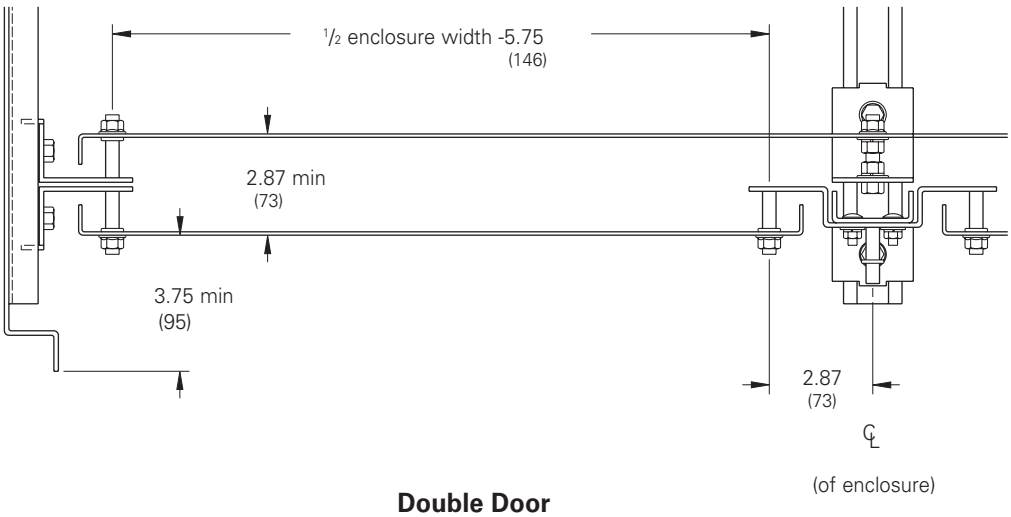

Double Door
(section view showing full panels mounted back-to-back)

Notes: Dimensions are in inches. Millimeters shown are for reference only. Data subject to change without notice.

Free-Standing Enclosure Details
Type 4X
Swing Panel and Enclosure
Detail Sheet

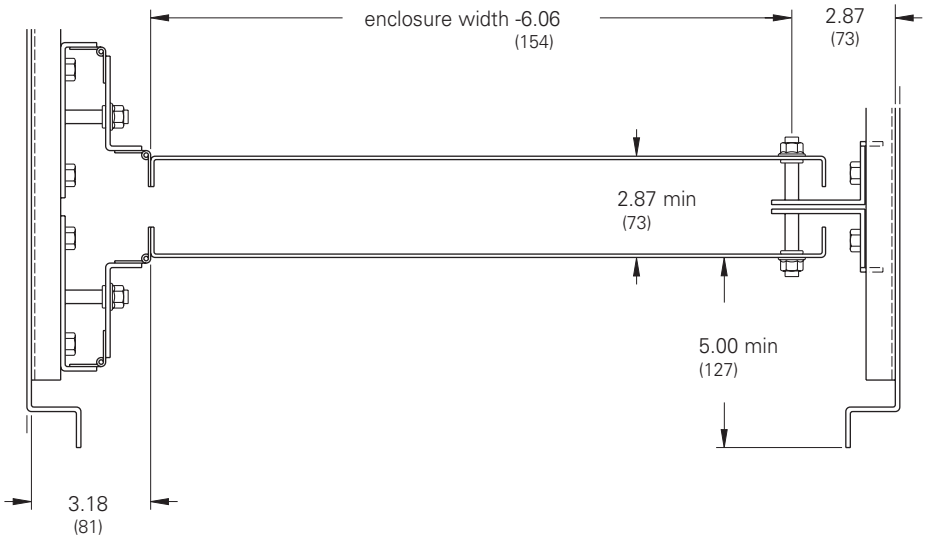

Single Door
(section view showing swing panels mounted back-to-back)

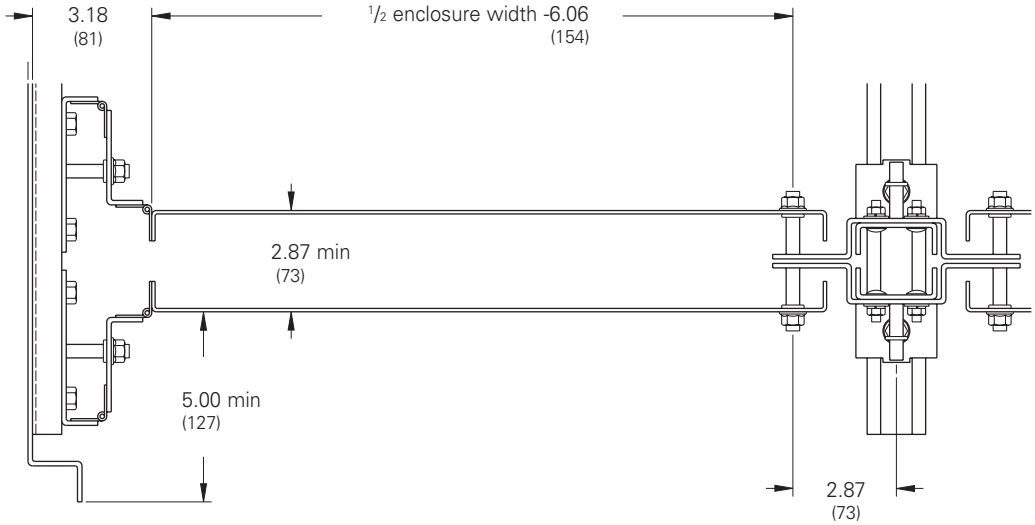

Double Door
(section view showing swing panels mounted back-to-back)

℄
(of enclosure)

Notes: Dimensions are in inches. Millimeters shown are for reference only. Data subject to change without notice.

Free-Standing Enclosures Accessories
Rack Mounting Angles
Illustration Sheet and Catalog Number

Discount Schedule: C2
Subclass: DS0

Heavy Duty Rack Mounting Angles are designed for mounting 19" (482mm) equipment in free-standing enclosures. **A Center Post Assembly, "AFxxCPS" on page 245, and a Panel Mounting Center Bracket, "AFCBRKT3" on page 248, (each sold separately) are required when mounting in any double door enclosure.** Mounting holes are spaced at the 19" "EIA" Standard and are provided to accept #10-32, #12-24, or M6 cage nuts (sold in packages of 100), on page 252.

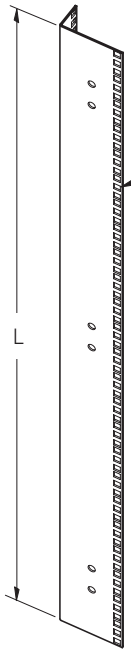

equipment mounting holes to accept #10-32, #12-24, or M6 cage nuts (sold separately)

Note: L-shaped angles are universal and can be rotated to accommodate 19" or 23" EIA mounting equipment.

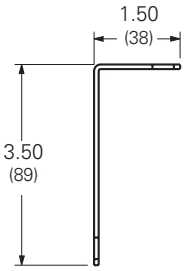

Angle Profile

'L' Shaped Mounting Angles

Catalog Number	Fits Enclosure Height in.	Fits Enclosure Height mm	L in.	L mm	Mounting U's
ES-48RMA-L	48	1219	42.00	1067	24
ES-60RMA-L	60	1524	54.25	1378	31
ES-72RMA-L	72	1829	66.50	1689	38
ES-90RMA-L	90	2286	78.75	2000	45

Kit contains two (2) full length 'L' angles, installation instructions, and hardware necessary to mount in single-door enclosures. Yellow Zinc finish.

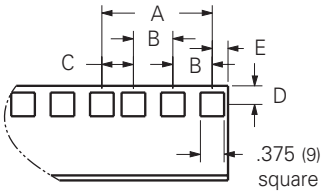

Hole Pattern

A = 1.75 (44)
B = .625 (16)
C = .500 (13)
D = .295 (7)
E = .250 (6)

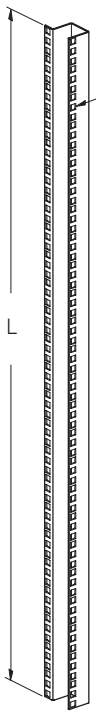

equipment mounting holes to accept #10-32, #12-24, or M6 cage nuts (sold separately)

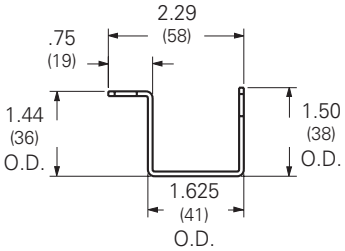

'U' Shaped Mounting Angles

Catalog Number	Fits Enclosure Height in.	Fits Enclosure Height mm	L in.	L mm	Mounting U's
ES-48RMA-U	48	1219	42.00	1067	24
ES-60RMA-U	60	1524	54.25	1378	31
ES-72RMA-U	72	1829	66.50	1689	38
ES-90RMA-U	90	2286	78.75	2000	45

Kit contains two (2) full length 'U' angles, installation instructions, and hardware necessary to mount in single-door enclosures. Yellow Zinc finish.

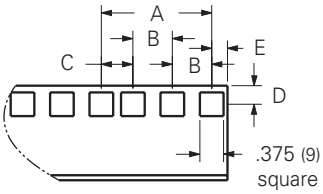

Hole Pattern

A = 1.75 (44)
B = .625 (16)
C = .500 (13)
D = .295 (7)
E = .250 (6)

Notes: Dimensions are in inches. Millimeters shown are for reference only. Data subject to change without notice.

Free-Standing Enclosures Accessories
Frames & Fasteners
Illustration Sheet and Catalog Number

Discount Schedule: C2
Subclass: DS0

Swing-Out Rack Mounted Frame

Catalog Number	Fits Enclosure Height in.	Fits Enclosure Height mm	L in.	L mm
ES-48SORMF	48	1219	36.91	937
ES-60SORMF	60	1524	49.16	1248
ES-72SORMF	72	1829	59.66	1515
ES-90SORMF	90	2286	77.18	1960

Heavy Duty Swing-Out Rack Mounting Frames are designed for mounting 19" (482mm) equipment in free standing enclosures. **A Center Post Assembly, "AFxxCPS" on page 245, and a Panel Mounting Center Bracket, "AFCBRKT3" on page 248, (each sold separately) are required when mounting in any double door enclosure.** Mounting holes are spaced per the "EIA" Standard and are provided to accept #10-32, #12-24, or M6 cage nuts (sold in packages of 100). Swing-Out Rack Mounting frames have white powder coated finish.

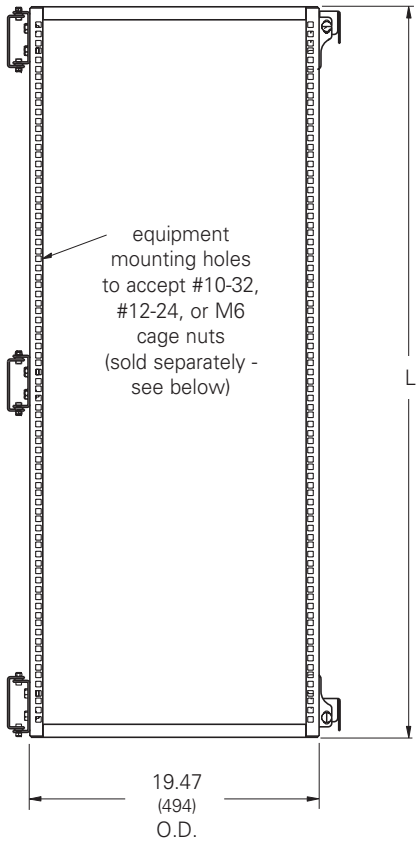

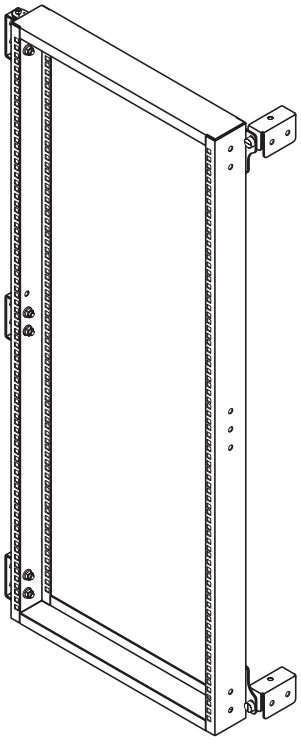

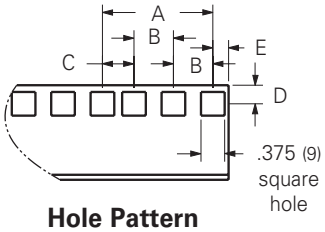

Hole Pattern

A = 1.75 (44)
B = .625 (16)
C = .500 (13)
D = .295 (7)
E = .250 (6)

Screws & Cage Nuts

Catalog Number	Description	Finish
Screws		
E2MA1032PHMS100	#10-32 Phillips	Clear Zinc
E2MA1224PHMS100	#12-24 Phillips	Clear Zinc
E2MAM6PHMS100	M6 Phillips	Yellow Zinc
Cage Nuts		
E2MACN1032100	#10-32 Threads	Clear Zinc
E2MACN1224100	#12-24 Threads	Clear Zinc
E2MACNM6100	M6 Threads	Yellow Zinc

Sold in bags of (100)

Screws

Cage Nuts

Notes: We can provide special sizes, finishes and other modifications. Consult the factory for your special requirements.
Dimensions are in inches. Millimeters shown are for reference only. Data subject to change without notice.

Free-Standing Enclosures Accessories
Floor Stand & Enclosure Stabilizer Kits
Illustration Sheet and Catalog Number

Discount Schedule: C2
Subclass: DS0

Floor Stand Kits

Catalog Number Stainless	A in.	A mm	B in.	B mm	C in.	C mm
MFK12XS	12.0	305	10.06	256	—	—
MFK16XS	16.0	406	14.06	357	—	—
MFK18XS	18.0	457	16.06	408	7.00	178
MFK20XS	20.0	508	18.06	459	8.00	203
MFK24XS	24.0	610	22.06	560	10.00	254

Floor Stand Kits are intended for use with Enviro Shield Type 4X, Type 4 and Type 12 Enclosures where floor support is required. Each kit consists of two (10) gauge legs and hardware for mounting. At the base of each leg is a prepunched plate (see drawing). Steel kits have a gray polyester powder paint finish. Stainless steel kits are fabricated from 304 stainless steel. Standard Floor Stand Kits are 12 inches (305 mm) high. For special heights, special material or non-standard construction consult the factory.

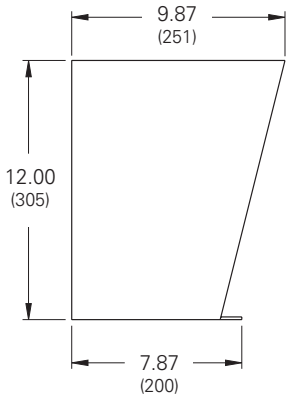

Floor Stand Kit

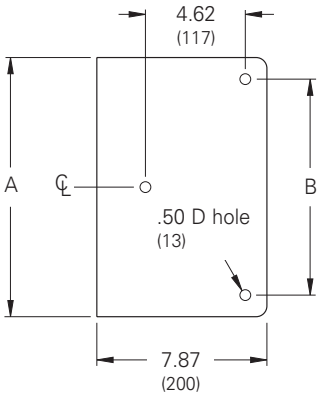

Base 12 - 16 Deep

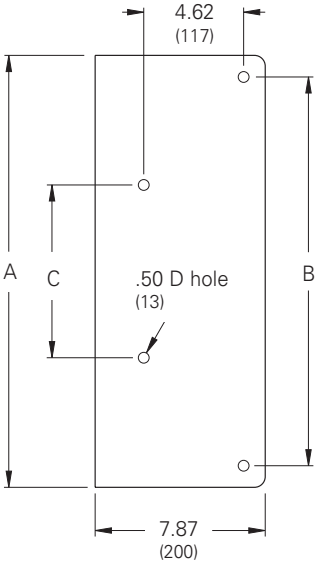

Base 18 - 24 Deep

Sanitary Leg Kit

Catalog Number	Description
ES-SMFK6	Set of four (4) legs

Kit allows space between enclosure and floor for compliance in NSF environments 1¾" (44mm) adjustment provides flexibility in all applications. Four (4) legs per kit, maintains UL/cUL Type 4X rating when properly installed.

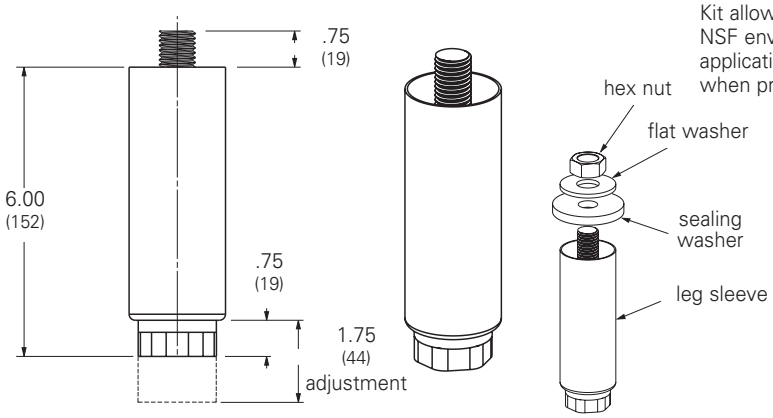

Notes: Dimensions are in inches. Millimeters shown are for reference only. Data subject to change without notice.

Polycarbonate Enclosures Type 4X Hinged and Lift-Off Screw Cover 255a-255b
JIC Fiberglass Enclosures Type 4X Lift-Off Screw Cover 256-257
JIC Fiberglass Enclosures Type 4X Hinged Screw Cover 258-259
JIC Fiberglass Enclosures Type 4X Hinged Quick-Release Cover 260-261
JIC Fiberglass Enclosures Type 4X Hinged Quick-Release Window Cover 262-263
JIC Fiberglass Enclosures Type 4X Premier™ Series Hinged Screw Cover 264-265
JIC Fiberglass Enclosures Type 4X Premier™ Series Hinged Quick-Release Cover 266-267
JIC Fiberglass Enclosures Type 4X Premier™ Series Hinged Quick-Release Clear Cover 268-269
JIC Fiberglass Enclosures Type 4X Small Junction 270-271
JIC Fiberglass Enclosures Type 4X Small Junction 272-273
Fiberglass Wall-Mount Enclosures Type 3R Continuous Hinge Cover 274-275
Fiberglass Wall-Mount Enclosures Type 4X Single-Door 276-277
Fiberglass Wall-Mount Enclosures Type 4X Double-Door 278-279
Fiberglass Ground-Mount Enclosures Type 4X Free-Standing Single-Door 280-281
Fiberglass Ground-Mount Enclosures Type 4X Free-Standing Double-Door 282-283
Fiberglass Pushbutton Enclosures Type 4X In-Line 30mm 284-285
Fiberglass Pushbutton Enclosures Type 4X In-Line 22mm 286-287
Fiberglass Pushbutton Enclosures Type 4X Multi-Hole 30mm 288-289
Non-Metallic Back Panels 290-291
Non-Metallic Accessories 292-294

Polycarbonate Enclosures
Type 4X Hinged and Lift-Off Screw Covers
Data Sheet

Application
- Houses electrical and electronic controls and instruments
- Intended for indoor or outdoor use
- Ideally suited for harsh environments
- Protects against corrosion, windblown dust and rain, sleet and snow, splashing water, hose directed water, and sun/UV and flame protection

Standards
- UL/cUL 50 Listed, UL50e, UL508A UL746C, Type 1, Type 3R, Type 4, Type 4X, Type 12
- Conforms to NEMA Standard for Type 1, Type 3,Type 4X, Type 12
- IEC 60529; IP66
- Temperature Range: -40°F to +248°F (-40°C to +120°C)
- Flammability Rating: UL94-5VA (highest flame resistance)
- Self Extinguishing: Non-flame propagating
- Chemical Resistance: (see chart, pages 464 - 467)

Finish
- Gray color

Accessories
- Back panels (see page 290)
- See accessories (page 294)

Construction
- Enclosures are an impact resistant, non-conductive, light-weight hot compression molded non-Metallic reinforced polycarbonate
- Neoprene rope syle gasket provides watertight, dust-tight environmental seal (poured polyurethane seamless gasket on select sizes)
- Clear and opaque cover styles available
- Captive screws provide smooth surfaces
- Latch options - full non-metallic or 300 series stainless steel used on all external hardware, does not penetrate inside enclosure
- Integral mounting bosses utilize threaded brass inserts accepting #10-32 screws for mounting optional panel
- Rounded edges reduce build-up of dust and debris
- Enclosure can be configured as screw cover or hinged cover
- Thick, robust side wall construction eliminates side wall flexing
- Built in DIN Rail mounting embosses in the back of the enclosure
- Capability to side mount of enclosure panel, DIN or instruments
- Sliding T-Nut allows for infinite panel adjustment back to front
- Multi-directional mounting feet allow mounting flexibility
- Industry leading size range: 6" x 6" to 24" x 24"

Discount Schedule: F2

Subclass: G00

Notes: We can provide special modifications. Consult the factory for your special requirements.

Polycarbonate Enclosures
Type 4X Hinge and Lift-Off Screw Cover
Illustration Sheet and Catalog Number

Enclosure Catalog #		Overall Dimensions H x W x D		Inside Dimensions A x B x C		Mounting Horz. E x F		Mounting Vert. E x F		Mounting 45° E x F	
Clear Cover	Opaque Cover	in.	mm	in.	mm	in.	mm	in.	mm	in	mm
664-4XPCQRCC	664-4XPCQR	7.41 x 8.68 x 5.84	(188 x 223 x 148)	5.94 x 5.94 x 5.02	(151 x 151 x 127)	3.64 x 8.40	(93 x 213)	8.04 x 3.64	(204 x 93)	6.75 x 6.74	(171 x 171)
864-4XPCQRCC	864-4XPCQR	9.41 x 8.68 x 5.86	(239 x 223 x 149)	7.97 x 5.97 x 5.07	(202 x 152 x 129)	5.64 x 8.04	(143 x 213)	10.04 x 3.64	(255 x 93)	8.76 x 6.75	(223 x 171)
884-4XPCQRCC	884-4XPCQR	9.41 x 10.68 x 5.86	(239 x 271 x 149)	7.97 x 7.97 x 5.03	(202 x 202 x 128)	5.63 x 10.03	(143 x 255)	10.04 x 5.63	(255 x 143)	8.74 x 8.78	(222 x 223)
1084-4XPCQRCC	1084-4XPCQR	11.41 x 10.68 x 6.36	(290 x 271 x 161)	9.96 x 7.96 x 5.57	(253 x 202 x 142)	7.64 x 10.04	(194 x 255)	12.04 x 5.64	(306 x 143)	10.76 x 8.75	(273 x 222)
1086-4XPCQRCC	1086-4XPCQR	11.41 x 10.68 x 7.89	(209 x 271 x 200)	9.95 x 7.95 x 7.06	(253 x 202 x 179)	7.63 x 10.03	(194 x 255)	12.03 x 5.63	(306 x 143)	10.76 x 8.75	(273 x 222)
10106-4XPCQRCC	10106-4XPCQR	11.41 x 12.68 x 6.97	(209 x 322 x 177)	9.95 x 9.95 x 6.15	(253 x 253 x 156)	7.63 x 12.03	(194 x 306)	12.03 x 7.63	(306 x 194)	10.76 x 10.75	(273 x 273)
12106-4XPCQRCC	12106-4XPCQR	13.40 x 12.68 x 7.86	(340 x 322 x 200)	11.95 x 9.95 x 7.07	(304 x 253 x 180)	9.64 x 12.04	(245 x 306)	14.04 x 7.64	(357 x 194)	12.76 x 10.75	(324 x 273)
14126-4XPCQRCC	14126-4XPCQR	15.40 x 14.68 x 7.86	(391 x 373 x 200)	13.95 x 11.95 x 7.07	(354 x 304 x 180)	11.64 x 14.04	(296 x 357)	16.04 x 9.64	(407 x 245)	14.76 x 12.75	(375 x 324)
16148-4XPCQRCC	16148-4XPCQR	17.65 x 16.68 x 9.98	(448 x 424 x 253)	15.93 x 13.93 x 9.20	(405 x 354 x 234)	13.64 x 16.04	(347 x 407)	18.04 x 11.64	(458 x 296)	16.76 x 14.75	(426 x 375)
181610-4XPCQRCC	181610-4XPCQR	19.41 x 18.68 x 11.90	(493 x 474 x 302)	17.83 x 15.83 x 11.08	(453 x 402 x 281)	15.64 x 18.04	(397 x 458)	20.04 x 13.64	(509 x 347)	18.75 x 16.74	(476 x 425)
20168-4XPCQRCC	20168-4XPCQR	21.41 x 18.68 x 9.97	(544 x 474 x 253)	19.86 x 15.86 x 9.15	(504 x 403 x 232)	18.75 x 19.17	(476 x 487)	23.15 x 14.75	(588 x 375)	21.91 x 17.87	(557 x 454)
242410-4XPCQRCC	242410-4XPCQR	25.41 x 26.68 x 11.41	(645 x 678 x 290)	23.91 x 23.91 x 11.88	(607 x 607 x 302)	N/A	N/A	25.69 x 18.00	(653 x 457)	N/A	N/A

Enclosure Catalog #		Dimensions										
		J		K		L		M		N		
Clear Cover	Opaque Cover	in.	mm	in.	mm	in.	mm	in.	mm	in.	mm	Panel No.
664-4XPCQRCC	664-4XPCQR	4.50	(114)	4.25	(108)	4.25	(108)	8.89	(226)	8.89	(226)	AW66__
864-4XPCQRCC	864-4XPCQR	4.56	(116)	6.25	(159)	4.25	(108)	10.89	(277)	8.89	(226)	AW86__
884-4XPCQRCC	884-4XPCQR	4.53	(115)	6.25	(159)	6.25	(159)	10.88	(277)	10.88	(277)	AW88__
1084-4XPCQRCC	1084-4XPCQR	5.05	(128)	8.25	(210)	6.25	(159)	12.89	(327)	10.89	(277)	AW108__
1086-4XPCQRCC	1086-4XPCQR	6.54	(166)	8.25	(210)	6.25	(159)	12.88	(327)	10.88	(277)	AW108__
10106-4XPCQRCC	10106-4XPCQR	5.65	(144)	8.25	(210)	8.25	(210)	12.88	(327)	12.88	(327)	AW1010__
12106-4XPCQRCC	12106-4XPCQR	6.56	(167)	10.25	(260)	8.25	(210)	14.89	(378)	12.89	(327)	AW1210__
14126-4XPCQRCC	14126-4XPCQR	6.56	(167)	12.25	(311)	10.25	(260)	16.89	(429)	14.89	(378)	AW1412__
16148-4XPCQRCC	16148-4XPCQR	8.68	(220)	14.25	(362)	12.25	(311)	18.89	(480)	16.89	(429)	AW1614__
181610-4XPCQRCC	181610-4XPCQR	10.56	(268)	16.25	(413)	14.25	(362)	20.89	(531)	18.89	(480)	AW1816__
20168-4XPCQRCC	20168-4XPCQR	8.65	(220)	18.25	(464)	14.25	(362)	24.00	(610)	20.02	(509)	AW2016__J
242410-4XPCQRCC	242410-4XPCQR	10.56	(268)	22.25	(565)	22.25	(565)	26.69	(678)	21.86	(555)	AW2424__J

Panel Finishes

Example: AW108__

Insert for __

P = Carbon Steel
SP = Stainless Steel
AP = Aluminum

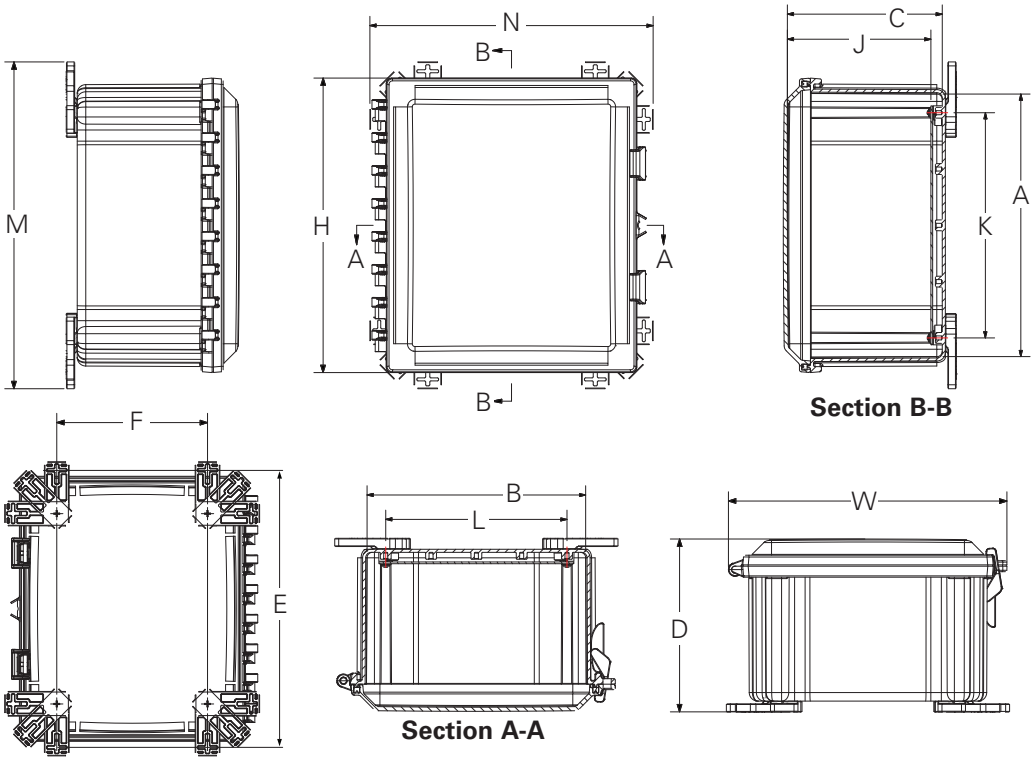

Notes: Dimensions are in inches. Millimeters shown are for reference only. Data subject to change without notice.

JIC Fiberglass Enclosures
Type 4X Lift-Off Screw Cover
Data Sheet

Application
- Houses electrical and electronic controls and instruments
- Intended for indoor or outdoor use
- Ideally suited for harsh environments
- Protects against corrosion, windblown dust and rain, splashing water, hose directed water, and prolonged submersion

Standards
- UL/cUL 50 Listed, Type 1, Type 3, Type 4X, Type 6P, Type 12
- Conforms to NEMA Standard for Type 1, Type 3, Type 4X, Type 6P, Type 12
- Temperature Range: -40°F to 250°F (-40°C to 120°C)
- Flammability Rating: UL94-5V
- Self Extinguishing: Non-flame propagating
- Chemical Resistance: (see chart, pages 464 - 467)

Finish
- Gray color

Accessories
- Back Panels (see page 290)
- See accessories (pages 292 - 294)

Construction
- Enclosures are an impact resistant, non-conductive, light-weight hot compression molded Non-Metallic reinforced polyester
- Poured polyurethane seamless gasket provides watertight, dust-tight environmental seal
- Captive screws provide smooth surfaces
- 300 series stainless steel used on all external hardware
- Molded in flange for ease of mounting
- Stainless steel beaded chain for securing cover after lift off
- Integral mounting bosses utilize threaded brass inserts accepting #10-32 screws for mounting optional panel
- Rounded edges reduce build-up of dust and debris

Discount Schedule: F2

Subclass: G00

Notes: We can provide special modifications. Consult the factory for your special requirements.

JIC Fiberglass Enclosures
Type 4X Lift-Off Screw Cover
Illustration Sheet and Catalog Number

Enclosure Catalog #	Overall Dimensions H x W x D		Inside Dimensions A x B x C		E		F		Hole Dia.		Panel No.
	in.	mm	in.	mm	in.	mm	in.	mm	in.	mm	
644-4XFLC	7.50 x 5.43 x 4.75	191 x 138 x 121	5.84 x 3.85 x 4.45	148 x 98 x 113	6.75	171	2.00	51	0.31	8	AW64__
664-4XFLC	7.50 x 7.50 x 4.75	191 x 191 x 121	5.72 x 5.72 x 4.45	145 x 145 x 113	6.75	171	4.00	101	0.31	8	AW66__
864-4XFLC	9.62 x 7.50 x 4.74	244 x 191 x 121	7.73 x 5.74 x 4.45	196 x 146 x 113	8.88	225	4.00	101	0.31	8	AW86__
884-4XFLC	9.56 x 9.38 x 4.89	243 x 238 x 124	7.73 x 7.73 x 4.64	196 x 196 x 118	8.75	222	6.00	152	0.31	8	AW88__
1084-4XFLC	11.62 x 9.41 x 4.25	295 x 239 x 108	9.73 x 7.73 x 3.98	247 x 196 x 101	10.75	273	6.00	152	0.31	8	AW108__
* 1085-4XFLC	11.62 x 9.37 x 5.06	295 x 238 x 129	9.73 x 7.73 x 4.83	247 x 196 x 123	10.75	273	6.00	152	0.31	8	AW108__
12105-4XFLC	13.56 x 11.43 x 5.21	344 x 291 x 132	11.79 x 9.80 x 4.94	299 x 249 x 125	12.75	324	8.00	203	0.31	8	AW1210__
12126-4XFLC	13.56 x 13.38 x 6.36	344 x 340 x 161	11.70 x 11.70 x 6.11	297 x 297 x 155	12.75	324	10.00	254	0.31	8	AW1212__
1476-4XFLC	15.87 x 8.75 x 6.81	403 x 222 x 173	14.00 x 7.00 x 6.56	356 x 178 x 167	15.00	381	5.00	127	0.31	8	AW147__
14126-4XFLC	15.50 x 13.50 x 6.25	394 x 343 x 159	13.53 x 11.55 x 5.94	344 x 293 x 151	14.62	371	10.00	254	0.31	8	AW1412__
16146-4XFLC	17.53 x 15.46 x 6.23	445 x 393 x 158	15.63 x 13.60 x 5.94	397 x 345 x 151	16.75	425	12.00	305	0.31	8	AW1614__
18168-4XFLC	19.62 x 17.61 x 8.82	498 x 447 x 224	17.69 x 15.69 x 8.45	449 x 399 x 215	18.88	479	12.00	305	0.31	8	AW1816__
20168-4XFLC	22.00 x 17.68 x 8.83	559 x 449 x 224	19.72 x 15.72 x 8.45	501 x 399 x 215	21.25	540	10.00	254	0.31	8	AW2016__J

Enclosure Catalog #	Dimensions J		K		L		M		N	
	in.	mm	in.	mm	in.	mm	in.	mm	in.	mm
644-4XFLC	4.00	101	4.25	108	2.25	57	0.25	6	7.39	188
664-4XFLC	4.00	101	4.25	108	4.25	108	0.25	6	7.52	191
864-4XFLC	4.00	101	6.25	159	4.25	108	0.25	6	9.50	242
884-4XFLC	4.06	103	6.25	159	6.25	159	0.25	6	9.37	238
1084-4XFLC	3.50	89	8.25	209	6.25	159	0.25	6	11.35	288
* 1085-4XFLC	4.37	111	8.25	209	6.25	159	0.25	6	11.37	289
12105-4XFLC	4.50	114	10.25	260	8.25	209	0.25	6	13.41	341
12126-4XFLC	5.53	140	10.25	260	10.25	260	0.25	6	13.38	340
1476-4XFLC	6.12	156	12.25	311	5.25	133	0.25	6	15.75	400
14126-4XFLC	5.37	137	12.25	311	10.25	260	0.25	6	15.47	393
16146-4XFLC	5.36	136	14.25	362	12.25	311	0.25	6	17.45	443
18168-4XFLC	7.99	203	16.25	413	14.25	362	0.25	6	19.61	498
20168-4XFLC	8.00	203	18.25	464	14.25	362	0.25	6	21.68	551

* Crowned Cover

Panel Finishes

Example: AW108__

Insert for __

P = Carbon Steel
SP = Stainless Steel
AP = Aluminum

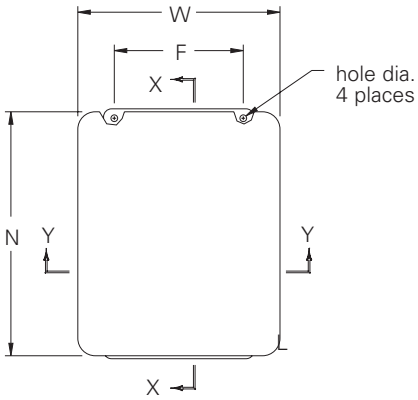

Front View

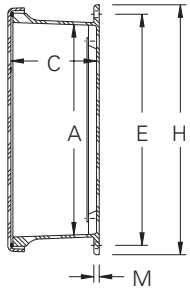

Section X-X

Back Panel
(see page 290)

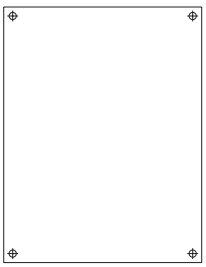

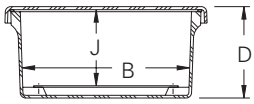

Section Y-Y

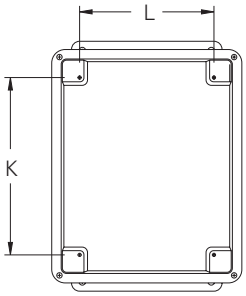

Front View Without Cover

Notes: Dimensions are in inches. Millimeters shown are for reference only. Data subject to change without notice.

JIC Fiberglass Enclosures
Type 4X Hinged Screw Cover
Data Sheet

Application
- Houses electrical and electronic controls and instruments
- Intended for indoor or outdoor use
- Ideally suited for harsh environments
- Protects against corrosion, windblown dust and rain, splashing water, hose directed water, and prolonged submersion

Standards
- UL/cUL 50 Listed, Type 1, Type 3, Type 4X, Type 6P, Type 12
- Conforms to NEMA Standard for Type 1, Type 3, Type 4X, Type 6P, Type 12
- Temperature Range: -40°F to 250°F (-40°C to 120°C)
- Flammability Rating: UL94-5V
- Self Extinguishing: Non-flame propagating
- Chemical Resistance: (see chart, pages 464 - 467)

Finish
- Gray color

Accessories
- Back Panels (see page 290)
- See accessories (pages 292 - 294)

Construction
- Enclosures are an impact resistant, non-conductive, light-weight hot compression molded Non-Metallic reinforced polyester
- Poured polyurethane seamless gasket provides watertight, dust-tight environmental seal
- Captive screws provide smooth surfaces
- 300 series stainless steel used on all external hardware
- Integral flange molded in place for ease of mounting
- Integral mounting bosses utilize threaded brass inserts accepting #10-32 screws for mounting optional panel
- Rounded edges reduce build-up of dust and debris
- Full length stainless steel hinged cover

Discount Schedule: F2

Subclass: G00

Notes: We can provide special modifications. Consult the factory for your special requirements.

JIC Fiberglass Enclosures
Type 4X Hinged Screw Cover
Illustration Sheet and Catalog Number

Enclosure Catalog #	Overall Dimensions H x W x D in.	Overall Dimensions H x W x D mm	Inside Dimensions A x B x C in.	Inside Dimensions A x B x C mm	E in.	E mm	F in.	F mm	Hole Dia. in.	Hole Dia. mm	Panel No.
644-4XFCHSC	7.50 x 5.43 x 4.75	191 x 138 x 121	5.84 x 3.85 x 4.45	148 x 98 x 113	6.75	171	2.00	51	0.31	8	AW64__
664-4XFCHSC	7.50 x 7.50 x 4.75	191 x 191 x 121	5.72 x 5.72 x 4.45	145 x 145 x 113	6.75	171	4.00	101	0.31	8	AW66__
864-4XFCHSC	9.62 x 7.50 x 4.74	244 x 191 x 121	7.73 x 5.74 x 4.45	196 x 146 x 113	8.88	225	4.00	101	0.31	8	AW86__
884-4XFCHSC	9.56 x 9.38 x 4.89	243 x 238 x 124	7.73 x 7.73 x 4.64	196 x 196 x 119	8.75	222	6.00	152	0.31	8	AW88__
1084-4XFCHSC	11.62 x 9.41 x 4.25	295 x 239 x 108	9.73 x 7.73 x 3.98	247 x 196 x 101	10.75	273	6.00	152	0.31	8	AW108__
* 1085-4XFCHSC	11.62 x 9.37 x 5.06	295 x 238 x 129	9.73 x 7.73 x 4.83	247 x 196 x 123	10.75	273	6.00	152	0.31	8	AW108__
12105-4XFCHSC	13.56 x 11.43 x 5.21	344 x 291 x 132	11.79 x 9.80 x 4.94	299 x 249 x 125	12.75	324	8.00	203	0.31	8	AW1210__
12126-4XFCHSC	13.56 x 13.38 x 6.36	344 x 340 x 161	11.70 x 11.70 x 6.11	297 x 297 x 155	12.75	324	10.00	254	0.31	8	AW1212__
1476-4XFCHSC	15.87 x 8.75 x 6.81	403 x 222 x 173	14.00 x 7.00 x 6.56	356 x 178 x 167	15.00	381	5.00	127	0.31	8	AW147__
14126-4XFCHSC	15.50 x 13.50 x 6.25	394 x 343 x 159	13.53 x 11.55 x 5.94	344 x 293 x 151	14.62	371	10.00	254	0.31	8	AW1412__
16146-4XFCHSC	17.53 x 15.46 x 6.23	445 x 393 x 158	15.63 x 13.60 x 5.94	397 x 345 x 151	16.75	425	12.00	305	0.31	8	AW1614__
18168-4XFCHSC	19.62 x 17.61 x 8.82	498 x 447 x 224	17.69 x 15.69 x 8.45	449 x 399 x 215	18.88	479	12.00	305	0.31	8	AW1816__
20168-4XFCHSC	22.00 x 17.68 x 8.83	559 x 449 x 224	19.72 x 15.72 x 8.45	501 x 399 x 215	21.25	540	10.00	254	0.31	8	AW2016__J

Enclosure Catalog #	Dimensions J in.	J mm	K in.	K mm	L in.	L mm	M in.	M mm	N in.	N mm
644-4XFCHSC	4.00	101	4.25	108	2.25	57	0.25	6	7.39	188
664-4XFCHSC	4.00	101	4.25	108	4.25	108	0.25	6	7.52	191
864-4XFCHSC	4.00	101	6.25	159	4.25	108	0.25	6	9.50	242
884-4XFCHSC	4.06	103	6.25	159	6.25	159	0.25	6	9.37	238
1084-4XFCHSC	3.50	89	8.25	209	6.25	159	0.25	6	11.35	288
* 1085-4XFCHSC	4.37	111	8.25	209	6.25	159	0.25	6	11.37	289
12105-4XFCHSC	4.50	114	10.25	260	8.25	209	0.25	6	13.41	341
12126-4XFCHSC	5.53	140	10.25	260	10.25	260	0.25	6	13.38	340
1476-4XFCHSC	6.12	156	12.25	311	5.25	133	0.25	6	15.75	400
14126-4XFCHSC	5.37	137	12.25	311	10.25	260	0.25	6	15.47	393
16146-4XFCHSC	5.36	136	14.25	362	12.25	311	0.25	6	17.45	443
18168-4XFCHSC	7.99	203	16.25	413	14.25	362	0.25	6	19.61	498
20168-4XFCHSC	8.00	203	18.25	464	14.25	362	0.25	6	21.68	551

* Crowned Cover

Panel Finishes

Example: AW108__

Insert for __

P = Carbon Steel
SP = Stainless Steel
AP = Aluminum

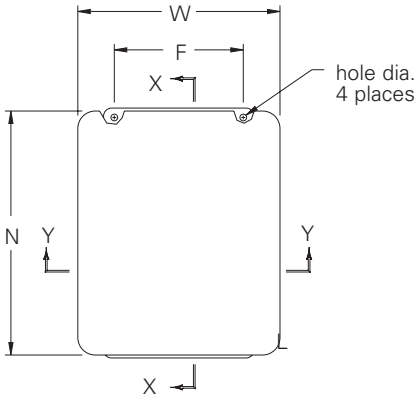

Front View

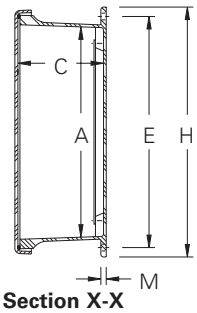

Section X-X

Back Panel
(see page 290)

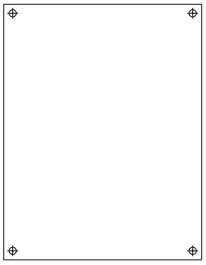

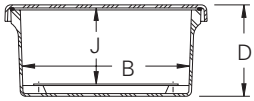

Section Y-Y

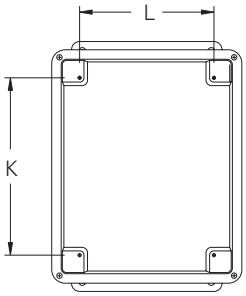

Front View Without Cover

Notes: Dimensions are in inches. Millimeters shown are for reference only. Data subject to change without notice.

JIC Fiberglass Enclosures
Type 4X Hinged Quick-Release Cover
Data Sheet

Application
- Houses electrical and electronic controls and instruments
- Intended for indoor or outdoor use
- Ideally suited for harsh environments
- Protects against corrosion, windblown dust and rain, splashing water, hose directed water, and prolonged submersion

Standards
- UL/cUL 50 Listed, Type 1, Type 3, Type 4X, Type 6P, Type 12
- Conforms to NEMA Standard for Type 1, Type 3, Type 4X, Type 6P, Type 12
- Temperature Range: -40°F to 250°F (-40°C to 120°C)
- Flammability Rating: UL94-5V
- Self Extinguishing: Non-flame propagating
- Chemical Resistance: (see chart, pages 464 - 467)

Finish
- Gray color

Accessories
- Back Panels (see page 290)
- See accessories (pages 292 - 294)

Construction
- Enclosures are an impact resistant, non-conductive, light-weight hot compression molded Non-Metallic reinforced polyester
- Poured polyurethane seamless gasket provides watertight, dust-tight environmental seal
- Captive screws provide smooth surfaces
- 300 series stainless steel used on all external hardware
- Integral flange molded in place for ease of mounting
- Integral mounting bosses utilize threaded brass inserts accepting #10-32 screws for mounting optional panel
- Rounded edges reduce build-up of dust and debris
- Full length stainless steel hinged cover
- Padlocking latches provide quick access and optional closure locking (padlock not included)

Discount Schedule: F2

Subclass: G00

Notes: We can provide special modifications. Consult the factory for your special requirements.

JIC Fiberglass Enclosures
Type 4X Hinged Quick-Release Cover
Illustration Sheet and Catalog Number

Enclosure Catalog #	Overall Dimensions H x W x D		Inside Dimensions A x B x C		E		F		Hole Dia.		Panel No.
	in.	mm	in.	mm	in.	mm	in.	mm	in.	mm	
644-4XFCHQRC	7.50 x 5.43 x 4.75	191 x 138 x 121	5.84 x 3.85 x 4.45	148 x 98 x 113	6.75	171	2.00	51	0.31	8	AW64__
664-4XFCHQRC	7.50 x 7.50 x 4.75	191 x 191 x 121	5.72 x 5.72 x 4.45	145 x 145 x 113	6.75	171	4.00	101	0.31	8	AW66__
864-4XFCHQRC	9.62 x 7.50 x 4.74	244 x 191 x 121	7.73 x 5.74 x 4.45	196 x 146 x 113	8.88	225	4.00	101	0.31	8	AW86__
884-4XFCHQRC	9.56 x 9.38 x 4.87	243 x 238 x 123	7.73 x 7.73 x 4.62	196 x 196 x 117	8.75	222	6.00	152	0.31	8	AW88__
1084-4XFCHQRC	11.62 x 9.41 x 4.25	295 x 239 x 108	9.73 x 7.73 x 3.98	247 x 196 x 101	10.75	273	6.00	152	0.31	8	AW108__
* 1085-4XFCHQRC	11.62 x 9.37 x 5.06	295 x 238 x 129	9.73 x 7.73 x 4.83	247 x 196 x 123	10.75	273	6.00	152	0.31	8	AW108__
12105-4XFCHQRC	13.56 x 11.43 x 5.21	344 x 291 x 132	11.79 x 9.80 x 4.94	299 x 249 x 125	12.75	324	8.00	203	0.31	8	AW1210__
12126-4XFCHQRC	13.56 x 13.38 x 6.36	344 x 340 x 161	11.70 x 11.70 x 6.11	297 x 297 x 155	12.75	324	10.00	254	0.31	8	AW1212__
1476-4XFCHQRC	15.87 x 8.75 x 6.81	403 x 222 x 173	14.00 x 7.00 x 6.56	356 x 178 x 167	15.00	381	5.00	127	0.31	8	AW147__
14126-4XFCHQRC	15.50 x 13.50 x 6.25	394 x 343 x 159	13.53 x 11.55 x 5.94	344 x 293 x 151	14.62	371	10.00	254	0.31	8	AW1412__
16146-4XFCHQRC	17.53 x 15.46 x 6.23	445 x 393 x 158	15.63 x 13.60 x 5.94	397 x 345 x 151	16.75	425	12.00	305	0.31	8	AW1614__
18168-4XFCHQRC	19.62 x 17.61 x 8.82	498 x 447 x 224	17.69 x 15.69 x 8.45	449 x 399 x 215	18.88	479	12.00	305	0.31	8	AW1816__
20168-4XFCHQRC	22.00 x 17.68 x 8.83	559 x 449 x 224	19.72 x 15.72 x 8.45	501 x 399 x 215	21.25	540	10.00	254	0.31	8	AW2016__J

Enclosure Catalog #	Dimensions J		K		L		M		N	
	in.	mm	in.	mm	in.	mm	in.	mm	in.	mm
644-4XFCHQRC	4.00	101	4.25	108	2.25	57	0.25	6	7.39	188
664-4XFCHQRC	4.00	101	4.25	108	4.25	108	0.25	6	7.52	191
864-4XFCHQRC	4.00	101	6.25	159	4.25	108	0.25	6	9.50	242
884-4XFCHQRC	3.98	101	6.25	159	6.25	159	0.25	6	9.38	238
1084-4XFCHQRC	3.50	89	8.25	209	6.25	159	0.25	6	11.35	288
* 1085-4XFCHQRC	4.37	111	8.25	209	6.25	159	0.25	6	11.37	289
12105-4XFCHQRC	4.50	114	10.25	260	8.25	209	0.25	6	13.41	341
12126-4XFCHQRC	5.53	140	10.25	260	10.25	260	0.25	6	13.38	340
1476-4XFCHQRC	6.12	156	12.25	311	5.25	133	0.25	6	15.75	400
14126-4XFCHQRC	5.37	137	12.25	311	10.25	260	0.25	6	15.47	393
16146-4XFCHQRC	5.36	136	14.25	362	12.25	311	0.25	6	17.45	443
18168-4XFCHQRC	7.99	203	16.25	413	14.25	362	0.25	6	19.61	498
20168-4XFCHQRC	8.00	203	18.25	464	14.25	362	0.25	6	21.68	551

* Crowned Cover

Panel Finishes

Example: AW108__

Insert for __

P = Carbon Steel
SP = Stainless Steel
AP = Aluminum

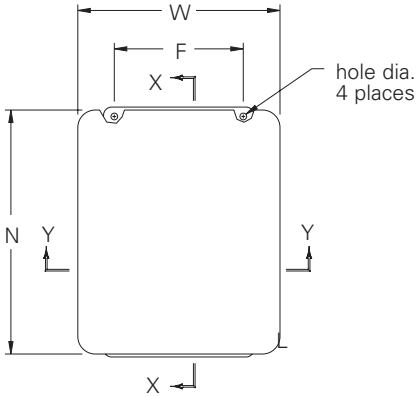

Front View

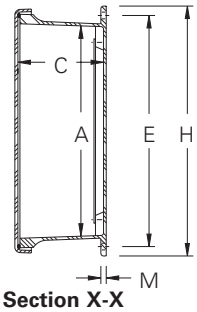

Section X-X

Back Panel
(see page 290)

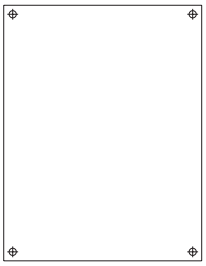

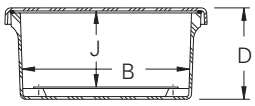

Section Y-Y

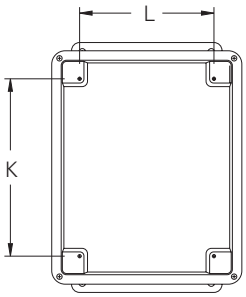

Front View Without Cover

Notes: Dimensions are in inches. Millimeters shown are for reference only. Data subject to change without notice.

JIC Fiberglass Enclosures
Type 4X Hinged Quick-Release Window Cover
Data Sheet

Application
- Houses electrical and electronic controls and instruments
- Intended for indoor or outdoor use
- Ideally suited for harsh environments
- Protects against corrosion, windblown dust and rain, splashing water, hose directed water, and prolonged submersion

Standards
- UL/cUL 50 Listed, Type 1, Type 3, Type 4X, Type 6P, Type 12
- Conforms to NEMA Standard for Type 1, Type 3, Type 4X, Type 6P, Type 12
- Temperature Range: -40°F to 250°F (-40°C to 120°C)
- Flammability Rating: UL94-5V
- Self Extinguishing: Non-flame propagating
- Chemical Resistance: (see chart, pages 464 - 467)

Finish
- Gray color

Accessories
- Back Panels (see page 290)
- See accessories (pages 292 - 294)

Construction
- Enclosures are an impact resistant, non-conductive, light-weight hot compression molded Non-Metallic reinforced polyester
- Poured polyurethane seamless gasket provides watertight, dust-tight environmental seal
- Captive screws provide smooth surfaces
- 300 series stainless steel used on all external hardware
- Integral flange molded in place for ease of mounting
- Integral mounting bosses utilize threaded brass inserts accepting #10-32 screws for mounting optional panel
- Rounded edges reduce build-up of dust and debris
- Full length stainless steel hinged cover
- Padlocking latches provide quick access and optional closure locking (padlock not included)
- Window utilizes a scratch resistant UVA acrylic material to provide internal component visibility

Discount Schedule: F2

Subclass: G00

Notes: We can provide special modifications. Consult the factory for your special requirements.

JIC Fiberglass Enclosures
Type 4X Hinged Quick-Release Window Cover
Illustration Sheet and Catalog Number

Enclosure Catalog #	Overall Dimensions H x W x D		Inside Dimensions A x B x C		Window Area (Maximum)		Mtg. Dimension E		Mtg. Dimension F		Panel No.
	in.	mm	in.	mm	in.	mm	in.	mm	in.	mm	
644-4XFCHQRCW	7.50 x 5.43 x 4.75	191 x 138 x 121	5.84 x 3.85 x 4.45	148 x 98 x 113	4.25 x 2.25	108 x 57	6.75	171	2.00	51	AW64__
664-4XFCHQRCW	7.50 x 7.50 x 4.75	191 x 191 x 121	5.72 x 5.72 x 4.45	145 x 145 x 113	4.25 x 4.25	108 x 108	6.75	171	4.00	101	AW66__
864-4XFCHQRCW	9.62 x 7.50 x 4.74	244 x 191 x 121	7.73 x 5.74 x 4.45	196 x 146 x 113	6.25 x 4.25	159 x 108	8.88	225	4.00	101	AW86__
1084-4XFCHQRCW	11.62 x 9.41 x 4.25	295 x 239 x 108	9.73 x 7.73 x 3.98	247 x 196 x 101	8.25 x 6.25	210 x 159	10.75	273	6.00	152	AW108__
* 1085-4XFCHQRCW	11.62 x 9.37 x 5.06	295 x 238 x 129	9.73 x 7.73 x 4.83	247 x 196 x 123	8.25 x 6.25	210 x 159	10.75	273	6.00	152	AW108__
12105-4XFCHQRCW	13.56 x 11.43 x 5.21	344 x 291 x 132	11.79 x 9.80 x 4.94	299 x 249 x 125	10.25 x 8.25	260 x 210	12.75	324	8.00	203	AW1210__
1476-4XFCHQRCW	15.87 x 8.75 x 6.81	403 x 222 x 173	14.00 x 7.00 x 6.56	356 x 178 x 167	12.75 x 5.75	324 x 146	15.00	381	5.00	127	AW147__
14126-4XFCHQRCW	15.50 x 13.50 x 6.25	394 x 343 x 159	13.53 x 11.55 x 5.94	344 x 293 x 151	12.25 x 10.25	311 x 260	14.62	371	10.00	254	AW1412__
16146-4XFCHQRCW	17.53 x 15.46 x 6.23	445 x 393 x 158	15.63 x 13.60 x 5.94	397 x 345 x 151	14.25 x 12.25	362 x 311	16.75	425	12.00	305	AW1614__
18168-4XFCHQRCW	19.62 x 17.61 x 8.82	498 x 447 x 224	17.69 x 15.69 x 8.45	449 x 399 x 215	16.25 x 14.25	413 x 362	18.88	479	12.00	305	AW1816__
20168-4XFCHQRCW	22.00 x 17.68 x 8.83	559 x 449 x 224	19.72 x 15.72 x 8.45	501 x 399 x 215	18.25 x 14.25	464 x 362	21.25	540	10.00	254	AW2016__J

* Crowned Cover

Enclosure Catalog #	Hole Dia.		Dimensions J		K		L		M		N	
	in.	mm	in.	mm	in.	mm	in.	mm	in.	mm	in.	mm
644-4XFCHQRCW	0.31	8	4.00	101	4.25	108	2.25	57	0.25	6	7.39	188
664-4XFCHQRCW	0.31	8	4.00	101	4.25	108	4.25	108	0.25	6	7.52	191
864-4XFCHQRCW	0.31	8	4.00	101	6.25	159	4.25	108	0.25	6	9.50	242
1084-4XFCHQRCW	0.31	8	3.50	89	8.25	209	6.25	159	0.25	6	11.35	288
* 1085-4XFCHQRCW	0.31	8	4.37	111	8.25	209	6.25	159	0.25	6	11.37	289
12105-4XFCHQRCW	0.31	8	4.50	114	10.25	260	8.25	209	0.25	6	13.41	341
1476-4XFCHQRCW	0.31	8	6.12	156	12.25	311	5.25	133	0.25	6	15.75	400
14126-4XFCHQRCW	0.31	8	5.37	137	12.25	311	10.25	260	0.25	6	15.47	393
16146-4XFCHQRCW	0.31	8	5.36	136	14.25	362	12.25	311	0.25	6	17.45	443
18168-4XFCHQRCW	0.31	8	7.99	203	16.25	413	14.25	362	0.25	6	19.61	498
20168-4XFCHQRCW	0.31	8	8.00	203	18.25	464	14.25	362	0.25	6	21.68	551

Panel Finishes

Example: AW108__

Insert for __

P = Carbon Steel
SP = Stainless Steel
AP = Aluminum

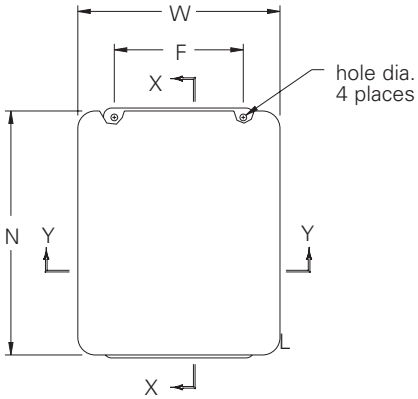

Front View

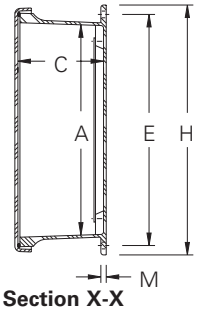

Section X-X

Back Panel
(see page 290)

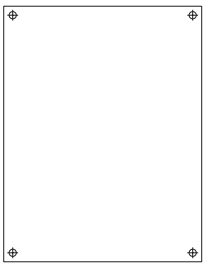

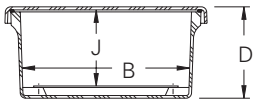

Section Y-Y

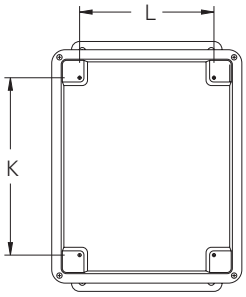

Front View Without Cover

Notes: Dimensions are in inches. Millimeters shown are for reference only. Data subject to change without notice.

JIC Fiberglass Enclosures
Type 4X Premier™ Series Hinged Screw Cover
Data Sheet

Application
- Houses electrical and electronic controls and instruments
- Intended for indoor or outdoor use
- Ideally suited for harsh environments
- Protects against corrosion, windblown dust and rain, splashing water, and hose directed water

Standards
- UL/cUL 50 Listed, Type 1, Type 3, Type 3s, Type 4X, Type 12, Type 13
- Conforms to NEMA Standard for Type 1, Type 3, Type 3s, Type 4X, Type 12, Type 13
- Temperature Range: -40°F to 250°F (-40°C to 120°C)
- Flammability Rating: UL94-5V
- Self Extinguishing: Non-halogenated, Non-flame propagating
- Chemical Resistance: (see chart, pages 464 - 467)
- NFPA No. 101 Flame Spread, Class A (1)

Finish
- Gray color

Accessories
- Back Panels (see page 290)
- Mounting Foot kits (see page 294)
- See accessories (pages 292 - 294)

Construction
- Enclosures are an impact resistant, non-conductive, light-weight hot compression molded Non-Metallic reinforced polyester
- Poured polyurethane seamless gasket provides watertight, dust-tight environmental seal
- Captive screws provide smooth surfaces
- 300 series stainless steel used on all external hardware
- Integral mounting bosses utilize threaded brass inserts accepting #10-32 screws for mounting optional panel
- Rounded edges reduce build-up of dust and debris
- Full 180° door opening

Discount Schedule: F2

Subclass: G00

Notes: We can provide special modifications. Consult the factory for your special requirements.

JIC Fiberglass Enclosures
Type 4X Premier™ Series Hinged Screw Cover
Illustration Sheet and Catalog Number

Enclosure Catalog #	Overall Dimensions H x W x D		Inside Dimensions A x B x C		Mtg. Dimension P x R		Optional Feet Mtg. E x F		Panel No.
	in.	mm	in.	mm	in.	mm	in.	mm	
664-SDF	7.41x7.79x4.31	188x198x109	6.77x6.77x4.06	172x172x103	5.93x4.00	150x101	8.24x4.00	209x101	AW66__
864-SDF	9.41x7.79x4.31	239x198x109	8.77x6.77x4.06	228x172x103	7.91x4.00	201x101	10.21x4.00	259x101	AW86__
884-SDF	9.39x9.76x4.31	238x248x109	8.74x8.74x4.06	222x222x103	7.91x6.00	201x152	10.21x6.00	259x152	AW88__
1086-SDF	11.42x9.79x6.31	290x248x160	10.73x8.73x6.06	272x222x154	9.89x6.00	251x152	12.19x6.00	309x152	AW108__
12106-SDF	13.45x11.83x6.31	341x300x160	12.69x10.69x6.06	322x271x154	11.88x8.00	302x203	14.18x8.00	360x203	AW1210__
14126-SDF	15.49x13.86x6.34	393x352x161	14.72x12.72x6.06	374x323x154	13.91x10.00	353x254	16.21x10.00	412x254	AW1412__
14128-SDF	15.49x13.86x8.34	393x352x212	14.66x12.66x8.06	372x321x205	13.88x10.00	352x254	16.19x10.00	411x254	AW1412__
16148-SDF	17.58x15.96x8.34	446x405x212	16.69x14.69x8.06	424x373x205	15.96x12.00	405x205	18.26x12.00	464x305	AW1614__
181610-SDF	19.77x18.15x10.34	502x461x262	18.63x16.63x10.06	473x422x255	17.94x14.00	455x355	20.24x14.00	514x355	AW1816__
201610-SDF	21.79x18.16x10.34	553x461x262	20.63x16.63x10.06	524x422x255	19.96x14.00	507x355	22.26x14.00	565x355	AW2016__J

Enclosure Catalog #	Dimensions K		L		S		T		N		J		M	
	in.	mm	in.	mm	in.	mm	in.	mm	in.	mm	in.	mm	in.	mm
664-SDF	4.25	108	4.25	108	3.60	91	0.38	9.6	9.02	229	4.56	116	0.25	6.35
864-SDF	6.25	159	4.25	108	3.60	91	0.38	9.6	10.98	279	4.56	116	0.25	6.35
884-SDF	6.25	159	6.25	159	3.60	91	0.38	9.6	10.98	279	4.56	116	0.25	6.35
1086-SDF	8.25	210	6.25	159	5.60	142	0.38	9.6	12.96	329	6.56	167	0.25	6.35
12106-SDF	10.25	260	8.25	210	5.60	142	0.38	9.6	14.95	380	6.56	167	0.25	6.35
14126-SDF	12.25	311	10.25	260	5.60	142	0.38	9.6	16.98	431	6.59	167	0.25	6.35
14128-SDF	12.25	311	10.25	260	7.60	193	0.38	9.6	16.96	431	8.59	218	0.25	6.35
16148-SDF	14.25	362	12.25	311	7.60	193	0.38	9.6	19.04	483	8.59	218	0.25	6.35
181610-SDF	16.25	413	14.25	362	9.60	244	0.38	9.6	21.02	534	10.59	269	0.25	6.35
201610-SDF	18.25	463	14.25	362	9.59	244	0.38	9.6	23.04	585	10.59	269	0.25	6.35

Panel Finishes

Example: AW108__

Insert for __

P = Carbon Steel
SP = Stainless Steel
AP = Aluminum

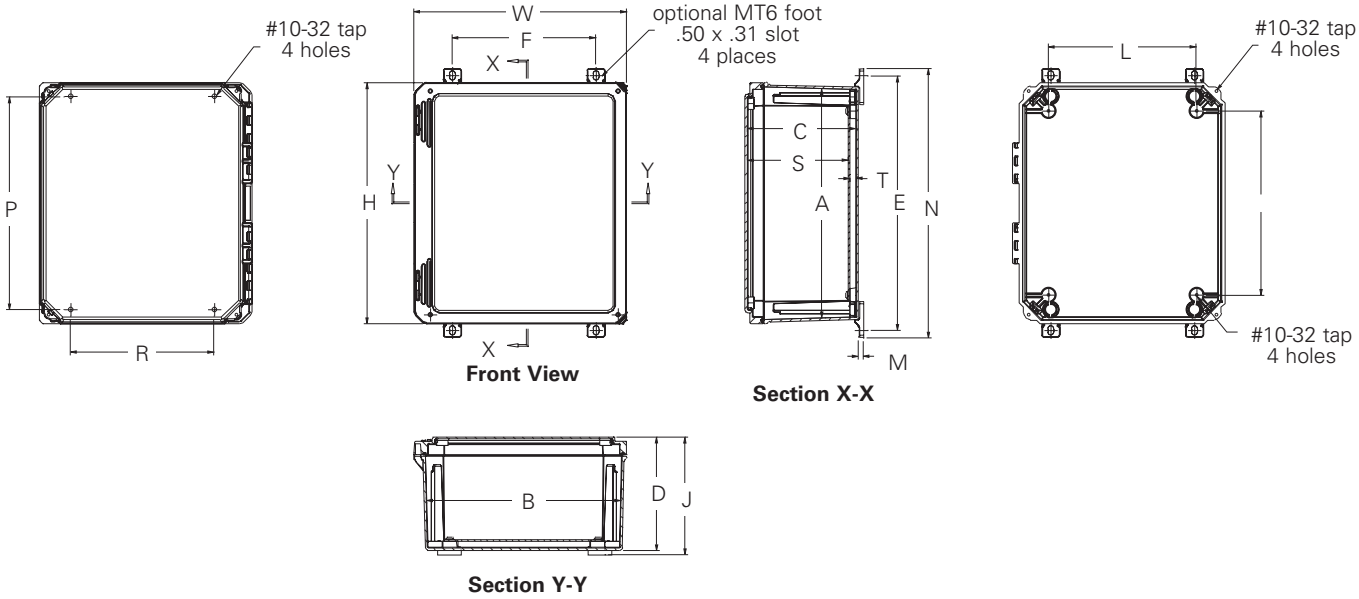

Notes: Dimensions are in inches. Millimeters shown are for reference only. Data subject to change without notice.

JIC Fiberglass Enclosures
Type 4X Premier™ Series Hinged Quick-Release Cover
Data Sheet

Application
- Houses electrical and electronic controls and instruments
- Intended for indoor or outdoor use
- Ideally suited for harsh environments
- Protects against corrosion, windblown dust and rain, splashing water, and hose directed water

Standards
- UL/cUL 50 Listed, Type 1, Type 3, Type 3s, Type 4X, Type 12, Type 13
- Conforms to NEMA Standard for Type 1, Type 3, Type 3s, Type 4X, Type 12, Type 13
- Temperature Range: -40°F to 250°F (-40°C to 120°C)
- Flammability Rating: UL94-5V
- Window Flammability Rating: UL94V-0
- Self Extinguishing: Non-halogenated, Non-flame propagating
- Chemical Resistance: (see chart, pages 464 - 467)
- NFPA No. 101 Flame Spread, Class A (1)

Finish
- Gray color

Accessories
- Back Panels (see page 290)
- Mounting Foot kits (see page 294)
- See accessories (pages 292 - 294)

Construction
- Enclosures are an impact resistant, non-conductive, light-weight hot compression molded Non-Metallic reinforced polyester
- Poured polyurethane seamless gasket provides watertight, dust-tight environmental seal
- Captive screws provide smooth surfaces
- 300 series stainless steel used on all external hardware
- Integral mounting bosses utilize threaded brass inserts accepting #10-32 screws for mounting optional panel
- Rounded edges reduce build-up of dust and debris
- Full 180° door opening
- Padlocking latches provide quick access and optional closure locking (padlock not included)
- Flush mounted scratch and abrasion resistant polycarbonate clear cover option provides internal component visibility

Discount Schedule: F2

Subclass: G00

Notes: We can provide special modifications. Consult the factory for your special requirements.

JIC Fiberglass Enclosures
Type 4X Premier™ Series Hinged Quick-Release Cover
Illustration Sheet and Catalog Number

Enclosure Catalog #	Overall Dimensions H x W x D		Inside Dimensions A x B x C		Mtg. Dimension P x R		Optional Feet Mtg. E x F		Panel No.
	in.	mm	in.	mm	in.	mm	in.	mm	
664-SDFQR	7.41 x 7.79 x 4.31	188 x 198 x 109	6.77 x 6.77 x 4.06	172 x 172 x 103	5.93 x 4.00	150 x 101	8.24 x 4.00	209 x 101	AW66__
864-SDFQR	9.41 x 7.79 x 4.31	239 x 198 x 109	8.77 x 6.77 x 4.06	228 x 172 x 103	7.91 x 4.00	201 x 101	10.21 x 4.00	259 x 101	AW86__
884-SDFQR	9.39 x 9.76 x 4.31	238 x 248 x 109	8.74 x 8.74 x 4.06	222 x 222 x 103	7.91 x 6.00	201 x 152	10.21 x 6.00	259 x 152	AW88__
1086-SDFQR	11.42 x 9.79 x 6.31	290 x 248 x 160	10.73 x 8.73 x 6.06	272 x 222 x 154	9.89 x 6.00	251 x 152	12.19 x 6.00	309 x 152	AW108__
12106-SDFQR	13.45 x 11.83 x 6.31	341 x 300 x 160	12.69 x 10.69 x 6.06	322 x 271 x 154	11.88 x 8.00	302 x 203	14.18 x 8.00	360 x 203	AW1210__
14126-SDFQR	15.49 x 13.86 x 6.34	393 x 352 x 161	14.72 x 12.72 x 6.06	374 x 323 x 154	13.91 x 10.00	353 x 254	16.21 x 10.00	412 x 254	AW1412__
14128-SDFQR	15.49 x 13.86 x 8.34	393 x 352 x 212	14.66 x 12.66 x 8.06	372 x 321 x 205	13.88 x 10.00	352 x 254	16.19 x 10.00	411 x 254	AW1412__
16148-SDFQR	17.58 x 15.96 x 8.34	446 x 405 x 212	16.69 x 14.69 x 8.06	424 x 373 x 205	15.96 x 12.00	405 x 205	18.26 x 12.00	464 x 305	AW1614__
181610-SDFQR	19.77 x 18.15 x 10.34	502 x 461 x 262	18.63 x 16.63 x 10.06	473x x 422 x 255	17.94 x 14.00	455 x 355	20.24 x 14.00	514 x 355	AW1816__
201610-SDFQR	21.79 x 18.16 x 10.34	553 x 461 x 262	20.63 x 16.63 x 10.06	524 x 422 x 255	19.96 x 14.00	507 x 355	22.26 x 14.00	565 x 355	AW2016__J

Enclosure Catalog #	Dimensions K		L		S		T		N		J		M	
	in.	mm	in.	mm	in.	mm	in.	mm	in.	mm	in.	mm	in.	mm
664-SDFQR	4.25	108	4.25	108	3.60	91	0.38	9.6	9.02	229	4.56	116	0.25	6.35
864-SDFQR	6.25	159	4.25	108	3.60	91	0.38	9.6	10.98	279	4.56	116	0.25	6.35
884-SDFQR	6.25	159	6.25	159	3.60	91	0.38	9.6	10.98	279	4.56	116	0.25	6.35
1086-SDFQR	8.25	210	6.25	159	5.60	142	0.38	9.6	12.96	329	6.56	167	0.25	6.35
12106-SDFQR	10.25	260	8.25	210	5.60	142	0.38	9.6	14.95	380	6.56	167	0.25	6.35
14126-SDFQR	12.25	311	10.25	260	5.60	142	0.38	9.6	16.98	431	6.59	167	0.25	6.35
14128-SDFQR	12.25	311	10.25	260	7.60	193	0.38	9.6	16.96	431	8.59	218	0.25	6.35
16148-SDFQR	14.25	362	12.25	311	7.60	193	0.38	9.6	19.04	483	8.59	218	0.25	6.35
181610-SDFQR	16.25	413	14.25	362	9.60	244	0.38	9.6	21.02	534	10.59	269	0.25	6.35
201610-SDFQR	18.25	463	14.25	362	9.59	244	0.38	9.6	23.04	585	10.59	269	0.25	6.35

Panel Finishes

Example: AW108__

Insert for __

P = Carbon Steel
SP = Stainless Steel
AP = Aluminum

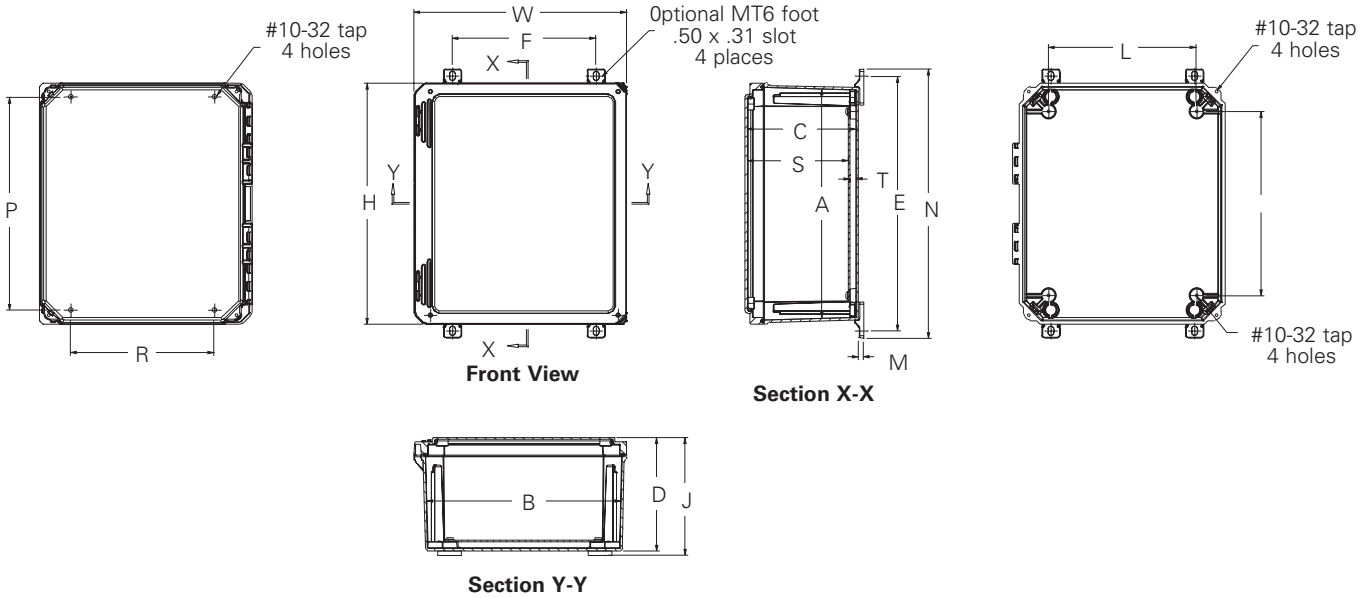

Notes: Dimensions are in inches. Millimeters shown are for reference only. Data subject to change without notice.

JIC Fiberglass Enclosures
Type 4X Premier™ Series Hinged Quick-Release Clear Cover
Data Sheet

Application
- Houses electrical and electronic controls and instruments
- Intended for indoor or outdoor use
- Ideally suited for harsh environments
- Protects against corrosion, windblown dust and rain, splashing water, and hose directed water

Standards
- UL/cUL 50 Listed, Type 1, Type 3, Type 3s, Type 4X, Type 12, Type 13
- Conforms to NEMA Standard for Type 1, Type 3, Type 3s, Type 4X, Type 12, Type 13
- Temperature Range: -40°F to 250°F (-40°C to 120°C)
- Flammability Rating: UL94-5V
- Window Flammability Rating: UL94V-0
- Self Extinguishing: Non-halogenated, Non-flame propagating
- Chemical Resistance: (see chart, pages 464 - 467)
- NFPA No. 101 Flame Spread, Class A (1)

Finish
- Gray color

Accessories
- Back Panels (see page 290)
- Mounting Foot kits (see page 294)
- See accessories (pages 292 - 294)

Construction
- Enclosures are an impact resistant, non-conductive, light-weight hot compression molded Non-Metallic reinforced polyester
- Poured polyurethane seamless gasket provides watertight, dust-tight environmental seal
- Captive screws provide smooth surfaces
- 300 series stainless steel used on all external hardware
- Integral mounting bosses utilize threaded brass inserts accepting #10-32 screws for mounting optional panel
- Rounded edges reduce build-up of dust and debris
- Full 180° door opening
- Padlocking latches provide quick access and optional closure locking (padlock not included)
- Flush mounted scratch and abrasion resistant polycarbonate clear cover option provides internal component visibility

Discount Schedule: F2

Subclass: G00

Notes: We can provide special modifications. Consult the factory for your special requirements.

JIC Fiberglass Enclosures
Type 4X Premier™ Series Hinged Quick-Release Clear Cover
Illustration Sheet and Catalog Number

Enclosure Catalog #	Overall Dimensions H x W x D		Inside Dimensions A x B x C		Mtg. Dimension P x R		Optional Feet Mtg. E x F		Panel No.
	in.	mm	in.	mm	in.	mm	in.	mm	
664-SDFQRCC	7.41 x 7.79 x 4.31	188 x 198 x 109	6.77 x 6.77 x 4.06	172 x 172 x 103	5.93 x 4.00	150 x 101	8.24 x 4.00	209 x 101	AW66__
864-SDFQRCC	9.41 x 7.79 x 4.31	239 x 198 x 109	8.77 x 6.77 x 4.06	228 x 172 x 103	7.91 x 4.00	201 x 101	10.21 x 4.00	259 x 101	AW86__
884-SDFQRCC	9.39 x 9.76 x 4.31	238 x 248 x 109	8.74 x 8.74 x 4.06	222 x 222 x 103	7.91 x 6.00	201 x 152	10.21 x 6.00	259 x 152	AW88__
1086-SDFQRCC	11.42 x 9.79 x 6.31	290 x 248 x 160	10.73 x 8.73 x 6.06	272 x 222 x 154	9.89 x 6.00	251 x 152	12.19 x 6.00	309 x 152	AW108__
12106-SDFQRCC	13.45 x 11.83 x 6.31	341 x 300 x 160	12.69 x 10.69 x 6.06	322 x 271 x 154	11.88 x 8.00	302 x 203	14.18 x 8.00	360 x 203	AW1210__
14126-SDFQRCC	15.49 x 13.86 x 6.34	393 x 352 x 161	14.72 x 12.72 x 6.06	374 x 323 x 154	13.91 x 10.00	353 x 254	16.21 x 10.00	412 x 254	AW1412__
14128-SDFQRCC	15.49 x 13.86 x 8.34	393 x 352 x 212	14.66 x 12.66 x 8.06	372 x 321 x 205	13.88 x 10.00	352 x 254	16.19 x 10.00	411 x 254	AW1412__
16148-SDFQRCC	17.58 x 15.96 x 8.34	446 x 405 x 212	16.69 x 14.69 x 8.06	424 x 373 x 205	15.96 x 12.00	405 x 205	18.26 x 12.00	464 x 305	AW1614__

Enclosure Catalog #	Dimensions K		L		S		T		N		J		M	
	in.	mm	in.	mm	in.	mm	in.	mm	in.	mm	in.	mm	in.	mm
664-SDFQRCC	4.25	108	4.25	108	3.60	91	0.38	9.6	9.02	229	4.56	116	0.25	6.35
864-SDFQRCC	6.25	159	4.25	108	3.60	91	0.38	9.6	10.98	279	4.56	116	0.25	6.35
884-SDFQRCC	6.25	159	6.25	159	3.60	91	0.38	9.6	10.98	279	4.56	116	0.25	6.35
1086-SDFQRCC	8.25	210	6.25	159	5.60	142	0.38	9.6	12.96	329	6.56	167	0.25	6.35
12106-SDFQRCC	10.25	260	8.25	210	5.60	142	0.38	9.6	14.95	380	6.56	167	0.25	6.35
14126-SDFQRCC	12.25	311	10.25	260	5.60	142	0.38	9.6	16.98	431	6.59	167	0.25	6.35
14128-SDFQRCC	12.25	311	10.25	260	7.60	193	0.38	9.6	16.96	431	8.59	218	0.25	6.35
16148-SDFQRCC	14.25	362	12.25	311	7.60	193	0.38	9.6	19.04	483	8.59	218	0.25	6.35

Panel Finishes

Example: AW108__

Insert for __

P = Carbon Steel
SP = Stainless Steel
AP = Aluminum

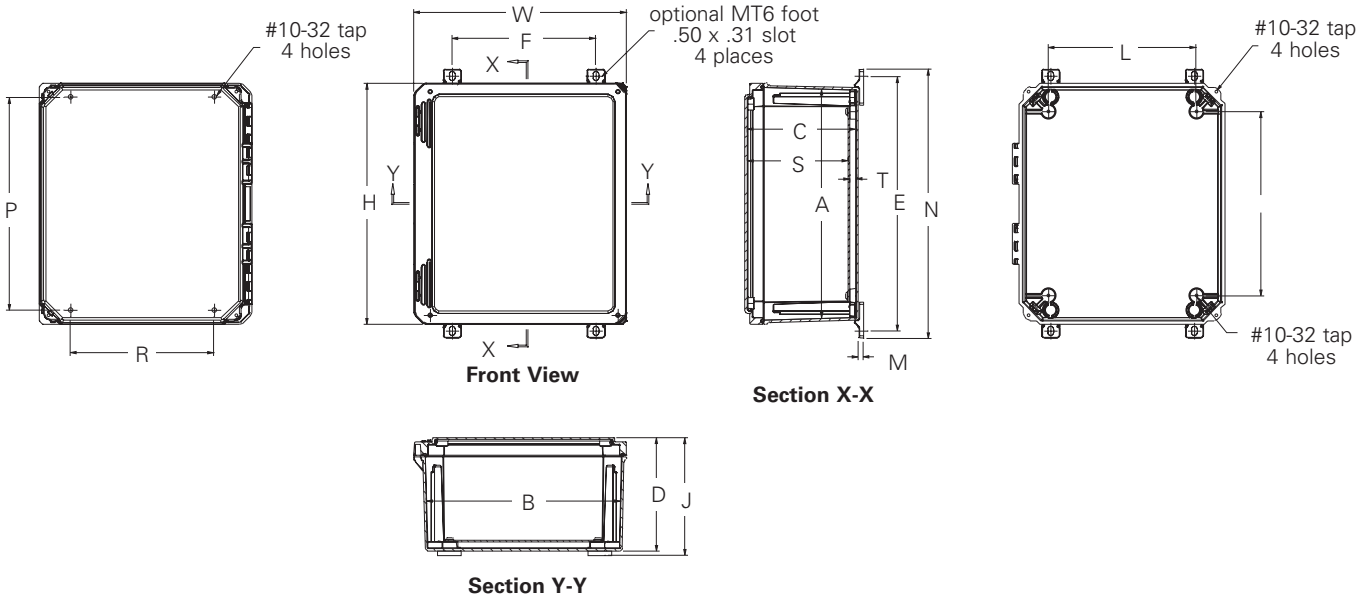

Notes: Dimensions are in inches. Millimeters shown are for reference only. Data subject to change without notice.

JIC Fiberglass Enclosures
Type 4X Small Junction
Data Sheet

Application
- Houses electrical and electronic controls and instruments
- Intended for indoor or outdoor use
- Ideally suited for harsh environments
- Protects against corrosion, windblown dust and rain, splashing water, hose directed water, and prolonged submersion

Standards
- UL/cUL 50 Listed, Type 1, Type 3R, Type 4X, Type 6P, Type 12
- Conforms to NEMA Standard for Type 1, Type 3R, Type 4X, Type 6P, Type 12
- Temperature Range: -40°F to 250°F (-40°C to 120°C)
- Flammability Rating: UL94-5V
- Self Extinguishing: Non-flame propagating
- Chemical Resistance: (see chart, pages 464 - 467)

Finish
- Gray color

Accessories
- Mounting Foot kits (see page 294)
- See accessories (pages 292 - 294)

Construction
- Enclosures are an impact resistant, non-conductive, light-weight hot compression molded Non-Metallic reinforced polyester
- Poured polyurethane seamless gasket provides watertight, dust-tight environmental seal
- Recessed captive screws provide smooth surfaces
- 300 series stainless steel used on all external hardware
- Rounded edges reduce build-up of dust and debris

Discount Schedule: F2

Subclass: G00

Notes: We can provide special modifications. Consult the factory for your special requirements.

JIC Fiberglass Enclosures
Type 4X Small Junction
Illustration Sheet and Catalog Number

Enclosure Catalog #	Overall Dimensions H x W x D		Inside Dimensions A x B x C		Dimensions I		J		K		L		M		N	
	in.	mm	in.	mm	in.	mm	in.	mm	in.	mm	in.	mm	in.	mm	in.	mm
332-4XFSC	3.72 x 3.63 x 2.95	95 x 92 x 75	3.13 x 3.03 x 2.70	79 x 77 x 69	3.22	82	2.12	54	2.31	59	2.75	70	1.59	40	2.03	52
532-4XFSC	5.97 x 3.63 x 3.14	152 x 92 x 80	5.38 x 3.03 x 2.87	137 x 77 x 73	5.72	120	2.38	61	4.56	116	2.75	70	3.84	98	2.03	52
644-4XFSC	6.63 x 3.81 x 3.89	168 x 97 x 99	6.00 x 3.19 x 3.63	153 x 81 x 92	5.31	135	2.50	64	4.88	124	2.94	75	4.13	105	2.19	56
832-4XFSC	8.41 x 3.63 x 3.14	214 x 92 x 80	7.82 x 3.03 x 2.87	199 x 77 x 73	7.16	182	2.38	60	7.00	178	2.75	70	6.28	160	2.03	52
844-4XFSC	8.41 x 3.63 x 3.14	225 x 97 x 99	8.26 x 3.19 x 3.63	210 x 81 x 92	7.56	192	2.50	64	7.13	181	2.94	75	6.38	162	2.19	56
932-4XFSC	9.35 x 3.63 x 3.14	237 x 92 x 80	8.75 x 3.03 x 2.87	222 x 77 x 73	8.10	206	2.38	60	7.94	202	2.75	70	7.22	183	2.03	52
1144-4XFSC	11.13 x 3.81 x 3.89	283 x 97 x 99	10.51 x 3.19 x 3.63	267 x 81 x 92	9.81	249	2.50	64	9.37	238	2.94	75	8.63	219	2.19	56
1432-4XFSC	13.78 x 3.63 x 3.14	350 x 92 x 80	13.19 x 3.03 x 2.87	335 x 77 x 73	12.53	318	2.38	60	12.37	314	2.75	70	11.66	296	2.03	52
1732-4XFSC	17.35 x 3.63 x 3.14	441 x 92 x 80	16.75 x 3.03 x 2.87	426 x 77 x 73	16.10	409	2.38	60	15.94	405	2.75	70	15.22	387	2.03	52

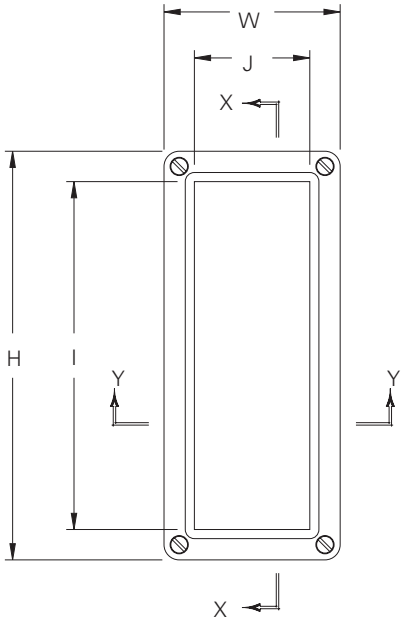

Front View

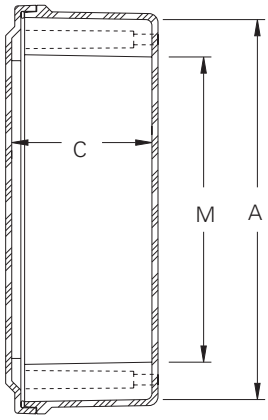

Section X-X

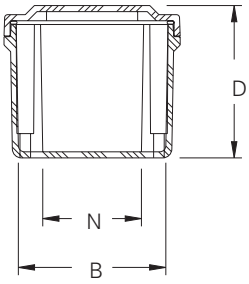

Section Y-Y

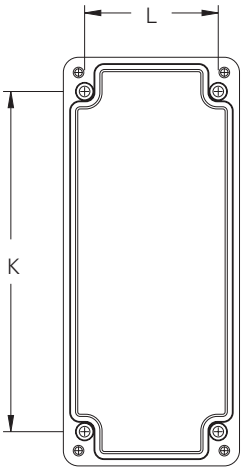

Front View Without Cover

Notes: Dimensions are in inches. Millimeters shown are for reference only. Data subject to change without notice.

JIC Fiberglass Enclosures
Type 4X Small Junction
Data Sheet

Application
- Houses electrical and electronic controls and instruments
- Intended for indoor or outdoor use
- Ideally suited for harsh environments
- Protects against corrosion, windblown dust and rain, splashing water, hose directed water, and prolonged submersion

Standards
- UL/cUL 50 Listed, Type 1, Type 3R, Type 4X, Type 6P, Type 12
- Conforms to NEMA Standard for Type 1, Type 3R, Type 4X, Type 6P, Type 12
- Temperature Range: -40°F to 250°F (-40°C to 120°C)
- Flammability Rating: UL94-5V
- Self Extinguishing: Non-flame propagating
- Chemical Resistance: (see chart, pages 464 - 467)

Finish
- Gray color

Accessories
- Back Panels (see page 290)
- Mounting Foot kits (see page 294)
- See accessories (pages 292 - 294)

Construction
- Enclosures are an impact resistant, non-conductive, light-weight hot compression molded Non-Metallic reinforced polyester
- Poured polyurethane seamless gasket provides watertight, dust-tight environmental seal
- Captive screws provide smooth surfaces
- 300 series stainless steel used on all external hardware
- Integral mounting bosses utilize threaded brass inserts accepting #10-32 screws for mounting optional panel
- Rounded edges reduce build-up of dust and debris

Discount Schedule: F2

Subclass: G00

Notes: We can provide special modifications. Consult the factory for your special requirements.

JIC Fiberglass Enclosures
Type 4X Small Junction
Illustration Sheet and Catalog Number

Enclosure Catalog #	Overall Dimensions H x W x D		Inside Dimensions A x B x C		Dimensions E		F		J		K		Panel No.
	in.	mm	in.	mm	in.	mm	in.	mm	in.	mm	in.	mm	
763-4XFSC	7.63 x 6.63 x 3.19	194 x 168 x 81	6.90 x 5.90 x 2.88	175x150x73	5.37	137	5.63	143	2.48	63	5.37	137	AW76__
963-4XFSC	9.87 x 6.63 x 3.19	251 x 168 x 81	9.15 x 5.90 x 2.88	232x150x73	7.62	194	5.63	143	2.48	63	7.62	194	AW96__

Enclosure Catalog #	Dimensions L		M		N	
	in.	mm	in.	mm	in.	mm
763-4XFSC	4.25	108	4.52	115	4.90	124
963-4XFSC	4.25	108	6.77	172	4.90	124

Panel Finishes

Example: AW108__

Insert for __

P = Carbon Steel
SP = Stainless Steel
AP = Aluminum

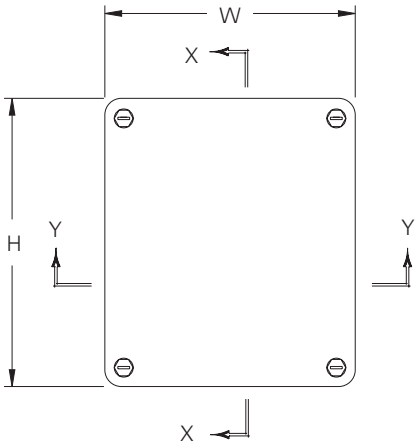

Front View

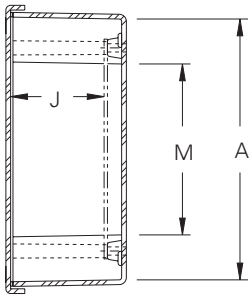

Section X-X

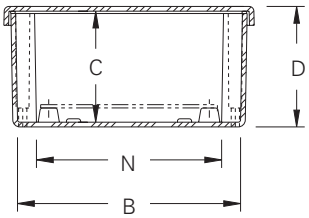

Section Y-Y

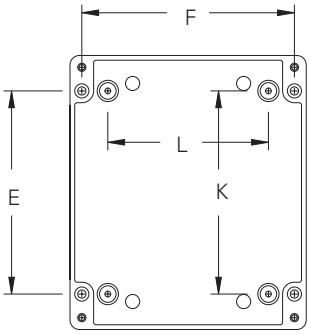

Front View Without Cover

Notes: Dimensions are in inches. Millimeters shown are for reference only. Data subject to change without notice.

Fiberglass Wall-Mount Enclosures
Type 3R Continuous Hinge Cover
Data Sheet

Application
- Houses electrical, electronic, instrument, and mechanical controls
- Intended for indoor or outdoor use
- Ideally suited for harsh environments
- Protects against corrosion, falling rain, sleet, and external ice formation

Standards
- UL/cUL 50 Listed, Type 1, Type 3, Type 3R
- Conforms to NEMA Standard for Type 1, Type 3, Type 3R
- Temperature Range: -40°F to 250°F (-40°C to 120°C)
- Flammability Rating: UL94-5V
- Self Extinguishing: Non-flame propagating
- Chemical Resistance: (see chart, pages 464 - 467)

Finish
- Gray color

Accessories
- Back Panels (pages 290 - 291)
- See accessories (pages 292 - 294)

Construction
- Enclosures are an impact resistant, non-conductive, light-weight hot compression molded Non-Metallic reinforced polyester
- Poured polyurethane seamless gasket provides watertight, dust-tight environmental seal
- Rain shield to protect against incidental water ingress
- Twist lock latches provide ease of entry into enclosure
- 300 series stainless steel used on all external hardware
- Integral mounting feet molded in place for ease of mounting
- Integral mounting bosses utilize threaded brass inserts accepting #10-32 screws for mounting optional panel
- Rounded edges reduce build-up of dust and debris
- Full length stainless steel hinged cover
- Built in padlock hasp provide optional secure closure locking (padlock not included)

Discount Schedule: F2

Subclass: G00

Notes: We can provide special modifications. Consult the factory for your special requirements.

Fiberglass Wall-Mount Enclosures
Type 3R Continuous Hinge Cover
Illustration Sheet and Catalog Number

Enclosure Catalog #	Overall Dimensions H x W x D		Inside Dimensions A x B x C		Dimensions E		F		J		K		L		M		N		Panel Number
	in.	mm	in.	mm	in.	mm	in.	mm	in.	mm	in.	mm	in.	mm	in.	mm	in.	mm	
242410-RHCF	27.00 x 25.24 x 11.90	686 x 641 x 302	24.05 x 24.39 x 11.25	611 x 619 x 286	25.75	654	17.87	454	10.25	260	19.25	489	19.25	489	21.25	540	20.00	508	AWF2424__
30208-RHCF	32.86 x 20.99 x 9.89	835 x 533 x 251	29.90 x 20.14 x 9.23	760 x 511 x 234	31.75	806	14.25	362	8.23	209	25.25	641	15.25	387	27.00	686	16.50	419	AWF3020__
302010-RHCF	32.86 x 20.99 x 11.89	835 x 533 x 302	29.90 x 20.14 x 11.23	760 x 511 x 285	31.75	806	14.25	362	10.23	260	25.25	641	15.25	387	27.00	686	16.50	419	AWF3020__
302410-RHCF	33.41 x 26.32 x 11.95	849 x 668 x 304	30.46 x 25.47 x 11.27	774 x 647 x 286	32.25	819	18.50	470	10.27	261	25.25	641	19.25	489	27.38	695	21.25	540	AWF3024__
302412-RHCF	33.41 x 26.32 x 13.79	849 x 668 x 350	30.46 x 25.47 x 13.10	774 x 647 x 333	32.25	819	18.50	470	12.10	307	25.25	641	19.25	489	27.38	695	21.25	540	AWF3024__
36308-RHCF	39.31 x 32.50 x 10.05	999 x 826 x 255	36.31 x 31.69 x 9.36	922 x 805 x 238	38.13	968	23.88	606	8.36	212	31.25	794	25.25	641	33.25	845	27.25	692	AWF3630__
363010-RHCF	39.31 x 32.50 x 12.05	999 x 826 x 306	36.31 x 31.69 x 11.36	922 x 805 x 289	38.13	968	23.88	606	10.36	263	31.25	794	25.25	641	33.25	845	27.25	692	AWF3630__
363012-RHCF	39.31 x 32.50 x 14.05	999 x 826 x 357	36.31 x 31.69 x 13.36	922 x 805 x 339	38.13	968	23.88	606	12.36	314	31.25	794	25.25	641	33.25	845	27.25	692	AWF3630__
483612-RHCF	51.29 x 36.62 x 14.43	1303 x 930 x 367	48.33 x 36.22 x 13.25	1228 x 920 x 336	50.12	1273	29.25	743	12.25	311	43.25	1099	31.25	794	45.25	1149	32.00	813	AWF4836__
483616-RHCF	51.29 x 36.62 x 18.43	1303 x 930 x 468	48.33 x 36.22 x 17.25	1228 x 920 x 438	50.12	1273	29.25	743	16.25	413	43.25	1099	31.25	794	45.25	1149	32.00	813	AWF4836__

Panel Finishes

Example: AW108__

Insert for __

P = Carbon Steel
SP = Stainless Steel
AP = Aluminum

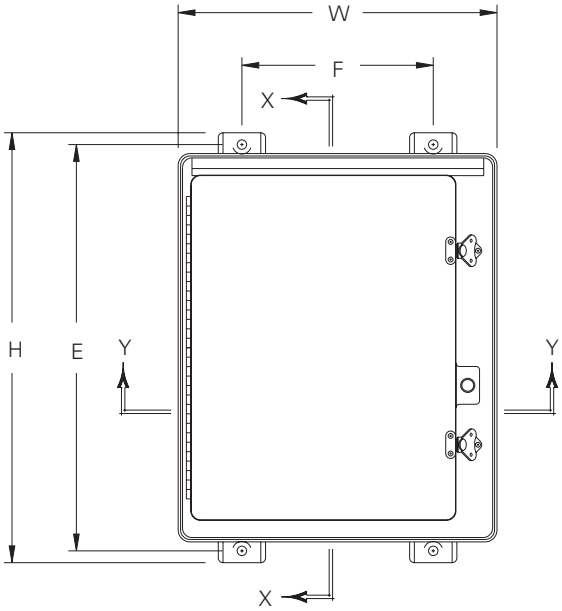

Front View

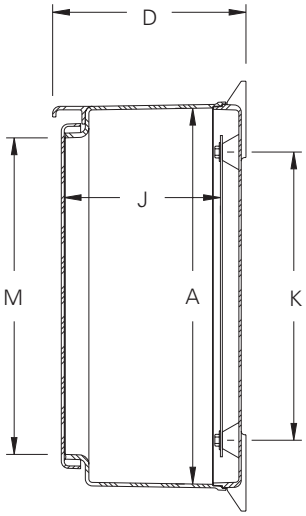

Section X-X

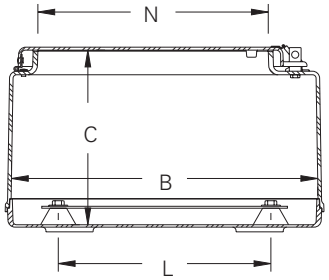

Section Y-Y

Notes: Dimensions are in inches. Millimeters shown are for reference only. Data subject to change without notice.

Fiberglass Wall-Mount Enclosures
Type 4X Single Door
Data Sheet

Application
- Houses electrical, electronic, instrument, and mechanical controls
- Intended for indoor or outdoor use
- Ideally suited for harsh environments
- Protects against corrosion, windblown dust and rain, splashing water, and hose directed water

Standards
- UL/cUL 50 Listed, Type 1, Type 3, Type 3R, Type 4X, Type 12
- Conforms to NEMA Standard for Type 1, Type 3, Type 3R, Type 4X, Type 12
- Temperature Range: -40°F to 250°F (-40°C to 120°C)
- Flammability Rating: UL94-5V
- Self Extinguishing: Non-flame propagating
- Chemical Resistance: (see chart, pages 464 - 467)

Finish
- Gray color

Accessories
- Back Panels (pages 290 - 291)
- See accessories (pages 292 - 294)

Construction
- Enclosures are an impact resistant, non-conductive, light-weight hot compression molded Non-Metallic reinforced polyester
- Poured polyurethane seamless gasket provides watertight, dust-tight environmental seal
- Twist lock latches provide ease of entry into enclosure
- 300 series stainless steel used on all external hardware
- Integral mounting feet molded in place for ease of mounting
- Integral mounting bosses utilize threaded brass inserts accepting #10-32 screws for mounting optional panel
- Rounded edges reduce build-up of dust and debris
- Full length stainless steel hinged cover
- Built in padlock hasp provide optional secure closure locking (padlock not included)

Discount Schedule: F2

Subclass: G00

Notes: We can provide special modifications. Consult the factory for your special requirements.

Fiberglass Wall-Mount Enclosures
Type 4X Single-Door
Illustration Sheet and Catalog Number

Enclosure Catalog #	Overall Dimensions H x W x D		Inside Dimensions A x B x C		Dimensions E		F		J		K		L		M		N		Panel Number
	in.	mm	in.	mm	in.	mm	in.	mm	in.	mm	in.	mm	in.	mm	in.	mm	in.	mm	
201612-4XF	22.75 x 16.87 x 13.77	578 x 429 x 350	19.70 x 16.04 x 13.24	500 x 407 x 336	21.50	546	10.12	257	12.26	312	15.25	387	11.25	286	16.75	425	12.19	310	AW2016__
24126-4XF	26.95 x 13.72 x 7.98	685 x 348 x 203	24.00 x 12.87 x 7.33	610 x 327 x 186	25.75	654	6.25	159	6.33	161	19.25	489	7.25	184	21.00	533	8.37	213	AW2412__
241210-4XF	26.95 x 13.72 x 11.99	685 x 348 x 304	24.00 x 12.87 x 11.33	610 x 327 x 288	25.75	654	6.25	159	10.33	262	19.25	489	7.25	184	21.00	533	8.37	213	AW2412__
24208-4XF	27.00 x 21.24 x 9.90	686 x 539 x 252	24.05 x 20.39 x 9.25	611 x 518 x 235	25.75	654	14.00	356	8.25	209	19.25	489	15.25	387	21.25	540	16.00	406	AWF2420__
242410-4XF	27.00 x 25.24 x 11.90	686 x 641 x 302	24.05 x 24.39 x 11.25	611 x 619 x 286	25.75	654	17.87	454	10.25	260	19.25	489	19.25	489	21.25	540	20.00	508	AWF2424__
242412-4XF	27.00 x 25.24 x 13.90	686 x 641 x 353	24.05 x 24.39 x 13.25	611 x 619 x 336	25.75	654	17.87	454	12.25	311	19.25	489	19.25	489	21.25	540	20.00	508	AWF2424__
30206-4XF	32.86 x 20.99 x 7.89	835 x 533 x2 00	29.90 x 20.14 x 7.23	760 x 511 x 184	31.75	806	14.25	362	6.23	158	25.25	641	15.25	387	27.00	686	16.50	419	AWF3020__
30208-4XF	32.86 x 20.99 x 9.89	835 x 533 x 251	29.90 x 20.14 x 9.23	760 x 511 x 234	31.75	806	14.25	362	8.23	209	25.25	641	15.25	387	27.00	686	16.50	419	AWF3020__
302010-4XF	32.86 x 20.99 x 11.89	835 x 533 x 302	29.90 x 20.14 x 11.23	760 x 511 x 285	31.75	806	14.25	362	10.23	260	25.25	641	15.25	387	27.00	686	16.50	419	AWF3020__
302012-4XF	32.86 x 20.99 x 13.89	835 x 533x 353	29.90 x 20.14 x 13.23	760 x 511 x 336	31.75	806	14.25	362	12.23	311	25.25	641	15.25	387	27.00	686	16.50	419	AWF3020__
30248-4XF	33.41 x 26.32 x 8.81	849 x 668x 224	30.46 x 25.47 x 8.12	774 x 647 x 206	32.25	819	18.50	470	7.12	181	25.25	641	19.25	489	27.38	695	21.25	540	AWF3024__
302410-4XF	33.41 x 26.32 x 11.95	849 x 668 x 304	30.46 x 25.47 x 11.27	774 x 647 x 286	32.25	819	18.50	470	10.27	261	25.25	641	19.25	489	27.38	695	21.25	540	AWF3024__
302412-4XF	33.41 x 26.32 x 13.79	849 x 668 x 350	30.46 x 25.47 x 13.10	774 x 647 x 333	32.25	819	18.50	470	12.10	307	25.25	641	19.25	489	27.38	695	21.25	540	AWF3024__
36308-4XF	39.31 x 32.50 x 10.05	999 x 826 x 255	36.31 x 31.69 x 9.36	922 x 805 x 238	38.13	968	23.88	606	8.36	212	31.25	794	25.25	641	33.25	845	27.25	692	AWF3630__
363010-4XF	39.31 x 32.50 x 12.05	999 x 826 x 306	36.31 x 31.69 x 11.36	922 x 805 x 289	38.13	968	23.88	606	10.36	263	31.25	794	25.25	641	33.25	845	27.25	692	AWF3630__
363012-4XF	39.31 x 32.50 x 14.05	999 x 826 x 357	36.31 x 31.69 x 13.36	922 x 805 x 339	38.13	968	23.88	606	12.36	314	31.25	794	25.25	641	33.25	845	27.25	692	AWF3630__
483612-4XF	51.29 x 36,62 x 13.79	1303 x 930 x 350	48.33 x 36.22 x 13.25	1228 x 920 x 336	50.12	1273	28.50	724	12.25	311	21.63	549	31.25	794	45.25	1149	32.00	813	AWF4836__
483616-4XF	51.29 x 36,62 x 17.79	1303 x 930 x 452	48.33 x 36.22 x 17.25	1228 x 920 x 438	50.12	1273	28.50	724	16.25	413	21.63	549	31.25	794	45.25	1149	32.00	813	AWF4836__
603612-4XF	64.00 x 36.50 x 14.12	1627 x 927x359	60.62 x 36.13 x 13.44	1540 x 918 x 341	62.75	1594	28.75	730	12.44	316	27.63	702	31.25	794	57.25	1454	32.00	813	AWF6036__
603616-4XF	64.00 x 36.50 x 18.12	1627 x 927x460	60.62 x 36.13 x 17.44	1540 x 918 x 442	62.75	1594	28.75	730	16.44	418	27.63	702	31.25	794	57.25	1454	32.00	813	AWF6036__

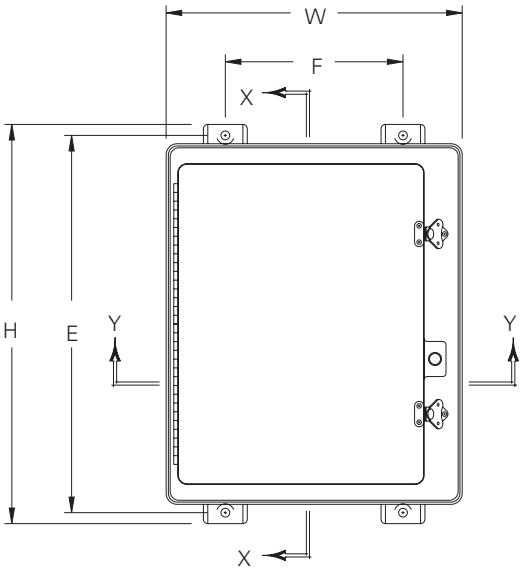

Front View

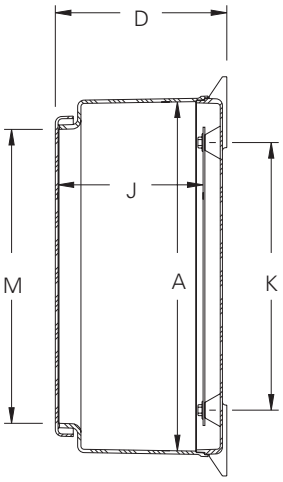

Section X-X

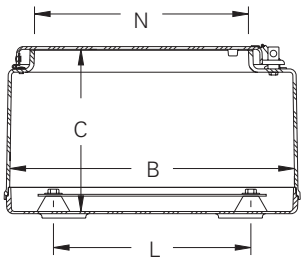

Section Y-Y

Panel Finishes

Example: AW108__

Insert for __

P = Carbon Steel
SP = Stainless Steel
AP = Aluminum

Notes: Dimensions are in inches. Millimeters shown are for reference only. Data subject to change without notice.

Fiberglass Wall-Mount Enclosures
Type 4X Double-Door
Data Sheet

Application
- Houses electrical, electronic, instrument, and mechanical controls
- Intended for indoor or outdoor use
- Ideally suited for harsh environments
- Protects against corrosion, windblown dust and rain, splashing water, and hose directed water

Standards
- UL/cUL 50 Listed, Type 1, Type 3, Type 3R, Type 4X, Type 12
- Conforms to NEMA Standard for Type 1, Type 3, Type 3R, Type 4X, Type 12
- Temperature Range: -40°F to 250°F (-40°C to 120°C)
- Flammability Rating: UL94-5V
- Self Extinguishing: Non-flame propagating
- Chemical Resistance: (see chart, pages 464 - 467)

Finish
- Gray color

Accessories
- Back Panels (pages 290 - 291)
- See accessories (pages 292 - 294)

Construction
- Enclosures are an impact resistant, non-conductive, light-weight hot compression molded Non-Metallic reinforced polyester
- Poured polyurethane seamless gasket provides watertight, dust-tight environmental seal
- Twist lock latches provide ease of entry into enclosure
- 300 series stainless steel used on all external hardware
- Integral mounting feet molded in place for ease of mounting
- Integral mounting bosses utilize threaded brass inserts accepting #10-32 screws for mounting optional panel
- Rounded edges reduce build-up of dust and debris
- Full length stainless steel hinged cover
- Built in padlock hasp provide optional secure closure locking (padlock not included)

Discount Schedule: F2

Subclass: G00

Notes: We can provide special modifications. Consult the factory for your special requirements.

Fiberglass Wall-Mount Enclosures
Type 4X Double-Door
Illustration Sheet and Data Sheet

Enclosure Catalog #	Overall Dimensions H x W x D in.	Overall Dimensions H x W x D mm	Inside Dimensions A x B x C in.	Inside Dimensions A x B x C mm	Dimensions E in.	E mm	F in.	F mm	J in.	J mm	K in.	K mm	L in.	L mm	M in.	M mm	N in.	N mm	Panel Number
364812-4XFD	39.50 x 48.50 x 13.62	1003 x 1232 x 346	36.12 x 48.12 x 13.00	917 x 1222 x 330	38.25	972	40.50	1029	11.94	303	14.50	368	20.00	508	32.00	813	20.75	527	*

*** When ordering steel, stainless steel, or aluminum panels (AWF3622__), the part number includes only one (1) panel - two (2) may be required**

Panel Finishes

Example: AW108__

Insert for __

P = Carbon Steel
SP = Stainless Steel
AP = Aluminum

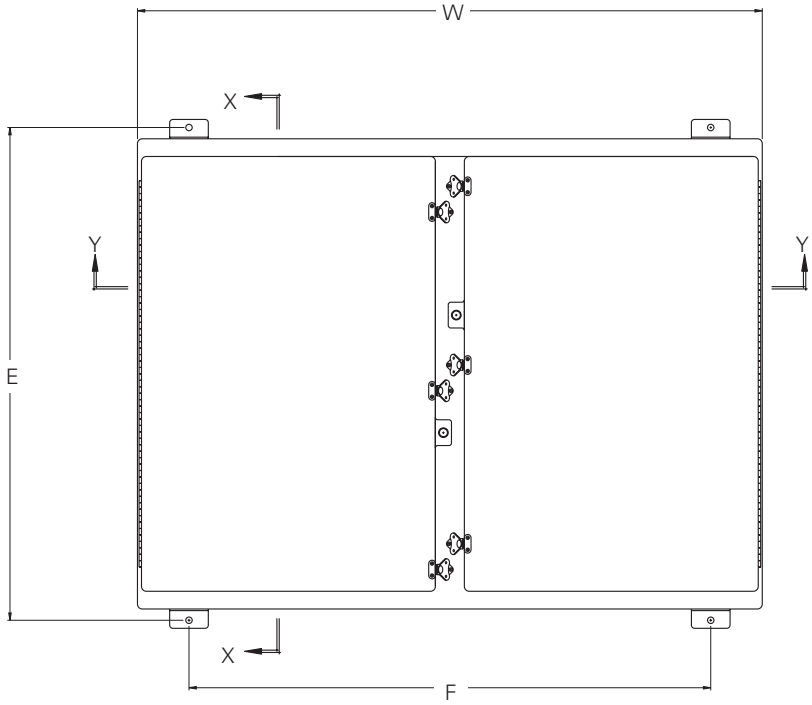

Front View

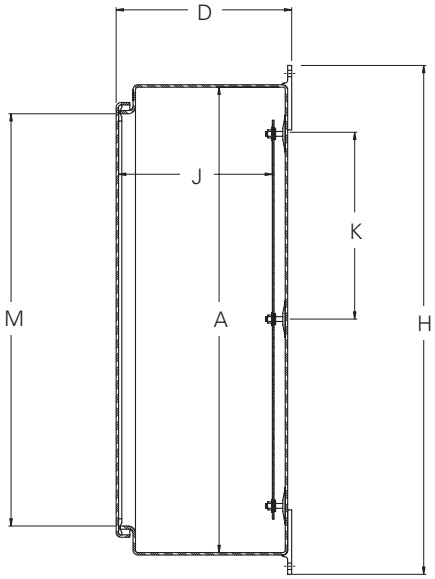

Section X-X

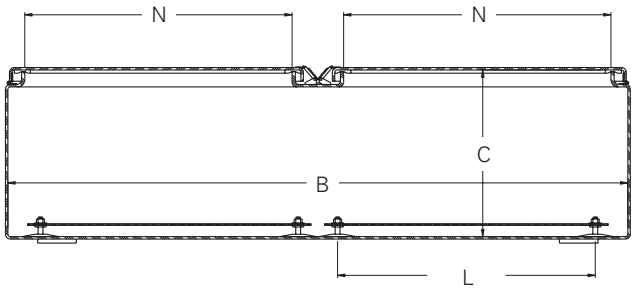

Section Y-Y

Notes: Dimensions are in inches. Millimeters shown are for reference only. Data subject to change without notice.

Fiberglass Ground-Mount Enclosures
Type 4X Free-Standing Single-Door
Data Sheet

Application
- Houses electrical, electronic, instrument, and mechanical controls
- Intended for indoor or outdoor use
- Ideally suited for harsh environments
- Protects against corrosion, windblown dust and rain, splashing water, and hose directed water

Standards
- UL/cUL 50 Listed, Type 1, Type 3, Type 3R, Type 4X, Type 12
- Conforms to NEMA Standard for Type 1, Type 3, Type 3R, Type 4X, Type 12
- Temperature Range: -40°F to 250°F (040°C to 120°C)
- Flammability Rating: UL94-5V
- Self Extinguishing: Non-flame propagating
- Chemical Resistance: (see chart, pages 464 - 467)

Finish
- Gray color

Accessories
- Back Panels (pages 290 - 291)
- See accessories (pages 292 - 294)

Construction
- Enclosures are an impact resistant, non-conductive, light-weight hot compression molded Non-Metallic reinforced polyester
- Poured polyurethane seamless gasket provides watertight, dust-tight environmental seal
- Twist lock latches provide ease of entry into enclosure
- 300 series stainless steel used on all external hardware
- Integral mounting bosses utilize threaded brass inserts for mounting optional panel
- Rounded edges reduce build-up of dust and debris
- Full length stainless steel hinged cover
- Built in padlock hasp provide optional secure closure locking (padlock not included)

Discount Schedule: F2

Subclass: G00

Notes: We can provide special modifications. Consult the factory for your special requirements.

Fiberglass Ground-Mount Enclosures
Type 4X Free-Standing Single-Door
Illustration Sheet and Catalog Number

Enclosure Catalog #	Overall Dimensions H x W x D in.	mm	Inside Dimensions A x B x C in.	mm	Dimensions J in.	mm	K in.	mm	L in.	mm	Enclosure Opening M in.	mm	N in.	mm	Panel Number
723618-4XFFS	72.5 x 36.5 x 19.38	1841 x 927 x 492	72.0 x 36.0 x 18.88	1829 x 914 x 479	17.88	454	15.50	388	30.00	762	64.75	1645	32.00	813	AWF7236__
723624-4XFFS	72.5 x 36.5 x 25.38	1841 x 927 x 644	72.0 x 36.0 x 24.88	1829 x 914 x 631	23.88	606	15.50	388	30.00	762	64.75	1645	32.00	813	AWF7236__
903636-4XFFS	90.5 x 36.5 x 37.88	2299 x 927 x 949	90.0 x 36.0 x 37.38	2286 x 914 x 949	36.25	921	20.00	508	30.00	762	82.75	2102	32.00	813	AWF9036__

Panel Finishes

Example: AW108__

Insert for __

P = Carbon Steel
SP = Stainless Steel
AP = Aluminum

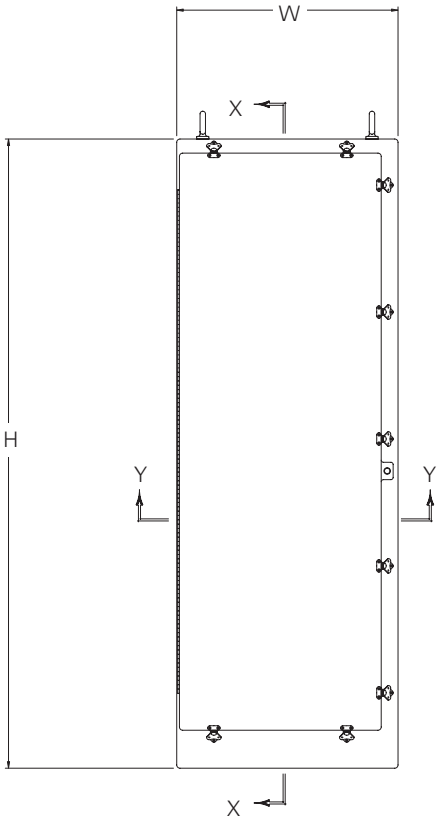

Front View

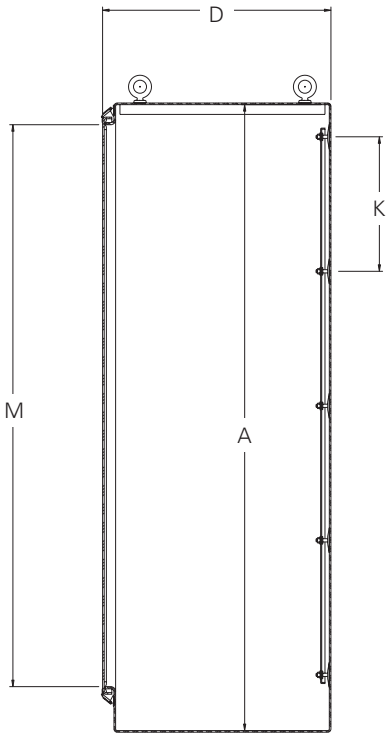

Section X-X

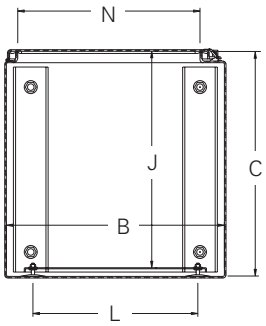

Section Y-Y

Notes: Dimensions are in inches. Millimeters shown are for reference only. Data subject to change without notice.

Fiberglass Ground-Mount Enclosures
Type 4X Free-Standing Double-Door
Data Sheet

Application
- Houses electrical, electronic, instrument, and mechanical controls
- Intended for indoor or outdoor use
- Ideally suited for harsh environments
- Protects against corrosion, windblown dust and rain, splashing water, and hose directed water

Standards
- UL/cUL 50 Listed, Type 1, Type 3, Type 3R, Type 4X, Type 12
- Conforms to NEMA Standard for Type 1, Type 3, Type 3R, Type 4X, Type 12
- Temperature Range: -40°F to 250°F (040°C to 120°C)
- Flammability Rating: UL94-5V
- Self Extinguishing: Non-flame propagating
- Chemical Resistance: (see chart, pages 464 - 467)

Finish
- Gray color

Accessories
- Back Panels (pages 290 - 291)
- See accessories (pages 292 - 294)

Construction
- Enclosures are an impact resistant, non-conductive, light-weight hot compression molded Non-Metallic reinforced polyester
- Poured polyurethane seamless gasket provides watertight, dust-tight environmental seal
- Twist lock latches provide ease of entry into enclosure
- 300 series stainless steel used on all external hardware
- Integral mounting bosses utilize threaded brass inserts for mounting optional panel
- Rounded edges reduce build-up of dust and debris
- Full length stainless steel hinged cover
- Built in padlock hasp provide optional secure closure locking (padlock not included)

Discount Schedule: F2

Subclass: G00

Notes: We can provide special modifications. Consult the factory for your special requirements.

Fiberglass Ground-Mount Enclosures
Type 4X Free-Standing Double-Door
Illustration Sheet and Catalog Number

Enclosure Catalog #	Overall Dimensions H x W x D in.	Overall Dimensions H x W x D mm	Inside Dimensions A x B x C in.	Inside Dimensions A x B x C mm	Dimensions J in.	J mm	K in.	K mm	L in.	L mm	Enclosure Opening M in.	M mm	Enclosure Opening N in.	N mm	Panel Number
724818-4XFFSD	72.5 x 58.5 x 19.38	1841 x 1232 x 492	72.0 x 48.0 x 18.88	1829 x 1219 x 476	17.88	454	15.50	388	19.50	495	64.75	1645	20.50	521	*AWF7221
727218-4XFFSD	72.5 x 72.5 x 19.38	1841 x 1842 x 492	72.0 x 72.0 x 18.88	1829 x 1829 x 479	17.88	454	15.50	388	31.50	800	64.75	1645	32.50	826	*AWF7233

* **When ordering panels, the part number includes only one (1) panel - two (2) are required**

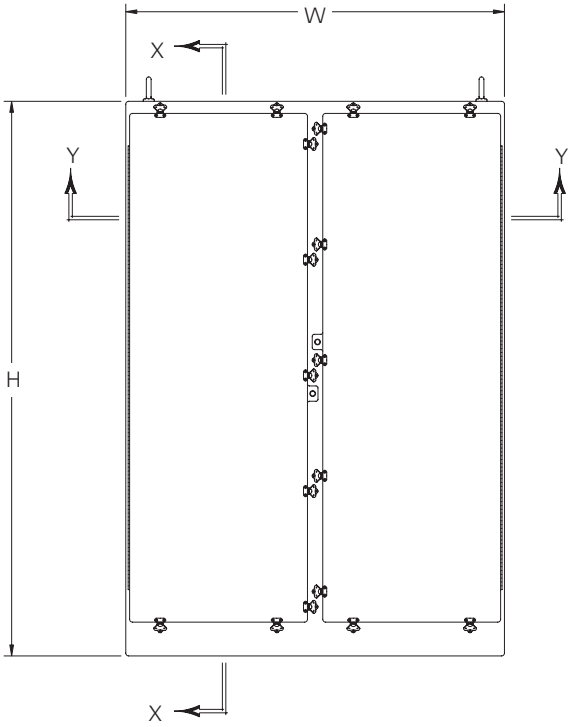

Front View

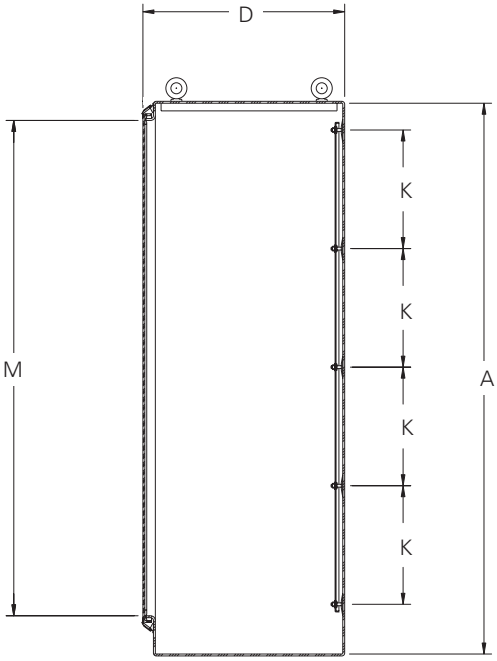

Section X-X

Panel Finishes

Example: AW108__

Insert for __

P = Carbon Steel
SP = Stainless Steel
AP = Aluminum

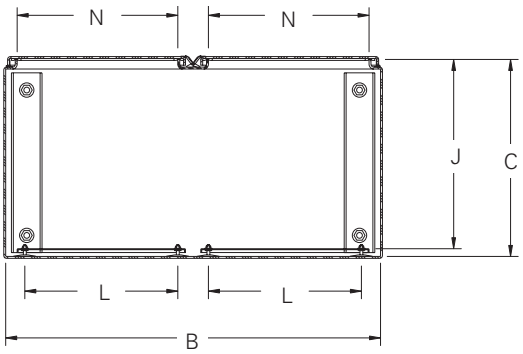

Section Y-Y

Notes: Dimensions are in inches. Millimeters shown are for reference only. Data subject to change without notice.

Fiberglass Pushbutton Enclosures
Type 4X In-Line 30 mm
Data Sheet

Application
- Designed to mount standard oil-tight pushbuttons, pilot lights, and switches
- Intended for indoor or outdoor use
- Ideally suited for harsh environments
- Protects against corrosion, windblown dust and rain, splashing water, hose directed water, and prolonged submersion

Standards
- UL/cUL 50 Listed, Type 1, Type 3, Type 4X, Type 6P, Type 12
- Conforms to NEMA Standard for Type 1, Type 3, Type 4X, Type 6P, Type 12
- Temperature Range: -40°F to 250°F (-40°C to 120°C)
- Flammability Rating: UL94-5V
- Self Extinguishing: Non-flame propagating
- Chemical Resistance: (see chart, pages 464 - 467)

Finish
- Gray color

Accessories
- See accessories (pages 292 - 294)

Construction
- Enclosures are an impact resistant, non-conductive, light-weight hot compression molded Non-Metallic reinforced polyester
- Poured polyurethane seamless gasket provides watertight, dust-tight environmental seal
- Recessed captive screws provide smooth surfaces
- Secure mounting of pushbutton in non-rotatable notched key hole
- 300 series stainless steel used on all external hardware
- Rounded edges reduce build-up of dust and debris
- Full metal grounding strap is provided

Discount Schedule: F2

Subclass: G00

Notes: We can provide special modifications. Consult the factory for your special requirements.

Fiberglass Pushbutton Enclosures
Type 4X In-Line 30 mm
Illustration Sheet and Catalog Number

Enclosure Catalog #	Overall Dimensions H x W x D		Inside Dimensions A x B x C		Dimensions I		J		K		L		M		N		O	
	in.	mm	in.	mm	in.	mm	in.	mm	in.	mm	in.	mm	in.	mm	in.	mm	in.	mm
PV1F	6.63 x 3.81 x 3.89	168 x 97 x 99	6.00 x 3.19 x 3.63	153 x 81 x 92	5.31	135	2.50	64	4.88	124	2.94	75	4.13	105	2.19	56	3.31	84
PV2F	6.63 x 3.81 x 3.89	168 x 97 x 99	6.00 x 3.19 x 3.63	153 x 81 x 92	5.31	135	2.50	64	4.88	124	2.94	75	4.13	105	2.19	56	2.19	56
PV3F	8.88 x 3.81 x 3.89	225 x 97 x 99	8.26 x 3.19 x 3.63	210 x 81 x 92	7.56	192	2.50	64	7.13	181	2.94	75	6.38	162	2.19	56	2.19	56
PV4F	11.13 x 3.81 x 3.89	283 x 97 x 99	10.51 x 3.19 x 3.63	267 x 81 x 92	9.81	249	2.50	64	9.37	238	2.94	75	8.63	219	2.19	56	2.19	56
PV5F	13.78 x 3.63 x 3.14	350 x 92 x 80	13.19 x 3.03 x 2.87	335 x 77 x 73	12.53	318	2.38	60	12.37	314	2.75	70	11.66	296	2.03	52	2.39	61
PV6F	17.35 x 3.63 x 3.14	441 x 92 x 80	16.75 x 3.03 x 2.87	426 x 77 x 73	16.10	409	2.38	60	15.94	405	2.75	70	15.22	387	2.03	52	3.05	77

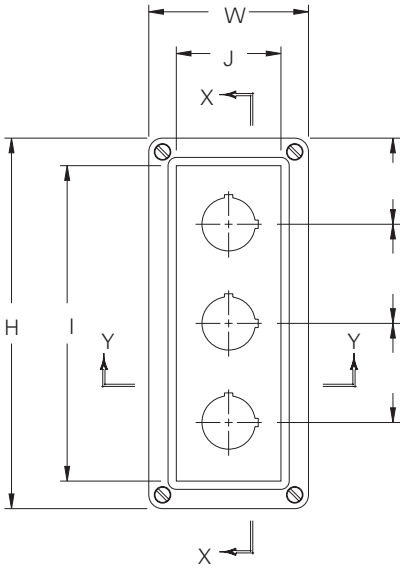

Front View

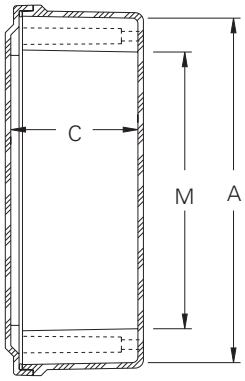

Section X-X

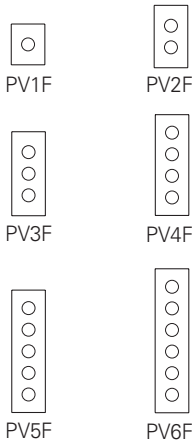

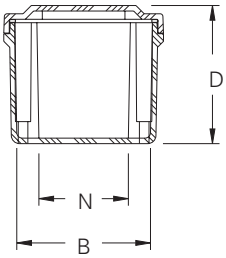

Section Y-Y

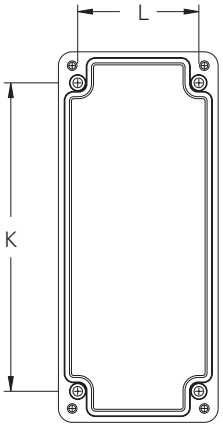

Front View Without Cover

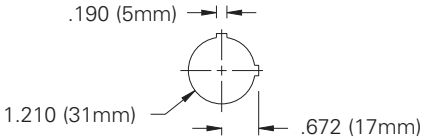

Notes: Dimensions are in inches. Millimeters shown are for reference only. Data subject to change without notice.

Fiberglass Pushbutton Enclosures
Type 4X In-Line 22 mm
Data Sheet

Application
- Designed to mount standard oil-tight pushbuttons, pilot lights, and switches
- Intended for indoor or outdoor use
- Ideally suited for harsh environments
- Protects against corrosion, windblown dust and rain, splashing water, hose directed water, and prolonged submersion

Standards
- UL/cUL 50 Listed, Type 1, Type 3, Type 4X, Type 6P, Type 12
- Conforms to NEMA Standard for Type 1, Type 3, Type 4X, Type 6P, Type 12
- Temperature Range: -40°F to 250°F (-40°C to 120°C)
- Flammability Rating: UL94-5V
- Self Extinguishing: Non-flame propagating
- Chemical Resistance: (see chart, pages 464 - 467)

Finish
- Gray color

Accessories
- See accessories (page 292 - 293)

Construction
- Enclosures are an impact resistant, non-conductive, light-weight hot compression molded Non-Metallic reinforced polyester
- Poured polyurethane seamless gasket provides watertight, dust-tight environmental seal
- Recessed captive screws provide smooth surfaces
- Secure mounting of pushbutton in non-rotatable notched key hole
- 300 series stainless steel used on all external hardware
- Rounded edges reduce build-up of dust and debris
- Full metal grounding strap is provided

Discount Schedule: F2

Subclass: G00

Notes: We can provide special modifications. Consult the factory for your special requirements.

Fiberglass Pushbutton Enclosures
Type 4X In-Line 22 mm
Illustration Sheet and Catalog Number

Enclosure Catalog #	Overall Dimensions H x W x D		Inside Dimensions A x B x C		Dimensions I		J		K		L		M		N		O	
	in.	mm	in.	mm	in.	mm	in.	mm	in.	mm	in.	mm	in.	mm	in.	mm	in.	mm
PV1MF	6.63 x 3.81 x 3.89	168 x 97 x 99	6.00 x 3.19 x 3.63	153 x 81 x 92	5.31	135	2.50	64	4.88	124	2.94	75	4.13	105	2.19	56	3.31	84
PV2MF	6.63 x 3.81 x 3.89	168 x 97 x 99	6.00 x 3.19 x 3.63	153 x 81 x 92	5.31	135	2.50	64	4.88	124	2.94	75	4.13	105	2.19	56	2.19	56
PV3MF	6.63 x 3.81 x 3.89	225 x 97 x 99	6.00 x 3.19 x 3.63	153 x 81 x 92	5.31	135	2.50	64	4.88	124	2.94	75	4.13	105	2.19	56	1.75	44
PV4MF	8.88 x 3.81 x 3.89	225 x 97 x 99	8.26 x 3.19 x 3.63	210 x 81 x 92	7.56	192	2.50	64	7.13	181	2.94	75	6.38	162	2.19	56	2.09	53
PV5MF	11.13 x 3.81 x 3.89	283 x 97 x 99	10.51 x 3.19 x 3.63	267 x 81 x 92	9.81	249	2.50	64	9.37	238	2.94	75	8.63	219	2.19	56	2.44	62
PV6MF	11.13 x 3.81 x 3.89	283 x 97 x 99	10.51 x 3.19 x 3.63	267 x 81 x 92	9.81	249	2.50	64	9.37	238	2.94	75	8.63	219	2.19	56	1.66	42

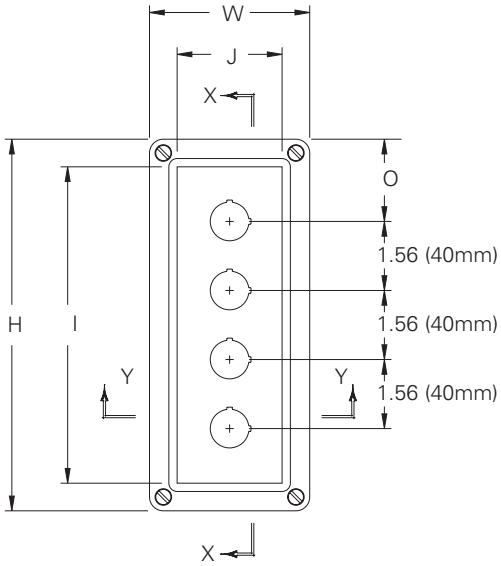

Front View

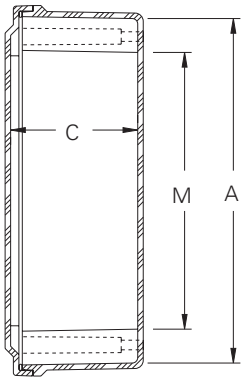

Section X-X

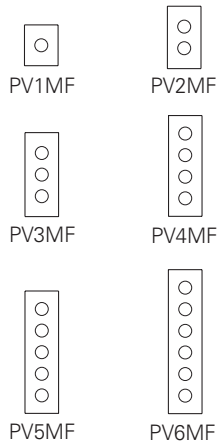

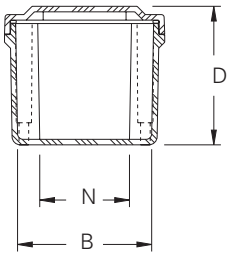

Section Y-Y

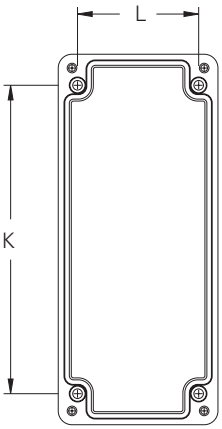

Front View Without Cover

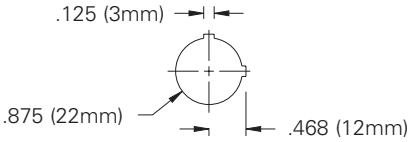

Notes: Dimensions are in inches. Millimeters shown are for reference only. Data subject to change without notice.

Fiberglass Pushbutton Enclosures
Type 4X Multi-Hole 30 mm
Data Sheet

Application
- Designed to mount standard oil-tight pushbuttons, pilot lights, and switches
- Intended for indoor or outdoor use
- Ideally suited for harsh environments
- Protects against corrosion, windblown dust and rain, splashing water, hose directed water, and prolonged submersion

Standards
- UL/cUL 50 Listed, Type 1, Type 3, Type 4X, Type 6P, Type 12
- Conforms to NEMA Standard for Type 1, Type 3, Type 4X, Type 6P, Type 12
- Temperature Range: -40°F to 250°F (-40°C to 120°C)
- Flammability Rating: UL94-5V
- Self Extinguishing: Non-flame propagating
- Chemical Resistance: (see chart, pages 464 - 467)

Finish
- Gray color

Accessories
- Back Panels (page 290)
- See accessories (pages 292 - 294)

Construction
- Enclosures are an impact resistant, non-conductive, light-weight hot compression molded Non-Metallic reinforced polyester
- Poured polyurethane seamless gasket provides watertight, dust-tight environmental seal
- Captive screws provide smooth surfaces
- Secure mounting of pushbutton in non-rotatable notched key hole
- 300 series stainless steel used on all external hardware
- Integral flange molded in place for ease of mounting
- Integral mounting bosses utilize threaded brass inserts accepting #10-32 screws for mounting optional panel
- Rounded edges reduce build-up of dust and debris
- Full metal grounding strap is provided
- Stainless steel beaded chain for securing cover after lift off

Discount Schedule: F2

Subclass: G00

Notes: We can provide special modifications. Consult the factory for your special requirements.

Fiberglass Pushbutton Enclosures
Type 4X Multi-Hole 30 mm
Illustration Sheet and Catalog Number

Enclosure Catalog #	Overall Dimensions H x W x D		Inside Dimensions A x B x C		E		F		Hole Dia.		Panel No.
	in.	mm	in.	mm	in.	mm	in.	mm	in.	mm	
PB4F	7.50 x 7.50 x 4.75	191 x 191 x 121	5.72 x 5.72 x 4.45	145 x 145 x 113	6.75	171	4.00	101	0.31	8	AW66__
PB6F-SAP	9.62 x 7.50 x 4.74	244 x 191 x 121	7.73 x 5.74 x 4.45	196 x 146 x 113	8.88	225	4.00	101	0.31	8	AW86__
PB9F	11.62 x 9.41 x 4.25	295 x 239 x 108	9.73 x 7.73 x 3.98	247 x 196 x 101	10.75	273	6.00	152	0.31	8	AW108__

Enclosure Catalog #	Dimensions													
	J		K		L		M		N		O		P	
	in.	mm	in.	mm	in.	mm	in.	mm	in.	mm	in.	mm	in.	mm
PB4F	4.00	101	4.25	108	4.25	108	0.25	6	7.52	191	2.64	67	2.64	67
PB6F-SAP	4.00	101	6.25	159	4.25	108	0.25	6	9.50	242	2.64	67	2.51	64
PB9F	3.50	89	8.25	209	6.25	159	0.25	6	11.35	288	3.43	87	2.45	62

Panel Finishes

Example: AW108__

Insert for __

P = Carbon Steel
SP = Stainless Steel
AP = Aluminum

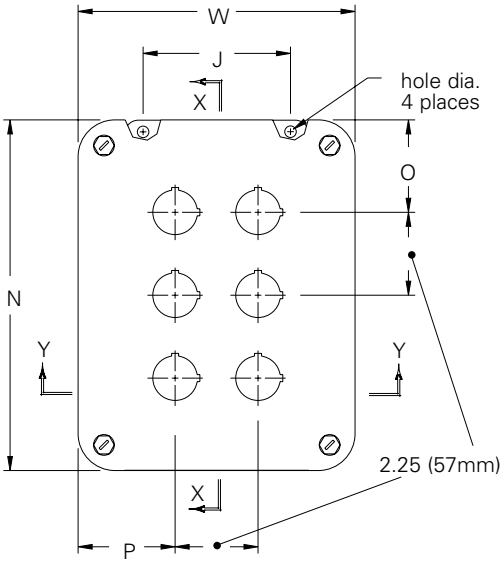

Front View

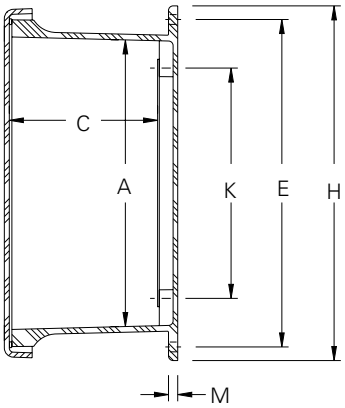

Section X-X

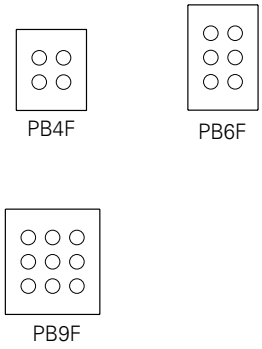

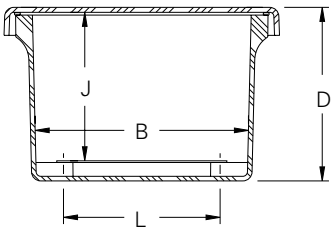

Section Y-Y

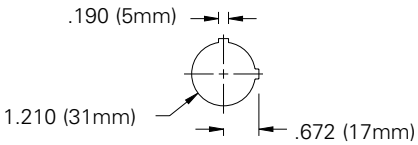

Notes: Dimensions are in inches. Millimeters shown are for reference only. Data subject to change without notice.

Non-Metallic Accessories

Illustration Sheet and Catalog Number

Discount Schedule: F2

Subclass: DSA, DSB

Back Panels

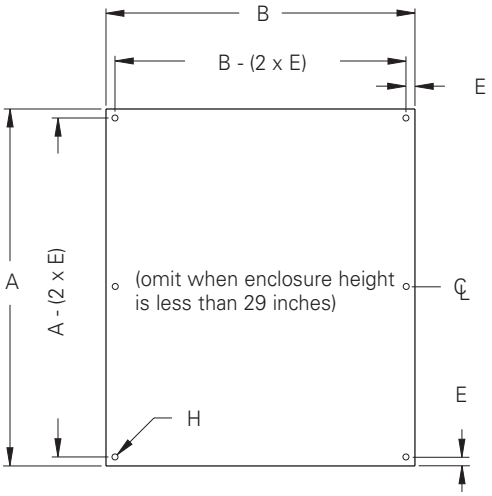

Polycarbonate swing panel kit - aluminum

Flat Panel for Non-Metallic Enclosures														
				A		B		E		Hole Dia. H			Fits Enclosure (Nominal) Height x Width	
Painted Steel	Stainless	Aluminum	Polycarbonate Swing Panel Kit	in.	mm	in.	mm	in.	mm	in.	mm	Gauge	in.	mm
AW64P	AW64SP	AW64AP		4.87	124	2.87	73	0.31	8	0.25	6	14	6.00 x 4.00	152 x 102
AW66P	AW66SP	AW66AP	66PCSP	4.87	124	4.87	124	0.31	8	0.25	6	14	6.00 x 6.00	152 x 152
AW76P	AW76SP	AW76AP		6.00	152	4.87	124	0.31	8	0.25	6	14	7.00 x 6.00	178 x 152
AW86P	AW86SP	AW86AP	86PCSP	6.87	174	4.87	124	0.31	8	0.25	6	14	8.00 x 6.00	203 x 152
AW88P	AW88SP	AW88AP	88PCSP	6.87	174	6.87	174	0.31	8	0.25	6	14	8.00 x 8.00	203 x 203
AW96P	AW96SP	AW96AP		8.25	209	4.87	124	0.31	8	0.25	6	14	9.00 x 6.00	228 x 152
AW108P	AW108SP	AW108AP	108PCSP	8.87	225	6.87	174	0.31	8	0.25	6	14	10.00 x 8.00	254 x 203
AW1010P	AW1010SP	AW1010AP	1010PCSP	8.87	225	8.87	225	0.31	8	0.25	6	14	10.00 x 10.00	254 x 254
AW1210P	AW1210SP	AW1210AP	1210PCSP	10.87	276	8.87	225	0.31	8	0.25	6	14	12.00 x 10.00	305 x 254
AW1212P	AW1212SP	AW1212AP		10.87	276	10.87	276	0.31	8	0.25	6	14	12.00 x 12.00	305 x 305
AW147P	AW147SP	AW147AP		12.87	327	5.87	149	0.31	8	0.25	6	14	14.00 x 7.00	356 x 178
AW1412P	AW1412SP	AW1412AP	1412PCSP	12.87	327	10.87	276	0.31	8	0.25	6	14	14.00 x 12.00	356 x 305
AW1614P	AW1614SP	AW1614AP	1614PCSP	14.87	378	12.87	327	0.31	8	0.25	6	14	16.00 x 14.00	406 x 356
AW1816P	AW1816SP	AW1816AP	1816PCSP	16.88	429	14.88	378	0.31	8	0.25	6	14	18.00 x 16.00	457 x 406
AW2016PJ	AW2016SPJ	AW2016APJ		18.88	479	14.88	378	0.31	8	0.25	6	14	20.00 x 16.00	508 x 406
AWF2424PJ	AWF2424SPJ	AWF2424APJ		22.88	581	22.88	581	0.31	8	0.25	6	14	24.00 x 24.00	610 x 610
AW2016P	AW2016SP	AW2016AP	2016PCSP	17.00	432	13.00	330	0.88	22	0.56	14	12	20.00 x 16.00	508 x 406
AW2412P	AW2412SP	AW2412AP		21.00	533	9.00	229	0.88	22	0.56	14	12	24.00 x 12.00	610 x 305
AWF2420P	AWF2420SP	AWF2420AP		21.00	533	17.00	432	0.88	22	0.56	14	12	24.00 x 20.00	610 x 508
AWF2424P	AWF2424SP	AWF2424AP		21.00	533	21.00	533	0.88	22	0.56	14	12	24.00 x 24.00	610 x 610
AWF3020P	AWF3020SP	AWF3020AP		27.00	686	17.00	432	0.88	22	0.56	14	12	30.00 x 20.00	762 x 508
AWF3024P	AWF3024SP	AWF3024AP		27.00	686	21.00	533	0.88	22	0.56	14	12	30.00 x 24.00	762 x 610
AWF3622P	AWF3622SP	AWF3622AP		31.00	787	22.00	559	1.00	25	0.56	14	12	36.00 x 48.00	914 x 1219
AWF3630P	AWF3630SP	AWF3630AP		33.00	838	27.00	686	0.88	22	0.56	14	12	36.00 x 30.00	914 x 762

Notes: Dimensions are in inches. Millimeters shown are for reference only. Data subject to change without notice.

Non-Metallic Accessories

Illustration Sheet and Catalog Number

Discount Schedule: F2

Subclass: DSB

Back Panels

Flanged Panel for Non-Metallic Enclosures			A		B		E		Hole Dia. H			Fits Enclosure (Nominal) Height x Width		
Painted Steel	Stainless	Aluminum	in.	mm	in.	mm	in.	mm	in.	mm	Gauge	in.	mm	See Drawing
AWF4836P	AWF4836SP	AWF4836AP	45.00	1143	33.00	838	0.88	22	0.56	14	12	48.00 x 36.00	1219 x 914	1
AWF6036P	AWF6036SP	AWF6036AP	57.00	1448	33.00	838	0.88	22	0.56	14	12	60.00 x 36.00	1524 x 914	
AWF7221P	AWF7221SP	AWF7221AP	64.00	1625	21.50	546	1.00	25	0.56	14	12	72.00 x 48.00	1829 x 1219	2
AWF7224P	AWF7224SP	AWF7224AP	64.00	1625	20.00	508	1.00	25	0.56	14	12	72.00 x 24.00	1829 x 609	
AWF7233P	AWF7233SP	AWF7233AP	64.00	1625	33.50	851	1.00	25	0.56	14	12	72.00 x 72.00	1829 x 1829	
AWF7236P	AWF7236SP	AWF7236AP	64.00	1625	32.00	813	1.00	25	0.56	14	12	72.00 x 36.00	1829 x 914	
--	--	--	64.00	1625	21.50	546	1.00	25	0.56	14	12	72.00 x 48.00	1829 x 1219	
--	--	--	64.00	1625	33.50	851	1.00	25	0.56	14	12	72.00 x 72.00	1829 x 1329	
AWF9036P	AWF9036SP	AWFF9036AP	82.00	2083	32.00	813	1.00	25	0.56	14	12	90.00 x 36.00	2286 x 914	3

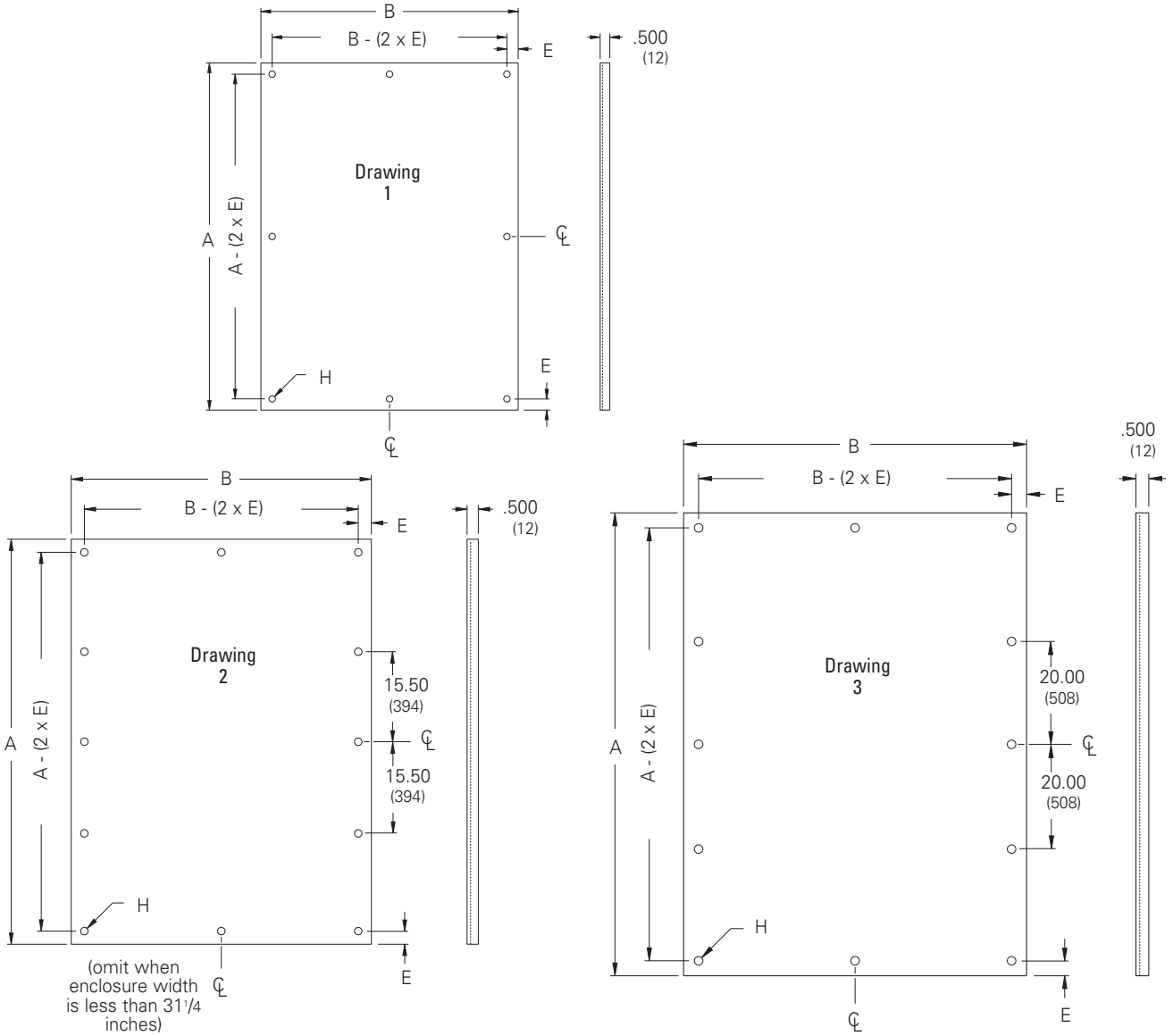

Notes: Dimensions are in inches. Millimeters shown are for reference only. Data subject to change without notice.

Non-Metallic Accessories

Illustration Sheet and Catalog Number

Discount Schedule: F2
Subclass: G00

Breather Vent

Enclosure Catalog #
BV4X

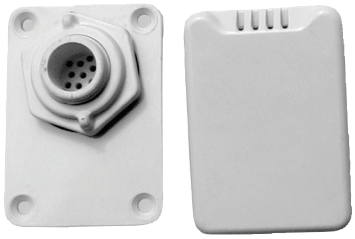

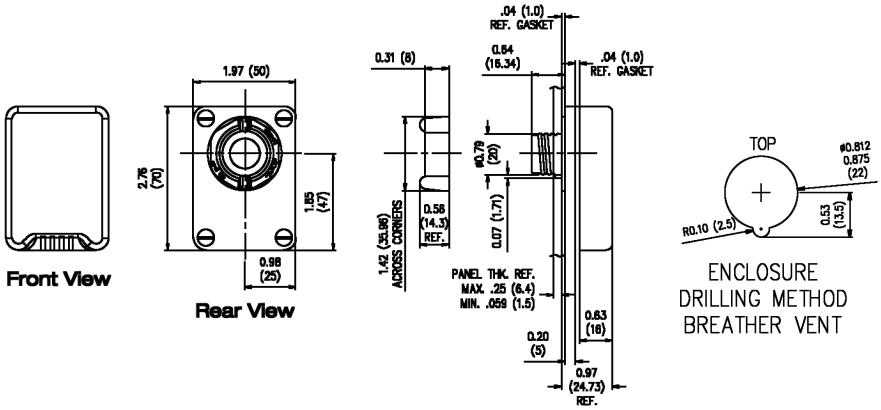

Non-metallic breather vent allows an enclosure to breathe, allowing the free passage of air while maintaining UL Type 4X enclosure integrity as a recognized component.

Drain Vent

Enclosure Catalog #
DV4X

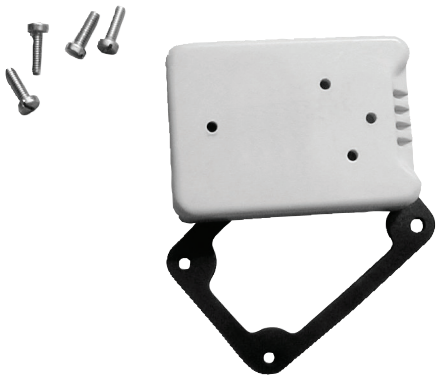

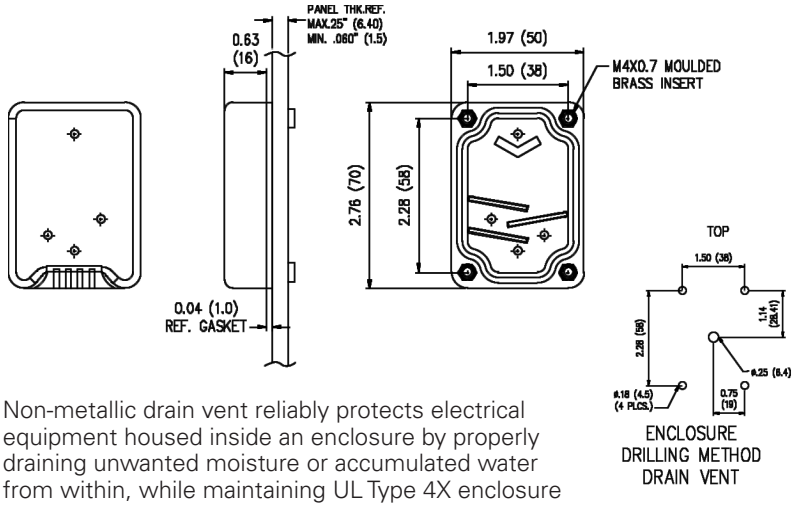

Non-metallic drain vent reliably protects electrical equipment housed inside an enclosure by properly draining unwanted moisture or accumulated water from within, while maintaining UL Type 4X enclosure integrity as a recognized component.

Drain & Vent

Enclosure Catalog #
DV

Vapor Capsule

Enclosure Catalog #
BLVC

Vapor capsules contain a unique phase inhibitor designed to protect metallic surfaces within an enclosure against airborne corrosion. Simply place these self-contained capsules inside an enclosure, the vapors readily permeate every point, passivating all metallic surfaces. When the capsule is removed from its sealed package, it begins to emit an invisible, no-toxic vapor which is diffused throughout the surrounding atmosphere until the air is saturated. The vapor then passivates the metal surface against atmospheric corrosion by reducing the electro-chemical activity of the metal surfaces.

Notes: Dimensions are in inches. Millimeters shown are for reference only. Data subject to change without notice.

Non-Metallic Accessories

Illustration Sheet and Catalog Number

Discount Schedule: F2
Subclass: G00

Enclosure Catalog #	Application	Max. Hole in.	Max. Hole mm	Hole Seal in.	Hole Seal mm
SPBGFG	Miniature oil-tight pushbutton holes	0.88	22	1.22	31
SPBFG	Standard oil-tight pushbutton holes	1.25	32	1.75	44
S050FG	1/2" conduit holes	0.88	22	1.38	35
S075FG	3/4" conduit holes	1.06	27	1.56	40
S100FG	1" conduit holes	1.38	35	1.88	48
S125FG	1 1/4" conduit holes	1.69	43	2.19	56
S150FG	1 1/2" conduit holes	2.00	51	2.50	64
S200FG	2" conduit holes	2.50	64	3.00	76
S250FG	2 1/2" conduit holes	3.00	76	3.50	89
S300FG	3" conduit holes	3.62	92	4.12	105
S350FG	3 1/2" conduit holes	4.12	105	4.62	117
S400FG	4" conduit holes	4.62	117	5.12	130

Oil-Tight Hole Seals

Helps protects knockout openings and extra pushbutton or conduit openings from dirt, oil, dust and water. Each hole seal has oil-resistant gasketing and lock nut.

Louver Plate Vent

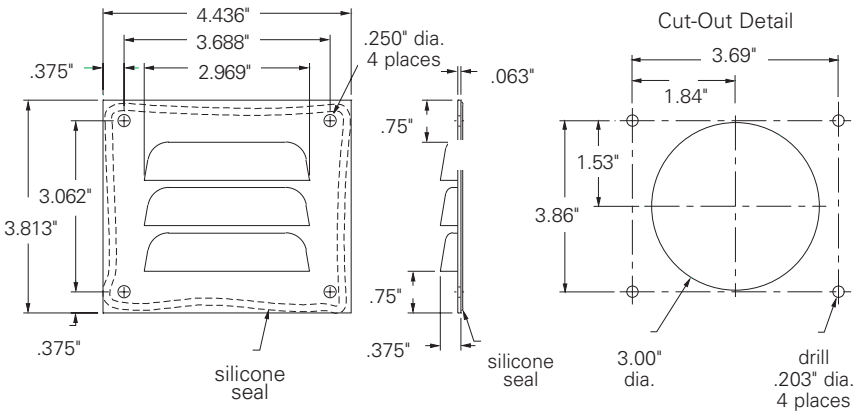

Enclosure Catalog #
LPKF

Carrying Handle

Enclosure Catalog #
CARRY HANDLE

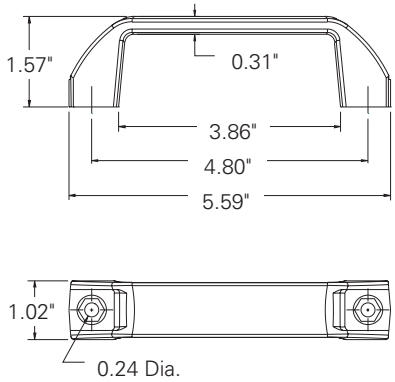

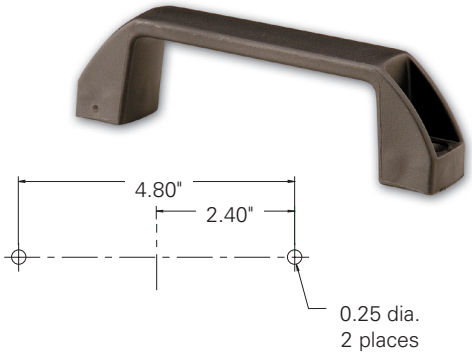

Notes: Dimensions are in inches. Millimeters shown are for reference only. Data subject to change without notice.

Non-Metallic Accessories

Illustration Sheet and Catalog Number

Discount Schedule: F2
Subclass: G00

Encapsulated Screws

Enclosure Catalog #
ENCAP2K
ENCAP4K

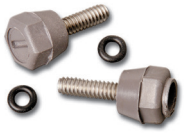

ENCAP2K

ENCAP4K

Stainless Steel Screws

Enclosure Catalog #	Description
SS2PK	Set of 2
SS4PK	Set of 4

SS2PK

SS4PK

Polycarbonate Accessories
Swing Panel Mounts & Slot Nut Kit

Catalog #	Description	Pieces included
SPMKPC	Swing panel mounts	Four per kit
SNKPC	Slot nut kit	Two nuts & two screws

Swing panel mounts - **SPMKPC**

Slot nut kit - **SNKPC**

Mounting Feet

Enclosure Catalog #
MTGFTKITSD

Notes: Dimensions are in inches. Millimeters shown are for reference only. Data subject to change without notice.

Wall-Mount Enclosures Type 12 Flange-Mount 296-298
Wall-Mount Enclosures Type 4 and 4X Premier™ Series 2-Point or 3-Point Locking 299-300
Wall-Mount Enclosures Disconnect Mechanisms 301-306
Ground-Mount Enclosures Type 4 Center and Flange-Mount Floor-Standing 3-Point Locking 307-310
Ground-Mount Enclosures Type 4X/12 Center and Flange-Mount Floor-Standing 3-Point Locking ... 310a-311
Floor-Standing Enclosures Disconnect Mechanisms 312-319
Ground-Mount Enclosures Type 4/12 Heavy-Duty Single and Multi Door
Flange-Mount Free-Standing 3-Point Locking 320-325
Ground-Mount Enclosures Type 4X/12 Heavy-Duty Single and Multi Door
Flange-Mount Free-Standing 3-Point Locking 325a-326
Ground-Mount Enclosures Type 12 Modular Free-Standing 327-329
Free-Standing Enclosures Disconnect Mechanisms 330-339

Wall-Mount Enclosures
Type 12 Flange-Mount
Data Sheet

Application
- Houses electrical controls and instruments
- Protects against circulating dust, falling dirt and dripping noncorrosive liquids

- **Designed to house the following:**

1. Allen-Bradley† Bulletin 1494V or 1494U disconnect switches with flange-mounted variable depth operating mechanisms and Bulletin 1494V or 1494U flange-mounted variable depth operating mechanisms for circuit breakers.
2. Cutler-Hammer† Type C361 flange-mounted variable depth operating mechanisms with disconnect switches and Type C371 flange mounted variable depth operating mechanisms for circuit breakers. Also Flex Shaft™ handle mechanisms for circuit breakers.
3. General Electric† Type STDA flange handles and variable depth operating mechanisms for disconnect switches and circuit breakers. Also Spectra Flex™ cable operators for circuit breakers.
4. I-T-E Max-Flex™† flange-mounted variable depth operating handle for disconnect switches and circuit breakers as well as some fixed depth operators for disconnect switches.
5. Square D† Class 9422 disconnect switches with flange-mounted variable depth operating mechanisms or cable mechanisms and Class 9422 flange-mounted variable depth operating mechanisms or,cable mechanisms for circuit breakers.
6. ABB Controls† flange-mounted variable depth operating mechanisms for disconnect switches and circuit breakers.

Standards
- UL 508A listed, Type 12 and Type 13
- CSA C22.2 No.94 certified, Type 12 and Type 13
- Conforms to NEMA standard for Type 12 and Type 13

Finish
- Wash and phosphate undercoat
- ANSI 61 gray polyester powder finish

Accessories
- Panels
- Touch-up paint
- See Accessories section

Construction
- Enclosure and door are fabricated from (14) gauge steel
- All continuous welded seams are finished smooth
- Door is secured to the body with a heavy-duty continuous hinge
- Door has an interlock bracket, collar studs and hardware to accept a door closing mechanism
- Door has a seamless poured in-place gasket
- Ground stud provided on door and body
- Print pocket provided
- Formed lip around enclosure opening diverts liquids and contaminants
- Holes are provided on body flange and door for mounting a disconnect operating mechanism, (mechanism not furnished with enclosure — see manufacturer's table, pages 301 - 306)
- Enclosures include a properly sized 2-pt latching bar (under 40 inches) or a 3-point latching bar (40 inches or higher)
- .375-16 collar studs are provided for mounting optional panel
- External mounting feet are provided for secure wall mounting

Discount Schedule: C2

Subclass: D00

Important Note
Latching bar, latching bar bracket interlock, hardware and instruction sheet to locate and install disconnects are furnished with enclosure. Disconnect switch (or circuit breaker), operating handle, operating mechanism and door closing hardware are **not** furnished with enclosure, see disconnect ordering information pages 301-306

† Marks are the property of their respective owners.

Notes: We can provide special sizes, finishes and other modifications. Consult the factory for your special requirements.

Wall-Mount Enclosures
Type 12 Flange-Mount
Illustration Sheet and Catalog Number

Enclosure Catalog Number	Enclosure Size Height x Width x Depth A x B x C in.	mm	Panel Catalog Number	Panel Size Height x Width in.	mm
FD20218-12	20.00 x 21.37 x 8.00	508 x 543 x 203	AW2020P	17.00 x 17.00	432 x 432
FD24218-12	24.00 x 21.37 x 8.00	610 x 543 x 203	AW2420P	20.87 x 16.87	530 x 428
FD24258-12	24.00 x 25.37 x 8.00	610 x 644 x 203	AW2424P	20.87 x 20.87	530 x 530
FD30218-12	30.00 x 21.37 x 8.00	762 x 543 x 203	AW3020P	26.87 x 16.87	682 x 428
FD30258-12	30.00 x 25.37 x 8.00	762 x 644 x 203	AW3024P	26.87 x 20.87	682 x 530
FD36258-12	36.00 x 25.37 x 8.00	914 x 644 x 203	AW3624P	32.87 x 20.87	835 x 530
FD36318-12	36.00 x 31.37 x 8.00	914 x 797 x 203	AW3630P	32.87 x 26.87	835 x 682
FD42318-12	42.00 x 31.37 x 8.00	1067 x 797 x 203	AW4230P	38.87 x 26.87	987 x 682
FD42378-12	42.00 x 37.37 x 8.00	1067 x 949 x 203	AW4236P	38.87 x 32.87	987 x 835
FD48378-12	48.00 x 37.37 x 8.00	1219 x 949 x 203	AW4836P	44.87 x 32.87	1140 x 835
FD60378-12	60.00 x 37.37 x 8.00	1524 x 949 x 203	AW6036P	56.87 x 32.87	1444 x 835
FD202110-12	20.00 x 21.37 x 10.00	508 x 543 x 254	AW2020P	17.00 x 17.00	432 x 432
FD242110-12	24.00 x 21.37 x 10.00	610 x 543 x 254	AW2420P	20.87 x 16.87	530 x 428
FD242510-12	24.00 x 25.37 x 10.00	610 x 644 x 254	AW2424P	20.87 x 20.87	530 x 530
FD302110-12	30.00 x 21.37 x 10.00	762 x 543 x 254	AW3020P	26.87 x 16.87	682 x 428
FD302510-12	30.00 x 25.37 x 10.00	762 x 644 x 254	AW3024P	26.87 x 20.87	682 x 530
FD362510-12	36.00 x 25.37 x 10.00	914 x 644 x 254	AW3624P	32.87 x 20.87	835 x 530
FD363110-12	36.00 x 31.37 x 10.00	914 x 797 x 254	AW3630P	32.87 x 26.87	835 x 682
FD423110-12	42.00 x 31.37 x 10.00	1067 x 797 x 254	AW4230P	38.87 x 26.87	987 x 682
FD423710-12	42.00 x 37.37 x 10.00	1067 x 949 x 254	AW4236P	38.87 x 32.87	987 x 835
FD483710-12	48.00 x 37.37 x 10.00	1219 x 949 x 254	AW4836P	44.87 x 32.87	1140 x 835
FD603710-12	60.00 x 37.37 x 10.00	1524 x 949 x 254	AW6036P	56.87 x 32.87	1444 x 835
FD302512-12	30.00 x 25.37 x 12.00	762 x 644 x 305	AW3024P	26.87 x 20.87	682 x 530
FD363112-12	36.00 x 31.37 x 12.00	914 x 797 x 305	AW3630P	32.87 x 26.87	835 x 682
FD423112-12	42.00 x 31.37 x 12.00	1067 x 797 x 305	AW4230P	38.87 x 26.87	987 x 682
FD423712-12	42.00 x 37.37 x 12.00	1067 x 949 x 305	AW4236P	38.87 x 32.87	987 x 835
FD483712-12	48.00 x 37.37 x 12.00	1219 x 949 x 305	AW4836P	44.87 x 32.87	1140 x 835
FD603712-12	60.00 x 37.37 x 12.00	1524 x 949 x 305	AW6036P	56.87 x 32.87	1444 x 835
FD603712A-12*	60.00 x 37.37 x 12.00	1524 x 949 x 305	AW6036P	56.87 x 32.87	1444 x 835
FD363116-12	36.00 x 31.37 x 16.00	914 x 797 x 406	AW3630P	32.87 x 26.87	835 x 682
FD483716-12	48.00 x 37.37 x 16.00	1219 x 949 x 406	AW4836P	44.87 x 32.87	1140 x 835
FD603716-12	60.00 x 37.37 x 16.00	1524 x 949 x 406	AW6036P	56.87 x 32.87	1444 x 835

* The 400 amp and 600 amp Allen-Bradley† Bulletin 1494V or 1494U disconnect switches and I-T-E Siemens† 800 amp and 1200 amp circuit breakers will not fit any other enclosure except catalog number FD603712A-12. Enclosures 12 inches and 16 inches deep can be modified to accept I-T-E Siemens† 800 amp and 1200 amp circuit breakers. When enclosure "A" dimension is 30, 36, or 42 inches, verify the amount of wire bend space required for both the line and load sides.

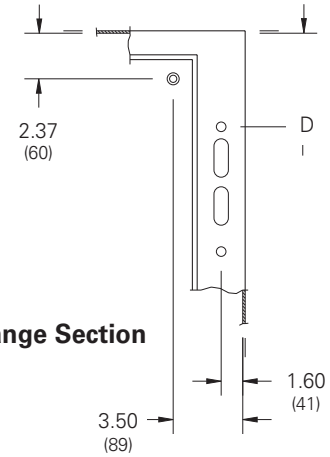

Flange Section

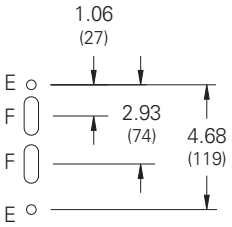

Flange Hole Detail

D
(When enclosure depth is:)

8 in.	8 mm	10 in.	10 mm	12 in.	12 mm	16 in.	16 mm
4.75	121	7.09	180	11.62	295	11.62	295

E = .28 (7) Dia. hole
F = .50 x 1.50 (13x38) slot

Flange Hole Location Table

† Marks are the property of their respective owners.

Notes: Catalog number FD603712A-12 has a larger cutout in the enclosure flange to accomodate the Allen-Bradley 1494V-H2 and the I-T-E FHOHN operating handles. Dimensions are in inches. Millimeters shown are for reference only. Data subject to change without notice.

Wall-Mount Enclosures
Type 12 Flange-Mount
Illustration Sheet

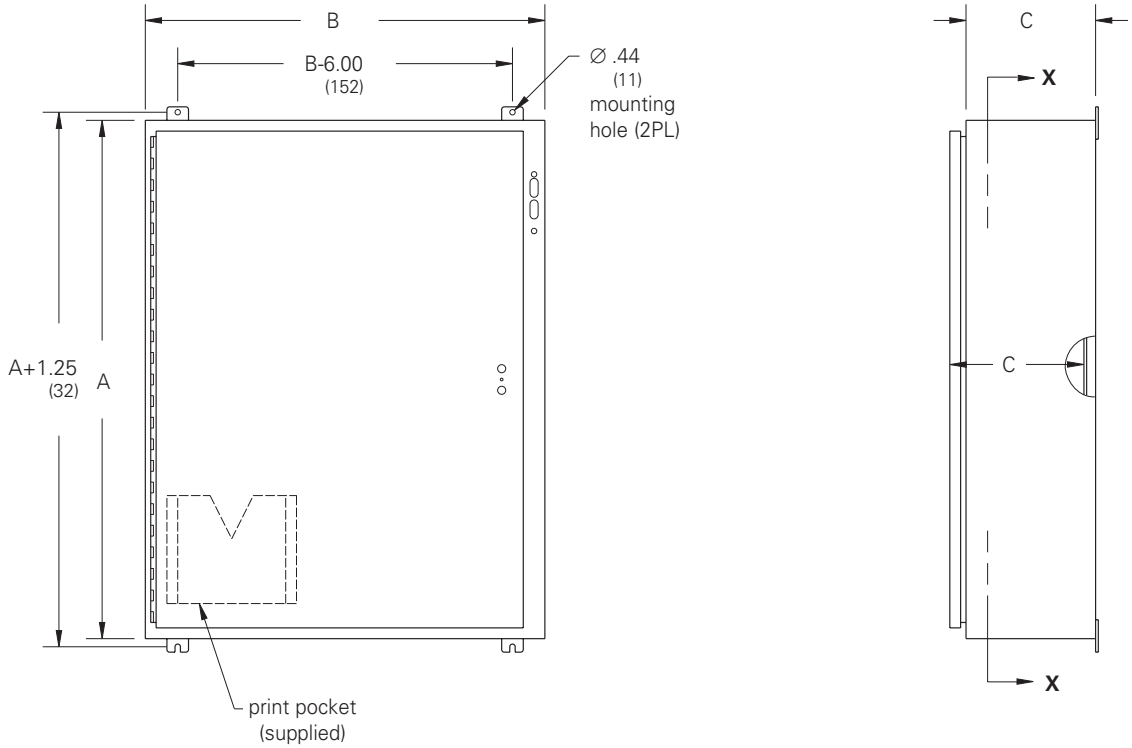

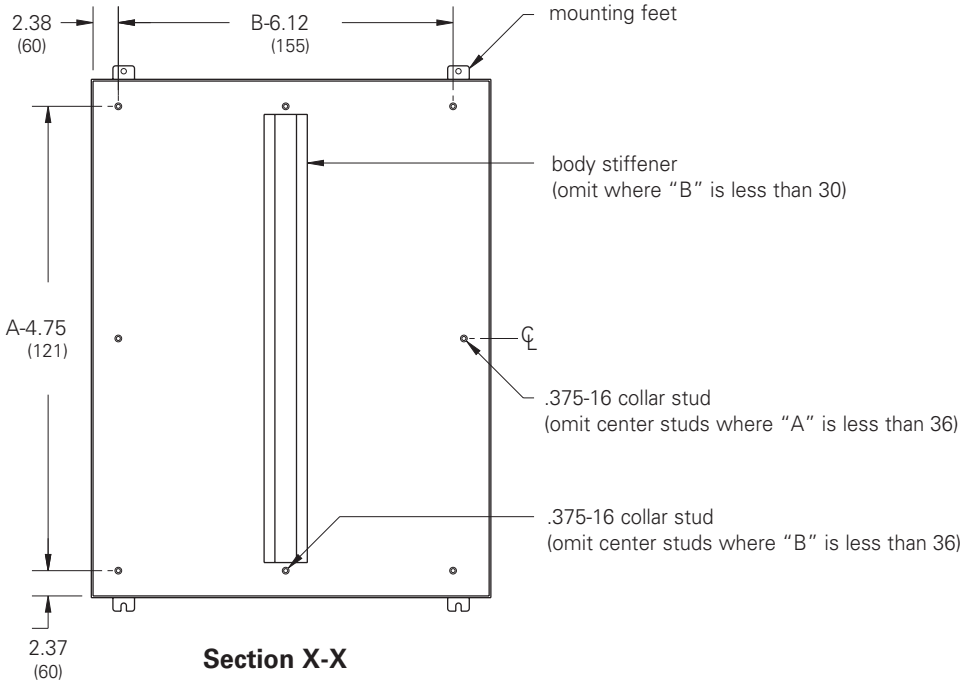

Section X-X

Notes: Dimensions are in inches. Millimeters shown are for reference only. Data subject to change without notice.

Wall-Mount Enclosures - Type 4 and 4X Premier™ Series with 2-Point or 3-Point Locking

Data Sheet

Application

- Provides housing for electrical controls and instruments
- Suitable for indoor or outdoor use
- Protects against circulating and windblown dust, falling dirt, dripping non-corrosive liquids, rain, splashing water, and hose-directed water

- **Designed to house the following:**

1. Allen-Bradley† Bulletin 1494V or 1494U disconnect switches with flange-mounted variable depth operating mechanisms and Bulletin 1494V or 1494U flange-mounted variable depth operating mechanisms for circuit breakers.
2. Cutler-Hammer† Type C361 flange-mounted variable depth operating mechanisms with disconnect switches and Type C371 flange-mounted variable depth operating mechanisms for circuit circuit breakers. Also Flex Shaft™ handle mechanisms for circuit breakers.
3. General Electric† Type STDA flange handles and variable depth operating mechanisms for disconnect switches and circuit breakers. Also Spectra Flex™ cable operators for circuit breakers.
4. ITE Max-Flex™† flange-mounted variable depth operating handle for disconnect switches and circuit breakers, as well as some fixed depth operators for disconnect switches.
5. Square D† Class 9422 disconnect switches with flange mounted variable depth operating mechanisms and Class 9422 flange-mounted variable depth operating mechanisms or cable mechanisms for circuit breakers.
6. ABB Controls† flange-mounted variable depth operating mechanisms for disconnect switches and circuit breakers.

† Marks are the property of their respective owners.

Standards

- UL 508A listed, Type 4 or 4X, Type 12 and Type 13
- CSA C22.2 No.94 certified, Type 12 and Type 13
- Conforms to NEMA standard for Type 4 and Type 12/13

Finish

- Wash and phosphate undercoat
- ANSI 61 gray polyester powder finish
- Stainless enclosures are offered with a brushed finish in both 304 and 316L stainless steel.

Accessories

- Premier panels
- NEMA panel adapters
- Depth adjustment brackets
- Print pockets
- Mounting foot kits

Construction

- Enclosure and door are fabricated from code gauge steel (see table)
- Hardware kit (provided) contains grounding hardware, .312-18 flanged hex nuts for panel mounting, and sealing washers for body mounting holes
- Body flange trough design, formed around body opening, diverts liquid contaminants away from door opening
- Reduced width flange design increases enclosure opening
- Ground stud provided on enclosure body with provision on door
- .312-18 collar studs are provided for mounting optional Premier panels
- Enclosure mounting holes in body provided for direct mounting or optional mounting feet
- Utility bracket provides wire management and accessory mounting
- Padlocking "tool-to-open" handle with 2-point or 3-point door closing hardware installed
- Door is secured to the body with a concealed hinge
- Door is easily removed and interchangeable
- Door has a seamless foam-in-place gasket
- Door opens 170° for easy access
- Latching system interlocks with the disconnect handle for added safety

Discount Schedule: C2

Subclass: TCD (Type 4)
TED (Type 4X)

Important Note
Door closing hardware, handle,latching bar, latching bar bracket interlock, hardware and instruction sheet to locate and install disconnects are furnished with enclosure.
Disconnect switch (or circuit breaker), operating handle and operating mechanism are **not** furnished with enclosure, see disconnect ordering information pages 301 - 306

Notes: We can provide special sizes, finishes and other modifications. Consult the factory for your special requirements.

Wall-Mount Enclosures - Type 4 and 4X Premier™ Series with 2-Point or 3-Point Locking

Illustration Sheet and Catalog Number

Enclosure Catalog Number	Door Gauge in.	Body Gauge in.	Enclosure Size Height x Width x Depth A x B x C in.	mm	Panel Catalog Number	Panel Size H x W in.	mm	Mounting D x E in.	mm	J in.	mm
DSC20228 DSC20228SS4 DSC20228SS6	14	16	20.00 x 22.00 x 8.00	508 x 559 x 203	2020P 2020PSS4 —	18.00 x 18.00	457 x 457	18.50 x 20.37	470 x 518	5.0	127
DSC24228 DSC24228SS4 DSC24228SS6	14	16	24.00 x 22.00 x 8.00	610 x 559 x 203	2420P 2420PSS4 —	22.00 x 18.00	559 x 457	22.50 x 20.37	572 x 518	6.0	153
DSC24268 DSC24268SS4 DSC24268SS6	14	16	24.00 x 26.00 x 8.00	610 x 660 x 203	2424P 2424PSS4 —	22.00 x 22.00	559 x 559	22.50 x 24.37	572 x 619	6.0	153
DSC30268 DSC30268SS4 DSC30268SS6	14	16	30.00 x 26.00 x 8.00	762 x 660 x 203	3024P 3024PSS4 —	28.00 x 22.00	711 x 559	28.50 x 24.37	724 x 619	6.0	153
DSC36268 DSC36268SS4 DSC36268SS6	14	14	32.00 x 26.00 x 8.00	914 x 660 x 203	3624P 3624PSS4 —	34.00 x 22.00	864 x 559	34.50 x 24.37	876 x 619	6.0	153
DSC36328 DSC36328SS4 DSC36328SS6	14	14	36.00 x 32.00 x 8.00	914 x 813 x 203	3630P 3630PSS4 —	34.00 x 28.00	864 x 711	34.50 x 30.37	869 x 771	6.0	153
DSC363212 DSC363212SS4 DSC363212SS6	14	14	36.00 x 32.00 x 12.00	914 x 813 x 305	3630P 3630PSS4 —	34.00 x 28.00	864 x 711	34.50 x 30.37	869 x 771	6.0	153
DSC423212 DSC423212SS4 DSC423212SS6	14	14	42.00 x 32.00 x 12.00	1067 x 813 x 305	4230P 4230PSS4 —	40.00 x 28.00	1016 x 711	40.50 x 30.37	1029 x 771	21.0	53
DSC423812 DSC423812SS4 DSC423812SS6	14	14	42.00 x 38.00 x 12.00	1067 x 965 x 305	4236P 4236PSS4 —	40.00 x 34.00	1016 x 864	40.50 x 36.37	1029 x 924	21.0	53
DSC483812 DSC483812SS4 DSC483812SS6	14	14	48.00 x 38.00 x 12.00	1219 x 965 x 305	4836P 4836PSS4 —	46.00 x 34.00	1168 x 864	46.50 x 36.37	1181 x 924	24.0	610
DSC603812 DSC603812SS4 DSC603812SS6	14	14	60.00 x 38.00 x 12.00	1524 x 965 x 305	6036P 6036PSS4 —	58.00 x 34.00	1473 x 864	58.50 x 36.37	1486 x 924	30.0	762
DSC423816 DSC423816SS4 DSC423816SS6	14	14	42.00 x 38.00 x 16.00	1067 x 965 x 406	4236P 4236PSS4 —	40.00 x 34.00	1016 x 864	40.50 x 36.37	1029 x 924	21.0	53
DSC483816 DSC483816SS4 DSC483816SS6	14	14	48.00 x 38.00 x 16.00	1219 x 965 x 406	4836P 4836PSS4 —	46.00 x 34.00	1168 x 864	46.50 x 36.37	1181 x 924	24.0	610
DSC603816 DSC603816SS4 DSC603816SS6	14	14	60.00 x 38.00 x 16.00	1524 x 965 x 406	6036P 6036PSS4 —	58.00 x 34.00	1473 x 864	58.50 x 36.37	1486 x 924	30.0	762

Painted Steel - Part Number alone. Stainless Steel 304 - Part Number with SS4. Stainless Steel 316 - Part Number with SS6.

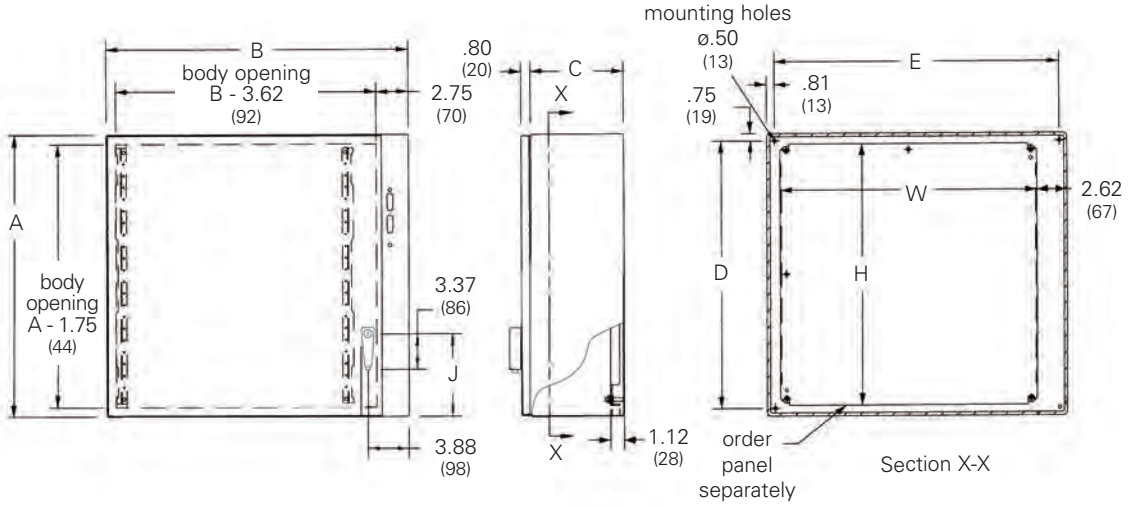

Notes: Dimensions are in inches. Millimeters shown are for reference only. Data subject to change without notice.

Wall-Mount Enclosures

Disconnect Ordering Information
Allen-Bradley †

1494V or 1494U Disconnect Mechanism

Allen-Bradley † Mechanism for Switches	Amp	Fuse Clip Rating		Fuse Class	A		B		C (when enclosure depth is:) 8		10		12		16	
		Amp	Volt		in.	mm	in.	mm	in.	mm	in.	mm	in.	mm	in.	mm
DS30	30A	(non)	(non)	—	5.75	146	6.37	162	2.87	73	5.25	133	9.75	248	9.75	248
DS30	30A	30A	250V	H,K,R	7.12	181	6.37	162	2.87	73	5.25	133	9.75	248	9.75	248
DS30	30A	30A	600V	H,K,R	9.87	251	6.37	162	2.87	73	5.25	133	9.75	248	9.75	248
DS30	30A	30A	600V	J	7.12	181	6.37	162	2.87	73	5.25	133	9.75	248	9.75	248
DS30	30A	60A	250V	H,K	7.87	200	6.37	162	2.87	73	5.25	133	9.75	248	9.75	248
DS30	30A	60A	600V	H,K	10.37	263	6.37	162	2.87	73	5.25	133	9.75	248	9.75	248
DS30	30A	60A	600V	J	7.25	184	6.37	162	2.87	73	5.25	133	9.75	248	9.75	248
DS60	60A	(non)	(non)	—	5.87	149	6.37	162	2.75	70	5.12	130	9.62	244	9.62	244
DS60	60A	60A	250V	H,K,R	8.00	203	6.37	162	2.75	70	5.12	130	9.62	244	9.62	244
DS60	60A	60A	600V	H,K,R	10.50	267	6.37	162	2.75	70	5.12	130	9.62	244	9.62	244
DS60	60A	60A	600V	J	7.37	187	6.37	162	2.75	70	5.12	130	9.62	244	9.62	244
DS60	60A	30A	600V	H,K,R	10.00	254	6.37	162	2.75	70	5.12	130	9.62	244	9.62	244
DS60	60A	100A	250V	H,K	10.50	267	6.37	162	2.75	70	5.12	130	9.62	244	9.62	244
DS60	60A	100A	600V	H,K	12.50	318	6.37	162	2.75	70	5.12	130	9.62	244	9.62	244
DS60	60A	100A	600V	J	9.25	235	6.37	162	2.75	70	5.12	130	9.62	244	9.62	244
DS100	100A	(non)	(non)	—	8.25	210	7.62	194	*	*	3.62	92	8.12	206	8.12	206
DS100	100A	100A	250V	H,K,R	13.87	352	7.62	194	*	*	3.62	92	8.12	206	8.12	206
DS100	100A	100A	600V	H,K,R	15.87	403	7.62	194	*	*	3.62	92	8.12	206	8.12	206
DS100	100A	100A	600V	J	12.62	321	7.62	194	*	*	3.62	92	8.12	206	8.12	206
DS100	100A	200A	600V	H,K	14.75	375	7.62	194	*	*	3.62	92	8.12	206	8.12	206
DS100	100A	200A	600V	H,K	17.25	438	7.62	194	*	*	3.62	92	8.12	206	8.12	206
DS100	100A	200A	600V	J	13.37	340	7.62	194	*	*	3.62	92	8.12	206	8.12	206

Allen-Bradley † Mechanism for Circuit Breakers	Amp	Circuit Breaker Type		A		B		C (when enclosure depth is:) 8		10		12		16	
		Manufacturer	Frame(s)	in.	mm	in.	mm	in.	mm	in.	mm	in.	mm	in.	mm
M40	150A	General Electric	TED, THED, TEC	6.12	155	4.25	108	4.25	108	6.62	168	11.12	282	11.12	282
M40	150A	Westinghouse	F (series C)	5.50	140	4.25	108	4.25	108	6.62	168	11.12	282	11.12	282
M50	250A	Westinghouse	J (series C)	11.00	279	4.50	114	*	*	*	*	10.62	270	10.62	270
M60	400A	Westinghouse	K (series C)	11.00	279	5.87	149	*	*	*	*	10.50	267	10.50	267

* Do not install disconnects in this depth enclosure.

The dimensional information provided in this table is derived from information supplied by the manufacturer of the equipment to be installed. Fit and function of all equipment should be checked before and after installation to assure proper and safe operation and compliance with the applicable regulations, codes and standards.

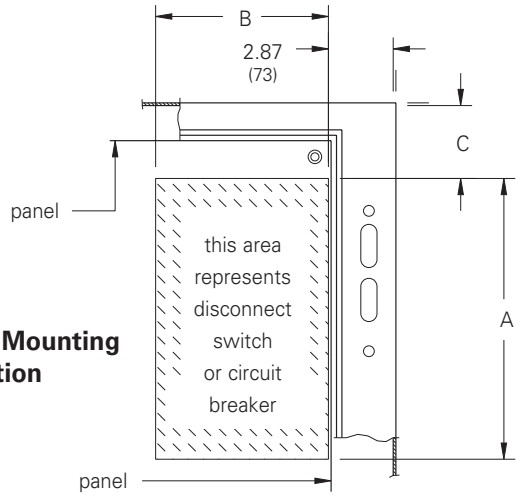

Disconnect Mounting Location

† Marks are the property of their respective owners.

Notes: Dimensions are in inches. Millimeters shown are for reference only. Data subject to change without notice.

Wall-Mount Enclosures

Disconnect Ordering Information

Cutler-Hammer †

C361 Disconnect Mechanism

Cutler-Hammer † Mechanism for Switches	Amp	Fuse Clip Rating		Fuse Class	A		B		C (when enclosure depth is:) 8		10		12		16	
		Amp	Volt		in.	mm	in.	mm	in.	mm	in.	mm	in.	mm	in.	mm
NC	30A	(non)	(non)	—	6.00	152	5.75	146	3.50	89	5.75	146	10.25	260	10.25	260
SC21	30A	30A	250V	H,K,R	9.00	229	5.75	146	3.50	89	5.75	146	10.25	260	10.25	260
SC61	30A	30A	600V	H,K,R	9.00	229	5.75	146	3.50	89	5.75	146	10.25	260	10.25	260
SC61	30A	30A	600V	J	9.00	229	5.75	146	3.50	89	5.75	146	10.25	260	10.25	260
SC61	30A	60A	250V	H,K,R	9.50	241	5.75	146	3.50	89	5.75	146	10.25	260	10.25	260
ND	60A	(non)	(non)	—	6.00	152	5.75	146	3.50	89	5.75	146	10.25	260	10.25	260
SD22	60A	30A	600V	J	9.00	229	5.75	146	3.50	89	5.75	146	10.25	260	10.25	260
SD22	60A	60A	250V	H,K,R	9.50	241	5.75	146	3.50	89	5.75	146	10.25	260	10.25	260
SD62	60A	60A	600V	H,K,R	9.50	241	5.75	146	3.50	89	5.75	146	10.25	260	10.25	260
SD62	60A	60A	600V	J	9.00	229	5.75	146	3.50	89	5.75	146	10.25	260	10.25	260
NE	100A	(non)	(non)	—	6.00	152	7.12	181	3.00	76	5.37	136	9.87	251	9.87	251
SE263	100A	100A	250V	H,K,R	10.62	270	7.12	181	3.00	76	5.37	136	9.87	251	9.87[1]	251
SE263	100A	100A	600V	H,K,R	10.62	270	7.12	181	3.00	76	5.37	136	9.87	251	9.87[1]	251
SE263	100A	100A	600V	J	9.37	238	7.12	181	3.00	76	5.37	136	9.87	251	9.87[1]	251
NF (2)	200A	(non)	(non)	—	16.75	425	9.75	248	*	*	*	*	8.00	203	8.00[1]	203
SF264 (2)	200A	200A	250V	H,K,R	16.75	425	9.75	248	*	*	*	*	8.00	203	8.00	203
SF264 (2)	200A	200A	600V	H,K,R	16.75	425	9.75	248	*	*	*	*	8.00	203	8.00	203
SF264 (2)	200A	200A	600V	J	16.75	425	9.75	248	*	*	*	*	8.00	203	8.00	203

C371 Disconnect Mechanism

Cutler-Hammer † Mechanism for Circuit Breakers	Amp	Circuit Breaker Type		A		B		C (when enclosure depth is:) 8		10		12		16	
in.	mm	Manufacturer in.	Frame(s) mm	in.	mm	in.	mm	in.	mm	in.	mm	in.	mm	in.	mm
C371E (1)	150A	Cutler-Hammer	HMCP,FS,FH	6.50	165	5.25	133	4.43	113	6.81	173	11.43	290	11.43[1]	290
C371F (1)	225A	Cutler-Hammer	HMCP,JS,JH,JL	11.50	292	7.75	197	*	*	6.75	171	11.25	286	11.25[1]	286
C371F (1)	400A	Cutler-Hammer	HMCP,KS,KH	10.50	267	7.75	197	*	*	*	*	10.75	273	10.75[1]	273
C371G (1)	600A	Cutler-Hammer	LS,LH	9.75	248	11.62	295	*	*	*	*	9.25	235	9.25[1]	235
C371E (1)	150A	Westinghouse	F (series C)	6.50	165	5.25	133	4.43	113	6.81	173	11.43	290	11.43[1]	290
C371F (1)	250A	Westinghouse	J (series C)	11.50	292	7.75	197	*	*	6.75	171	11.25	286	11.25[1]	286
C371F (1)	400A	Westinghouse	K (series C)	10.50	267	7.75	197	*	*	*	*	10.75	273	10.75[1]	273
C371G (1)	600A	Westinghouse	LA,LC	10.87	276	11.62	295	*	*	*	*	9.25	235	9.25[1]	235

* Do not install disconnects in this depth enclosure.

(1) Wire bending space "C" does not allow for the maximum size cable in some depth enclosures.

(2) Do not install 200A switch in enclosures less than 30 inches high.

The dimensional information provided in this table is derived from information supplied by the manufacturer of the equipment to be installed. Fit and function of all equipment should be checked before and after installation to assure proper and safe operation and compliance with the applicable regulations, codes and standards.

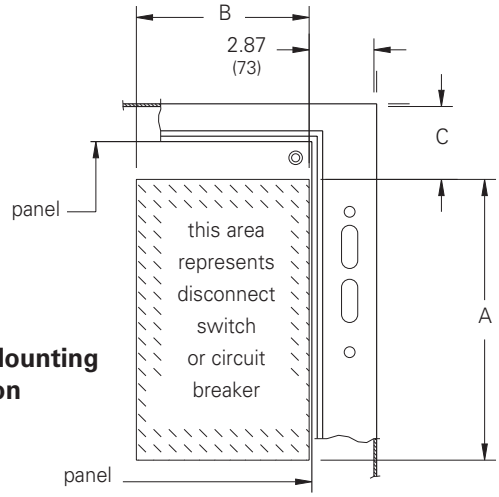

Disconnect Mounting Location

† Marks are the property of their respective owners.

Notes: Dimensions are in inches. Millimeters shown are for reference only. Data subject to change without notice.

Wall-Mount Enclosures

Disconnect Ordering Information

General Electric†

TDA Disconnect Mechanism

General Electric† Mechanism for Switches	Amp	Fuse Clip Rating		Fuse Class	A		B		C (when enclosure depth is:) 8		10		12		16	
		Amp	Volt		in.	mm	in.	mm	in.	mm	in.	mm	in.	mm	in.	mm
TDOM1A	30A	(non)	(non)	—	6.31	160	5.00	127	6.18	157	7.62	194	12.12	308	12.12	308
TDOM1A	30A	30A	250V	H,R	6.31	160	5.00	127	6.18	157	7.62	194	12.12	308	12.12	308
TDOM1B	30A	30A	600V	H,R	10.93	278	5.00	127	6.18	157	7.62	194	12.12	308	12.12	308
TDOM1B	30A	30A	250V	H,R	10.93	278	5.00	127	6.18	157	7.62	194	12.12	308	12.12	308
TDOM1B	30A	60A	600V	H,R	10.93	278	5.00	127	6.18	157	7.62	194	12.12	308	12.12	308
TDOM1A	60A	(non)	(non)	—	6.31	160	5.00	127	6.18	157	7.62	194	12.12	308	12.12	308
TDOM1B	60A	60A	250V	H,R	10.93	278	5.00	127	6.18	157	7.62	194	12.12	308	12.12	308
TDOM1B	60A	60A	600V	H,R	10.93	278	5.00	127	6.18	157	7.62	194	12.12	308	12.12	308
TDOM1B	60A	100A	250V	H,R	10.93	278	5.00	127	6.18	157	7.62	194	12.12	308	12.12	308
TDOM1B	60A	100A	600V	H,R	10.93	278	5.00	127	6.18	157	7.62	194	12.12	308	12.12	308
TDOM1A	100A	(non)	(non)	—	6.31	160	5.00	127	6.18	157	7.62	194	12.12	308	12.12	308
TDOM1B	100A	100A	250V	H,R	10.93	278	5.00	127	6.18	157	7.62	194	12.12	308	12.12	308
TDOM1B	100A	100A	600V	H,R	10.93	278	5.00	127	6.18	157	7.62	194	12.12	308	12.12	308
TDOM1B	100A	200A	250V	H,R	10.93	278	5.00	127	6.18	157	7.62	194	12.12	308	12.12	308
TDOM1B	100A	200A	600V	H,R	10.93	278	5.00	127	6.18	157	7.62	194	12.12	308	12.12	308
TDOM2	200A	(non)	(non)	—	9.12	232	8.87	225	*	*	*	*	9.50	241	9.50	241
TDOM2	200A	200A	250V	H,R	17.50	445	8.87	225	*	*	*	*	9.50	241	9.50	241
TDOM2	200A	200A	600V	H,R	17.50	445	8.87	225	*	*	*	*	9.50	241	9.50	241

General Electric† Mechanism for Circuit Breakers	Amp	Circuit Breaker Type	A		B		C (when enclosure depth is:) 8		10		12		16	
			in.	mm	in.	mm	in.	mm	in.	mm	in.	mm	in.	mm
TDOM1A	150A	TEB,TEC,TED,THED	6.43	163	5.00	127	6.06	154	7.50	191	12.06	306	12.06	306
TDOM1B	150A	TBI,TEC,TECL	11.06	281	5.00	127	6.06	154	7.50	191	12.06	306	12.06	306
TDOM1C	150A	TEL	6.43	163	5.00	127	6.06	154	7.50	191	12.06	306	12.06	306
TDOM1D	150A	THLCI	9.75	248	5.00	127	*	*	5.12	130	9.62	244	9.62	244
TDOM3	225A	TFJ,TFK,THFK,TFL	11.43	290	5.50	127	*	*	6.06	154	10.62	270	10.62	270
TDOM4	400A	TJJ,TJK4,THJK4,TJL4V	10.25	260	9.12	232	*	*	5.12	130	9.68	246	9.68	246
TDOM4	600A	TJK6,THJK6,TJ4V,TJL4V	10.25	260	9.12	232	*	*	5.12	130	9.68	246	9.68	246
TDOM5	400A	TB4,TJH6S	16.25	413	9.12	232	*	*	5.12	130	9.68	246	9.68	246
TDOM6	225A	TLB2,THLC2	14.25	362	9.12	232	*	*	*	*	9.12	232	9.12	232
TDOM6	400A	TLB4,THLC4	15.62	397	9.12	232	*	*	*	*	7.75	197	7.75	197

* Do not install disconnects in this depth enclosure.

The dimensional information provided in this table is derived from information supplied by the manufacturer of the equipment to be installed. Fit and function of all equipment should be checked before and after installation to assure proper and safe operation and compliance with the applicable regulations, codes and standards.

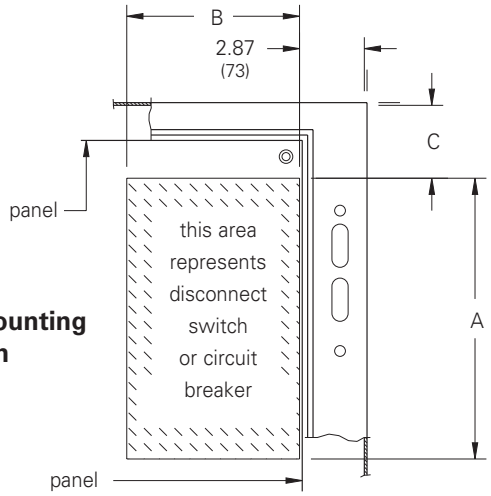

Disconnect Mounting Location

† Marks are the property of their respective owners.

Notes: Dimensions are in inches. Millimeters shown are for reference only. Data subject to change without notice.

Wall-Mount Enclosures

Disconnect Ordering Information

I-T-E Siemens® †

MAX-FLEX Disconnect Mechanism

Encl. Depth	I-T-E † Mechanism for Circuit Breaker	Cable Length	Amp	Circuit Breaker Frame	A[1] device in.	A device mm	A nominal in.	A nominal mm	A min in.	A min mm	A max in.	A max mm	B[2] device in.	B device mm	B max in.	B max mm
8	FHOE036	36	125A	ED,HED,ED6ETI	6.37	162	10.12	257	1.25	32	21.00	533	3.00	76	14.50	368
	FHOE036	36	125A	CED6ETI	8.50	216	13.25	337	4.50	114	24.25	616	3.00	76	14.50	368
	FHOF036	36	250A	FD,HFD,FXD,FXDETI	9.50	241	10.37	263	1.00	25	21.25	540	4.50	114	13.00	330
	FHOF036	36	250A	CFD,CFDETI	14.12	359	15.00	381	3.12	79	21.25	540	4.50	114	13.00	330
	FHOJ036	36	400A	JD,HJD,JXD2,JXD6	11.00	279	10.00	254	1.12	28	20.87	530	7.50	191	14.50	368
	FHOJ036	36	400A	SJD,SHJD,JXD6ETI	11.00	279	10.00	254	1.12	28	20.87	530	7.50	191	14.50	368
	FHOJ036	36	400A	CJD,SCJD,CJD6ETI	17.87	454	16.87	428	6.75	171	26.50	673	7.50	191	14.50	368
	FHOJ036	36	600A	LD,LXD,HLD	11.00	279	10.00	254	1.12	28	20.87	530	7.50	191	14.50	368
	FHOJ036	36	600A	SLD,SHLD,LXD6ETI	11.00	279	10.00	254	1.12	28	20.87	530	7.50	191	14.50	368
	FHOJ036	36	600A	CLD,SCLD,CLD6ETI	17.87	454	16.87	428	6.75	171	26.50	673	7.50	191	14.50	368
10	FHOE036	36	125A	ED,HED,ED6ETI	6.37	162	12.50	318	2.62	67	22.87	581	3.00	76	14.25	362
	FHOE036	36	125A	CED6ETI	8.50	216	16.62	422	5.87	149	26.12	663	3.00	76	14.25	362
	FHOF036	36	250A	FD,HFD,FXD,FXDETI	9.50	241	12.75	324	2.87	73	23.12	587	4.50	114	12.75	324
	FHOF036	36	250A	CFD,CFDETI	14.12	359	17.37	441	5.50	140	28.00	711	4.50	114	12.75	324
	FHOJ036	36	400A	JD,HJD,JXD2,JXD6	11.00	279	12.37	314	2.50	64	22.75	578	7.50	191	14.25	362
	FHOJ036	36	400A	SJD,SHJD,JXD6ETI	11.00	279	12.37	314	2.50	64	22.75	578	7.50	191	14.25	362
	FHOJ036	36	400A	CJD,SCJD,CJD6ETI	17.87	454	19.25	489	9.37	238	29.62	160	7.50	191	14.25	362
	FHOJ036	36	600A	LD,LXD,HLD	11.00	279	12.37	314	2.50	64	22.75	578	7.50	191	14.25	362
	FHOJ036	36	600A	SLD,SHLD,LXD6ETI	11.00	279	12.37	314	2.50	64	22.75	578	7.50	191	14.25	362
	FHOJ036	36	600A	CLD,SCLD,CLD6ETI	17.87	454	19.25	489	9.37	238	29.62	160	7.50	191	14.25	362
12	FHOE036	36	125A	ED,HED,ED6ETI	6.37	162	17.00	432	6.37	162	27.50	699	3.00	76	13.75	349
	FHOE036	36	125A	CED6ETI	8.50	216	19.87	505	9.62	244	30.37	771	3.00	76	13.75	349
	FHOF036	36	250A	FD,HFD,FXD,FXDETI	9.50	241	17.25	438	6.62	168	27.37	695	4.50	114	12.25	311
	FHOF036	36	250A	CFD,CFDETI	14.12	359	21.87	555	11.37	289	32.12	816	4.50	114	12.25	311
	FHOJ036	36	400A	JD,HJD,JXD2,JXD6	11.00	279	16.87	428	6.25	159	26.87	682	7.50	191	13.75	349
	FHOJ036	36	400A	SJD,SHJD,JXD6ETI	11.00	279	16.87	428	6.25	159	26.87	682	7.50	191	13.75	349
	FHOJ036	36	400A	CJD,SCJD,CJD6ETI	17.87	454	23.75	603	13.12	333	33.87	860	7.50	191	13.75	349
	FHOJ036	36	600A	LD,LXD,HLD	11.00	279	16.87	428	6.25	159	26.87	682	7.50	191	13.75	349
	FHOJ036	36	600A	SLD,SHLD,LXD6ETI	11.00	279	16.87	428	6.25	159	26.87	682	7.50	191	13.75	349
	FHOJ036	36	600A	CLD,SCLD,CLD6ETI	17.87	454	23.75	603	13.12	333	33.87	860	7.50	191	13.75	349
16	FHOE036	36	125A	ED,HED,ED6ETI	6.37	162	17.00	432	7.75	197	26.50	673	3.00	76	11.50	292
	FHOE036	36	125A	CED6ETI	8.50	216	19.87	505	11.12	282	29.87	759	3.00	76	11.50	292
	FHOF036	36	250A	FD,HFD,FXD,FXDETI	9.50	241	17.25	438	8.12	206	26.87	682	4.50	114	10.00	254
	FHOF036	36	250A	CFD,CFDETI	14.12	359	21.87	555	13.00	330	31.62	803	4.50	114	10.00	254
	FHOJ036	36	400A	JD,HJD,JXD2,JXD6	11.00	279	16.87	428	7.62	194	26.37	670	7.50	191	11.50	292
	FHOJ036	36	400A	SJD,SHJD,JXD6ETI	11.00	279	16.87	428	7.62	194	26.37	670	7.50	191	11.50	292
	FHOJ036	36	400A	CJD,SCJD,CJD6ETI	17.87	454	23.75	603	14.62	371	33.37	848	7.50	191	11.50	292
	FHOJ036	36	600A	LD,LXD,HLD	11.00	279	16.87	428	7.62	194	26.37	670	7.50	191	11.50	292
	FHOJ036	36	600A	SLD,SHLD,LXD6ETI	11.00	279	16.87	428	7.62	194	26.37	670	7.50	191	11.50	292
	FHOJ036	36	600A	CLD,SCLD,CLD6ETI	17.87	454	23.75	603	14.62	371	33.37	848	7.50	191	11.50	292

(1) Flexible operating cable allows disconnect to be mounted within minimum and maximum of "A" dimension when "B" is min. (2.87).

(2) Flexible operating cable allows disconnect to be mounted within minimum, (2.87) and maximum of "B" dimension when "A" is nominal.

The dimensional information provided in this table is derived from information supplied by the manufacturer of the equipment to be installed. Fit and function of all equipment should be checked before and after installation to assure proper and safe operation and compliance with the applicable regulations, codes and standards.

† Marks are the property of their respective owners.

Disconnect Mounting Location

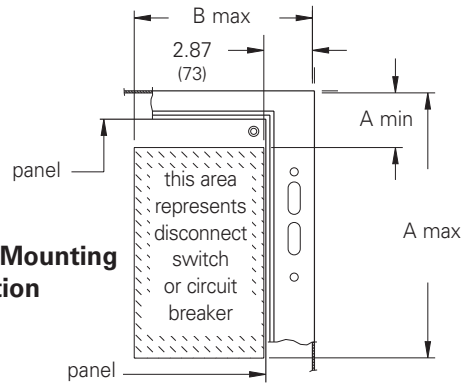

Notes: Dimensions are in inches. Millimeters shown are for reference only. Data subject to change without notice.

Wall-Mount Enclosures

Disconnect Ordering Information

Square D® †

9422 Disconnect Mechanism

Square D† Mechanism for Switches	Amp	Fuse Clip Rating		Fuse Class	A		B		C (when enclosure depth is:) 8		10		12		16	
		Amp	Volt		in.	mm	in.	mm	in.	mm	in.	mm	in.	mm	in.	mm
RC-1	30A	(non)	(non)	—	3.37	86	6.87	174	4.62	117	7.00	178	11.50	292	11.50	292
RC-2	30A	30A	250V	H,K,R	5.12	130	6.87	174	4.62	117	7.00	178	11.50	22	11.50	292
RC-3	30A	30A	600V	H,K,R	8.12	206	6.87	174	4.62	117	7.00	178	11.50	292	11.50	292
RC-3	30A	30A	600V	J	5.12	130	6.87	174	4.62	117	7.00	178	11.50	292	11.50	292
RC-3	30A	60A	250V	H,K,R	6.12	155	6.87	174	4.62	117	7.00	178	11.50	292	11.50	292
TC-1	30A	(non)	(non)	—	7.75	197	5.75	146	3.12	79	5.12	130	10.50	267	10.50	267
TC-2	30A	30A	250V	H,K,R	7.75	197	5.75	146	3.12	79	5.12	130	10.50	267	10.50	267
TC-3	30A	30A	600V	H,K,R	7.75	197	5.75	146	3.12	79	5.12	130	10.50	267	10.50	267
TC-3	30A	30A	600V	J	7.75	197	5.75	146	3.12	79	5.12	130	10.50	267	10.50	267
TC-3	30A	60A	250V	H,K,R	7.75	197	5.75	146	3.12	79	5.12	130	10.50	267	10.50	267
TD-1	60A	(non)	(non)	—	9.50	241	6.37	162	3.62	92	6.00	152	10.50	267	10.50	267
TD-2	60A	30A	600V	H,K,R	9.50	241	6.37	162	3.62	92	6.00	152	10.50	267	10.50	267
TD-2	60A	60A	250V	H,K,R	7.62	194	6.37	162	3.62	92	6.00	152	10.50	267	10.50	267
TD-3	60A	60A	600V	H,K,R	10.12	257	6.37	162	3.62	92	6.00	152	10.50	267	10.50	267
TD-3	60A	60A	600V	J	7.62	194	6.37	162	3.62	92	6.00	152	10.50	267	10.50	267
TE-1	100A	(non)	(non)	—	6.12	155	8.12	206	*	*	5.75	146	10.25	260	10.25	260
TE-2	100A	100A	250V	H,K,R	8.87	225	8.12	206	*	*	5.75	146	10.25	260	10.25	260
TE-2	100A	100A	600V	H,K,R	10.87	276	8.12	206	*	*	5.75	146	10.25	260	10.25	260
TE-2	100A	100A	600V	J	7.62	194	8.12	206	*	*	5.75	146	10.25	260	10.25	260
TE-3	100A	200A	600V	J	15.12	384	8.12	206	*	*	5.75	146	10.25	260	10.25	260
TF-1	200A	(non)	(non)	—	8.25	210	11.37	289	*	*	*	*	8.87	225	8.87	225
TF-2	200A	200A	250V	H,K,R	14.25	362	11.37	289	*	*	*	*	8.87	225	8.87	225
TF-2	200A	200A	600V	H,K,R	16.75	425	11.37	289	*	*	*	*	8.87	225	8.87	225
TF-2	200A	200A	600V	J	12.87	327	11.37	289	*	*	*	*	8.87	225	8.87	225
TF-3	200A	400A	600V	J	17.25	438	11.37	289	*	*	*	*	8.87	225	8.87	225

Square D† Mechanism for Circuit Breakers	Amp	Circuit Breaker Type	A		B		C (when enclosure depth is:) 8		10		12		16	
			in.	mm	in.	mm	in.	mm	in.	mm	in.	mm	in.	mm
RN-1	100A	FAL,FHL,FCL	6.12	155	4.25	108	3.75	95	6.12	155	10.62	270	10.62	270
RP-1	250A	KAL,KHL,KCL	7.37	187	4.25	108	*	*	6.87	174	11.37	289	11.37	289
RR-1	400A	LAL,LHL,Q4L	12.25	311	4.50	114	*	*	*	*	7.00	178	7.00	178
RR-2	400A	ILL	11.12	282	5.87	149	*	*	*	*	11.37	289	11.37	289

* Do not install disconnects in this depth enclosure.

The dimensional information provided in this table is derived from information supplied by the manufacturer of the equipment to be installed. Fit and function of all equipment should be checked before and after installation to assure proper and safe operation and compliance with the applicable regulations, codes and standards.

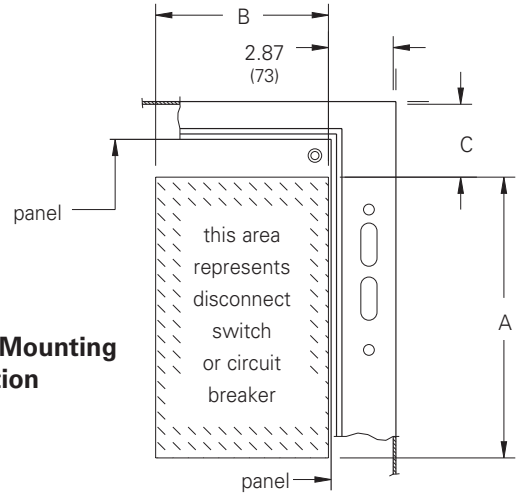

Disconnect Mounting Location

† Marks are the property of their respective owners.

Notes: Dimensions are in inches. Millimeters shown are for reference only. Data subject to change without notice.

Wall-Mount Enclosures
Disconnect Ordering Information

ALLEN-BRADLEY †
Standard enclosure designed to accept variable depth type 1494V / 1494U.

Allen-Bradley† 1494V / 1494U disconnect switch:

1. Disconnect switch and operating mechanism.
2. Operating handle.
3. Trailer fuse block kit, (if required).
4. Fuse clip kit, (if required).
5. Line and load connectors, (if necessary).
6. Door hardware: 2-pt latching mechanism or 3-pt latching mechanism.

Allen-Bradley† 1494V / 1494U circuit breaker:

1. Circuit breaker.
2. Operating mechanism.
3. Operating handle.
4. Door hardware: 2-pt latching mechanism or 3-pt latching mechanism.

CUTLER-HAMMER †
Standard enclosures designed to accept variable depth types C361 and C371.

Cutler-Hammer† C361 disconnect switch:

1. Disconnect switch and operating mechanism.
2. Operating handle.
3. Door hardware: 2-pt latching mechanismor 3-pt latching mechanism.

Cutler-Hammer† C371 circuit breaker:

1. Circuit breaker.
2. Operating mechanism.
3. Operating handle.
4. Door hardware: 2-pt latching mechanism or 3-pt latching mechanism.

GENERAL ELECTRIC †
Standard enclosures designed to accept variable depth type TDA.

General Electric† TDA disconnect switch:

1. Disconnect switch (QMR, QMW) and variable depth operating mechanism.
2. Operating handle.
3. Fuse clip kit or no fuse kit, (if required).
4. Door hardware: 2-pt latching mechanism or 3-pt latching mechanism.

General Electric† TDA circuit breaker:

1. Circuit breaker.
2. Variable depth operating mechanism.
3. Operating handle.
4. Door hardware: 2-pt latching mechanism or 3-pt latching mechanism.

I-T-E SIEMENS †
Standard enclosures designed to accept MAX-FLEX type FHO.

I-T-E Siemens† MAX-FLEX† circuit breaker:

1. Circuit Breaker.
2. Operating mechanism.
3. Operating handle FHOH.
4. Line and load connectors, (if necessary).
5. Operating cable (standard 36 inch).
6. Door hardware: 2-pt latching mechanism or 3-pt latching mechanism.

SQUARE D †
Standard enclosures designed to accept variable depth type 9422.

Square D† 9422 disconnect switch:

1. Disconnect switch and operating mechanism.
2. Operating handle.
3. Door hardware: 2-pt latching mechanism or 3-pt latching mechanism.

Square D† 9422 circuit breaker:

1. Circuit breaker.
2. Operating mechanism.
3. Operating handle.
4. Door hardware: 2-pt latching mechanism or 3-pt latching mechanism.

† Marks are the property of their respective owners.

Important Note

When ordering flange-mounted disconnect equipment be sure to include all the necessary components.

1. Latching bar, latching bar bracket interlock and hardware are furnished with the enclosure.
2. Disconnects and related components are available from the manufacturer, see pages 301 - 306.

Notes: Data subject to change without notice.

Slope Top Wall-Mount Disconnect-Ready Enclosures

Data Sheet

Application

- Provides housing for electrical controls and instruments
- Intended for use in washdown applications
- Protects against circulating and windblown dust, falling dirt, dripping non-corrosive liquids, rain, splashing water, and hose-directed water
- Designed to house the following:
  1. Allen-Bradley† Bulletin 1494V or 1494U disconnect switches with flange-mounted variable depth operating mechanisms and Bulletin 1494V or 1494U flange-mounted variable depth operating mechanisms for circuit breakers.
  2. Cutler-Hammer† Type C361 flange-mounted variable depth operating mechanisms with disconnect switches and Type C371 flange-mounted variable depth operating mechanisms for circuit circuit breakers. Also Flex Shaft™ handle mechanisms for circuit breakers.
  3. General Electric† Type STDA flange handles and variable depth operating mechanisms for disconnect switches and circuit breakers. Also Spectra Flex™ cable operators for circuit breakers.
  4. ITE Max-Flex™† flange-mounted variable depth operating handle for disconnect switches and circuit breakers, as well as some fixed depth operators for disconnect switches.
  5. Square D† Class 9422 disconnect switches with flange mounted variable depth operating mechanisms and Class 9422 flange-mounted variable depth operating mechanisms or cable mechanisms for circuit breakers.
  6. ABB Controls† flange-mounted variable depth operating mechanisms for disconnect switches and circuit breakers.

Standards

- UL 508A listed, Type 4, Type 4X and Type 12
- cUL listed, Type 4, Type 4X and Type 12
- Conforms to NEMA standard for Type 4X
- Meets NSF 169 requirements

Standards

- Door and sides of body have a smooth #4 brushed finish

Accessories

- Panels
- Stand-off spacer kit
- Padlock handle kit
- Wing knob handle kit
- Mounting foot kits

Construction

- Enclosure and hardware are constructed of corrosion-resistant, food-grade 304 stainless steel
- Features a 20 degree slope top design to direct water forward to an angled trough flange to support water runoff
- Top angle trough features 1.5 degree angle toward hinge side for easy draining of water and seals with FIP gasket against a straight top edge to reduce exposed door surface
- All continuous welded seams are finished smooth
- Hardware kit provided contains grounding hardware, .312-18 flanged hex nuts for panel mounting, and sealing washers for body mounting hole

Body Construction

- Body flange trough design is formed around body opening to divert liquid contaminants away from door opening
- Ground stud provided on enclosure body and door
- .312-18 collar studs are provided for mounting optional panel
- Enclosure mounting holes in body provided for direct mounting, optional stand-off kit, or optional mounting feet

Door Construction

- Features lift off bullet hinges with door cutouts for cleaning access and to minimize contamination
- High quality stainless steel quarter-turn latches
- Doors are easily removed and interchangeable
- Seamless poured in-place gasket
- Door opens 140 degrees for easy access

Discount Schedule: C2
Subclass: TSO

Important Note

Door closing hardware, handle,latching bar, latching bar bracket interlock, hardware and instruction sheet to locate and install disconnects are furnished with enclosure.

Disconnect switch (or circuit breaker), operating handle and operating mechanism are **not** furnished with enclosure, see disconnect ordering information pages 301 - 306

Slope Top Wall-Mount Disconnect-Ready Enclosures

Illustration Sheet and Catalog Number

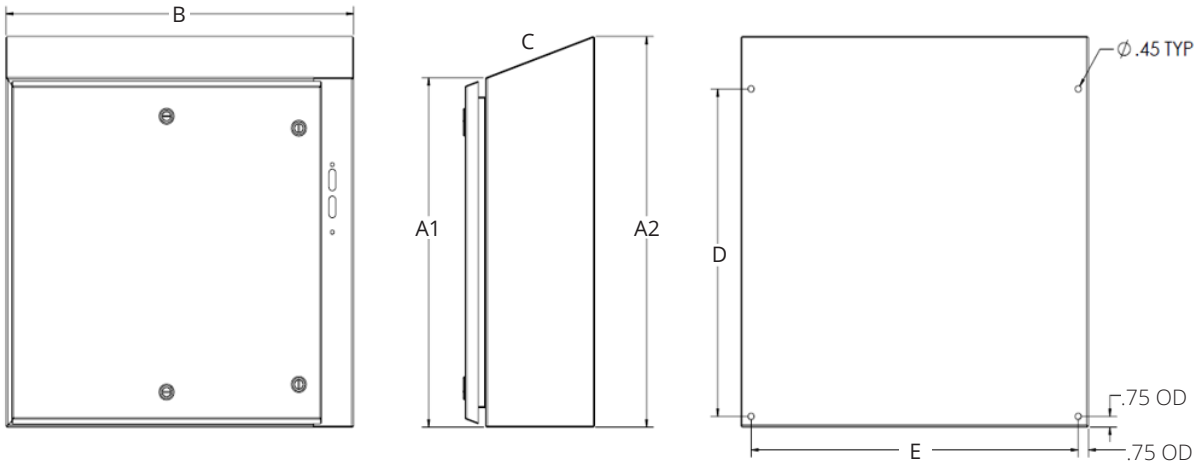

Enclosure Catalog Number	Dimensions Height x Width x Depth A1 x A2 x B x C		Size door/ body gauge	Mounting Dimensions		Latch Qty.	Panel Catalog Number	Panel Size Dimensions		Mounting Panel Holes Dimensions	
Stainless Steel	in.	mm		D x E (in.)	D x E (mm)			in.	mm	in.	mm
ES-FD24258-4XS	24.30 x 27.14 x 25.50 x 8.00	617 x 689 x 648 x 203	16 GA/14 GA	22.75 x 24.00	578 x 610	4	AW2424P	20.87 x 20.87	530 x 530	19.25 x 19.25	489 x 489
ES-FD30258-4XS	30.30 x 33.14 x 25.50 x 8.00	770 x 842 x 648 x 203	16 GA/14 GA	29.00 x 24.00	737 x 610	5	AW3024P	26.87 x 20.87	683 x 531	25.25 x 19.25	641 x 489
ES-FD36318-4XS	37.40 x 40.21 x 31.50 x 8.00	950 x 1021 x 800 x 203	14 GA/12 GA	35.75 x 30.00	908 x 762	5	ES3630P	32.87 x 26.00	835 x 660	31.25 x 24.375	794 x 619

Slope Top Wall-Mount Disconnect-Ready Enclosure Accessories

Discount Schedule: C2

Subclass: TS0

Standoff Spacer Kit

Padlock Handle Kit

Wing Knob Handle Kit

Catalog Number	Description	For use with:
ES-SO1	Standoff Spacer Kit	All slope top enclosures
ES-SO2	Standoff Spacer Kit	All slope top enclosures
ES-SO4	Standoff Spacer Kit	All slope top enclosures
ES-SO6	Standoff Spacer Kit	All slope top enclosures
ES-PLHSS	Padlock Handle Kit	All slope top enclosures
ES-PLSS	Wing Knob Handle Kit	All slope top enclosures
ES3630P	Accessory - Panel	Specific sized slope top enclosures

Ground-Mount Enclosures
Type 4/12 Center and Flange-Mount Floor-Standing with 3-Point Locking
Data Sheet

CD606012-4FD

FD606012-4FD

Application
- Houses electrical controls and instruments
- Suitable for indoor or outdoor use
- Protects against circulating and windblown dust and rain, falling dirt, splashing water, and hose-directed water

Standards
- UL 508A, Type 12, Type 4
- CSA C22.2 No.94, Type 12, Type 4
- NEMA 250, Type 12, Type 4

Finish
- Wash and phosphate undercoat
- ANSI 61 gray polyester powder finish

Accessories
- Panels
- Channel mounting hardware
- Blank adapter plates
- Operator adapters
- Leg stabilizer kit
- Touch-up paint
- Replacement handles: defeater handle BD-PDHB and keyed handle BD-PKHB (see pages 428 and 429).
- Replacement latches: T4LDLB
- See Accessories section

Construction
- Enclosure and doors are fabricated from from steel of thickness ranging from 12GA to 10GA
- All continuous welded seams are finished smooth
- Doors are secured to the body with removable concealed hinges and a center locating 3-point key-locking and padlock handle mechanism
- Additional quarter-turn latches provided at top and bottom on all enclosure doors
- Modern bevel profile on hinge side of enclosure doors
- Right-side door serves as the master door on the flange mount disconnect type with a defeater mechanism which requires a screwdriver to open
- Left-side door serves as the master door on the center post disconnect type with a defeater mechanism which requires a flat screwdriver to open
- Slave doors cannot open without activating mechanical interlock but can close in any order
- Universal opening on either the right side flange or the center post will accommodate most disconnect operators when used with operator adapters, (order separately) see page 452
- Print pocket provided
- Doors have an oil-resistant gasket
- Ground studs provided on doors and body
- Lighting mounting channel provided
- Removable center post allows for easy access and panel installation
- Heavy-gauge angle supports and .375-16 collar studs are provided for optional panel mounting
- Large lifting eyebolts are supplied
- Mounting legs are provided for floor mounting

Discount Schedule: C2
Subclass: DOC

Important Note

When ordering flange or center-mounted disconnect enclosures, be sure to include all the necessary components.

1. A flange or center-mounted enclosure
2. A panel (optional)
3. Operator adapter plates MUST be ordered for the specific brand and type of disconnect being used, (see page 452)

Disconnect switch (or circuit breaker), operating handle and operating mechanism are not furnished with enclosure, see disconnect ordering information, pages 312 - 319.

Notes: We can provide special sizes, finishes and other modifications. Consult the factory for your special requirements

Ground-Mount Enclosures
Type 4/12 Center and Flange-Mount Floor-Standing with 3-Point Locking
Catalog Number

Center-Mounted

Enclosure	Enclosure Size Height x Width x Depth A x B x C		Panel	Panel Size Height x Width	
Catalog Number	in.	mm	Catalog Number	in.	mm
CD604812-4FD	60.00 x 48.00 x 12.00	1524 x 1222 x 305	**AW6048P**	55.87 x 43.87	1419 x 1114
CD606012-4FD	60.00 x 60.00 x 12.00	1524 x 1527 x 305	**AW6060P**	55.87 x 55.87	1419 x 1419
CD726012-4FD	72.00 x 60.00 x 12.00	1829 x 1527 x 305	**AW7260P**	67.87 x 55.87	1724 x 1419
CD727212-4FD	72.00 x 72.00 x 12.00	1829 x 1832 x 305	**AW7272P**	67.87 x 67.87	1724 x 1419
CD727218-4FD	72.00 x 72.00 x 18.00	1829 x 1832 x 305	**AW7272P**	67.87 x 67.87	1724 x 1724

Flange-Mounted

Enclosure	Enclosure Size Height x Width x Depth A x B x C		Panel	Panel Size Height x Width	
Catalog Number	in.	mm	Catalog Number	in.	mm
FD604912-4FD	60.00 x 49.00 x 12.00	1524 x 1245 x 305	**AW6048P**	55.87 x 43.87	1419 x 1114
FD606112-4FD	60.00 x 61.00 x 12.00	1524 x 1549 x 305	**AW6060P**	55.87 x 55.87	1419 x 1419
FD726112-4FD	72.00 x 61.00 x 12.00	1829 x 1549 x 305	**AW7260P**	67.87 x 55.87	1724 x 1419
FD727312-4FD	72.00 x 73.00 x 12.00	1829 x 1854 x 305	**AW7272P**	67.87 x 67.87	1724 x 1724
FD604918-4FD	60.00 x 49.00 x 18.00	1524 x 1245 x 457	**AW6048P**	55.87 x 43.87	1419 x 1114
FD606118-4FD	60.00 x 61.00 x 18.00	1524 x 1549 x 457	**AW6060P**	55.87 x 55.87	1419 x 1419
FD726118-4FD	72.00 x 61.00 x 18.00	1829 x 1549 x 457	**AW7260P**	67.87 x 55.87	1724 x 1419
FD727318-4FD	72.00 x 73.00 x 18.00	1829 x 1854 x 457	**AW7272P**	67.87 x 67.87	1724 x 1724
FD727324-4FD	72.00 x 73.00 x 24.00	1829 x 1854 x 610	**AW7272P**	67.87 x 67.87	1724 x 1724

Notes: Dimensions are in inches. Millimeters shown are for reference only. Data subject to change without notice.

Ground-Mount Enclosures
Type 4/12 Center and Flange-Mount Floor-Standing with 3-Point Locking
Illustration Sheet

ID = Inside Dimension

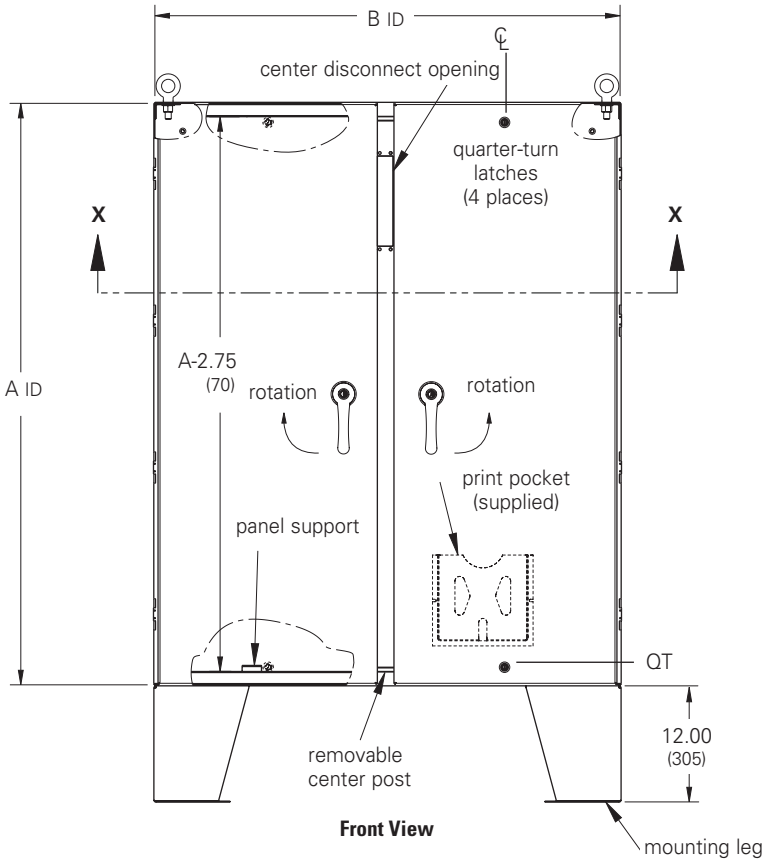

Front View

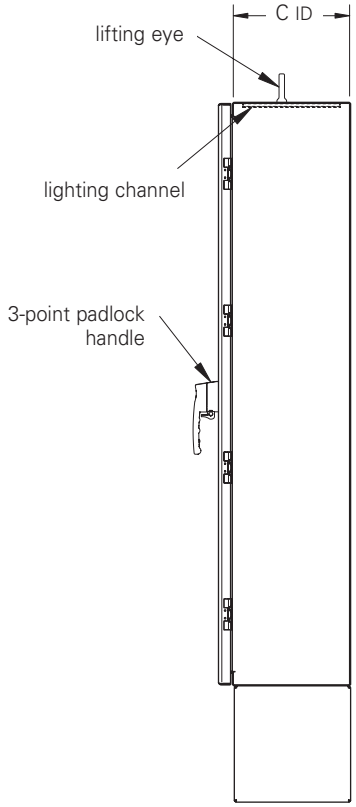

Side View

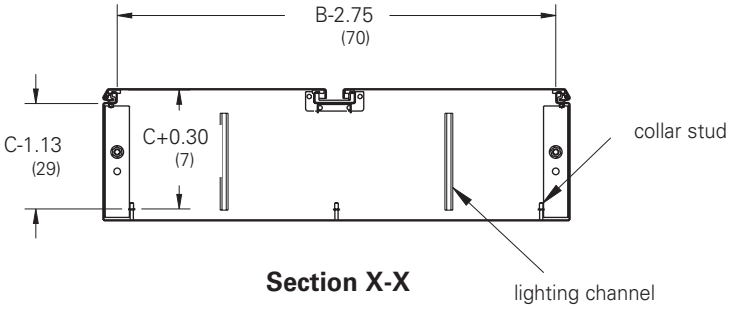

Section X-X

Notes: Dimensions are in inches. Millimeters shown are for reference only. Data subject to change without notice.

Ground-Mount Enclosures
Type 4/12 Center and Flange-Mount Floor-Standing with 3-Point Locking
Illustration Sheet

ID = Inside Dimension

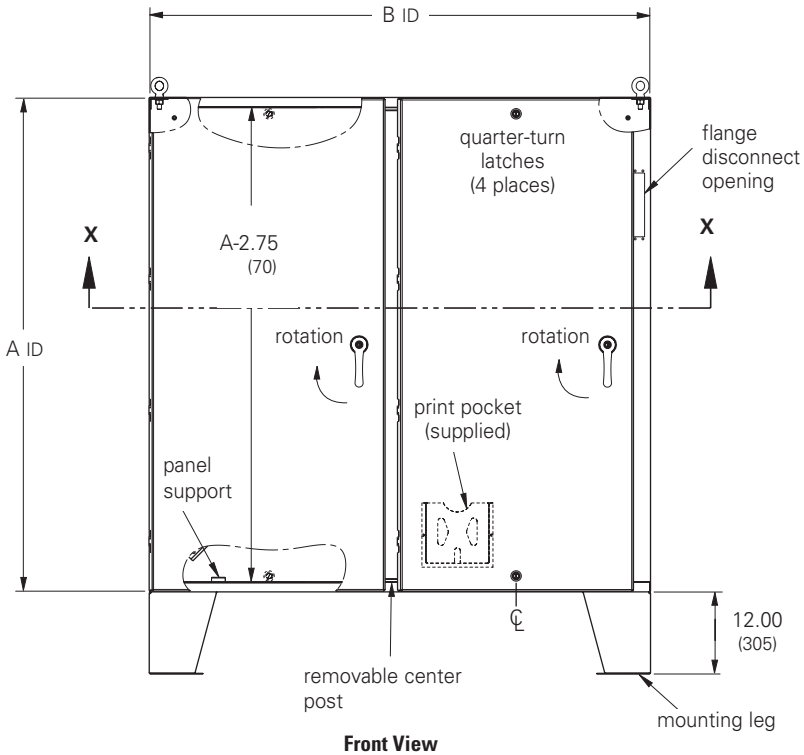

Front View

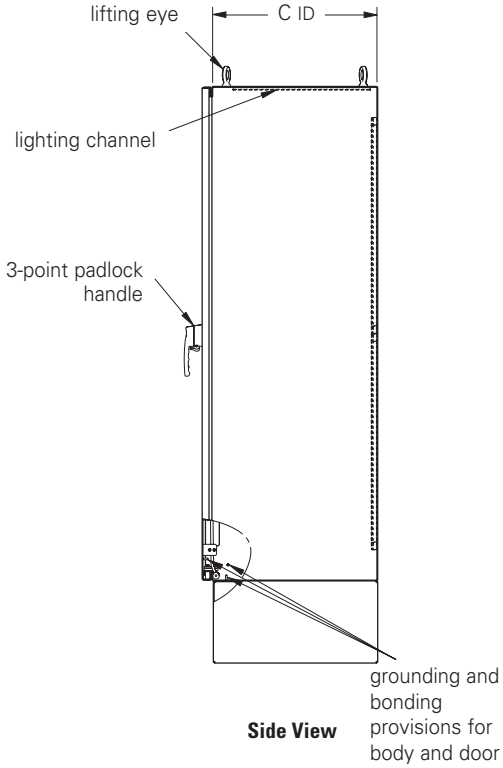

Side View

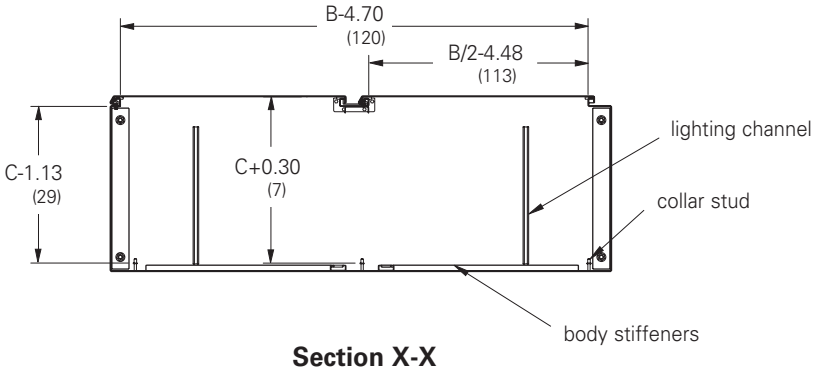

Section X-X

Notes: Dimensions are in inches. Millimeters shown are for reference only. Data subject to change without notice.
Two lifting eyes are furnished when C dimension is 24" (610 mm) or less.

Ground-Mount Enclosures
Type 4X/12 Center and Flange-Mount Floor-Standing with 3-Point Locking
Data Sheet

CD606012-4XSFD

FD606012-4XSFD

Application
- Houses electrical controls and instruments
- Intended for indoor or outdoor use where a corrosive environment exists
- Protects against corrosion, circulating and windblown dust and rain, falling dirt, splashing water and hose directed water

Standards
- UL 508A, Type 12, Type 4X
- CSA C22.2 No.94, Type 12, Type 4X
- NEMA 250, Type 12, and Type 4X

Finish
- Doors and sides have a smooth #4 brushed finish

Accessories
- Panels
- Channel mounting hardware
- Blank adapter plates
- Operator adapters
- Leg stabilizer kit
- Touch-up paint
- Replacement handles: defeater handle BD-PDHB and keyed handle BD-PKHB (see pages 427 and 428).
- Replacement latches: T4LDLB
- See Accessories section

Construction
- Enclosure and doors are fabricated from 304 stainless steel of thickness ranging from 12GA to 10GA
- All continuous welded seams are finished smooth
- Doors are secured to the body with removable concealed hinges and a center locating 3-point key-locking and padlock handle mechanism
- Additional quarter-turn latches provided at top and bottom on all enclosure doors
- Modern bevel profile on hinge side of enclosure doors
- Right-side door serves as the master door on the flange mount disconnect type with a defeater mechanism which requires a screwdriver to open
- Left-side door serves as the master door on the center post disconnect type with a defeater mechanism which requires a flat screwdriver to open
- Slave doors cannot open without activating mechanical interlock but can close in any order
- Universal opening on either the right side flange or the center post will accommodate most disconnect operators when used with operator adapters, (order separately) see page 452
- Print pocket provided
- Doors have an oil-resistant gasket
- Ground studs provided on doors and body
- Lighting mounting channel provided
- Removable center post allows for easy access and panel installation
- Heavy-gauge angle supports and .375-16 collar studs are provided for optional panel mounting
- Large lifting eyebolts are supplied
- Mounting legs are provided for floor mounting

Discount Schedule: C2

Subclass: DOD

Important Note

When ordering flange or center-mounted disconnect enclosures, be sure to include all the necessary components.

1. A flange or center-mounted enclosure
2. A panel (optional)
3. Operator adapter plates MUST be ordered for the specific brand and type of disconnect being used, (see page 452)

Disconnect switch (or circuit breaker), operating handle and operating mechanism are not furnished with enclosure, see disconnect ordering information, pages 312 - 319.

Notes: We can provide special sizes, finishes and other modifications. Consult the factory for your special requirements

Ground-Mount Enclosures
Type 4X/12 Center and Flange-Mount Floor-Standing with 3-Point Locking
Catalog Number

Center-Mounted

Enclosure	Enclosure Size Height x Width x Depth		Panel	Panel Size	
	A x B x C			Height x Width	
Catalog Number	in.	mm	Catalog Number	in.	mm
CD604812-4XSFD	60.00 x 48.00 x 12.00	1524 x 1222 x 305	**AW6048P**	55.87 x 43.87	1419 x 1114
CD606012-4XSFD	60.00 x 60.00 x 12.00	1524 x 1527 x 305	**AW6060P**	55.87 x 55.87	1419 x 1419
CD726012-4XSFD	72.00 x 60.00 x 12.00	1829 x 1527 x 305	**AW7260P**	67.87 x 55.87	1724 x 1419
CD727212-4XSFD	72.00 x 72.00 x 12.00	1829 x 1832 x 305	**AW7272P**	67.87 x 67.87	1724 x 1419
CD727218-4XSFD	72.00 x 72.00 x 18.00	1829 x 1832 x 305	**AW7272P**	67.87 x 67.87	1724 x 1724

Flange-Mounted

Enclosure	Enclosure Size Height x Width x Depth		Panel	Panel Size	
	A x B x C			Height x Width	
Catalog Number	in.	mm	Catalog Number	in.	mm
FD604912-4XSFD	60.00 x 49.00 x 12.00	1524 x 1245 x 305	**AW6048P**	55.87 x 43.87	1419 x 1114
FD606112-4XSFD	60.00 x 61.00 x 12.00	1524 x 1549 x 305	**AW6060P**	55.87 x 55.87	1419 x 1419
FD726112-4XSFD	72.00 x 61.00 x 12.00	1829 x 1549 x 305	**AW7260P**	67.87 x 55.87	1724 x 1419
FD727312-4XSFD	72.00 x 73.00 x 12.00	1829 x 1854 x 305	**AW7272P**	67.87 x 67.87	1724 x 1724
FD604918-4XSFD	60.00 x 49.00 x 18.00	1524 x 1245 x 457	**AW6048P**	55.87 x 43.87	1419 x 1114
FD606118-4XSFD	60.00 x 61.00 x 18.00	1524 x 1549 x 457	**AW6060P**	55.87 x 55.87	1419 x 1419
FD726118-4XSFD	72.00 x 61.00 x 18.00	1829 x 1549 x 457	**AW7260P**	67.87 x 55.87	1724 x 1419
FD727318-4XSFD	72.00 x 73.00 x 18.00	1829 x 1854 x 457	**AW7272P**	67.87 x 67.87	1724 x 1724
FD727324-4XSFD	72.00 x 73.00 x 24.00	1829 x 1854 x 610	**AW7272P**	67.87 x 67.87	1724 x 1724

Notes: Dimensions are in inches. Millimeters shown are for reference only. Data subject to change without notice.

Ground-Mount Enclosures
Type 4X/12 Center and Flange-Mount Floor-Standing with 3-Point Locking
Illustration Sheet

ID = Inside Dimension

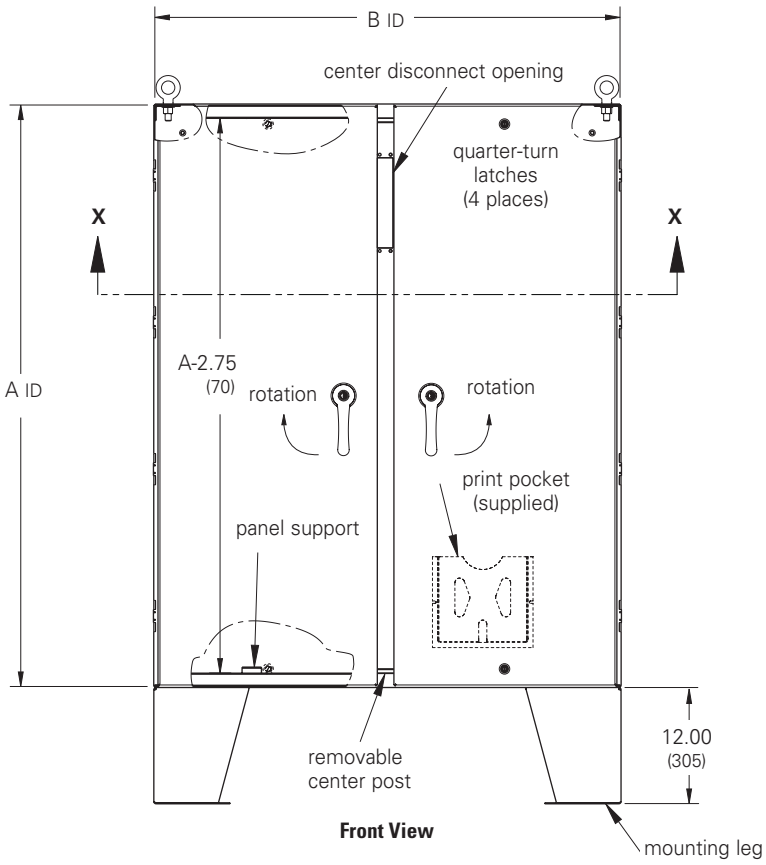

Front View

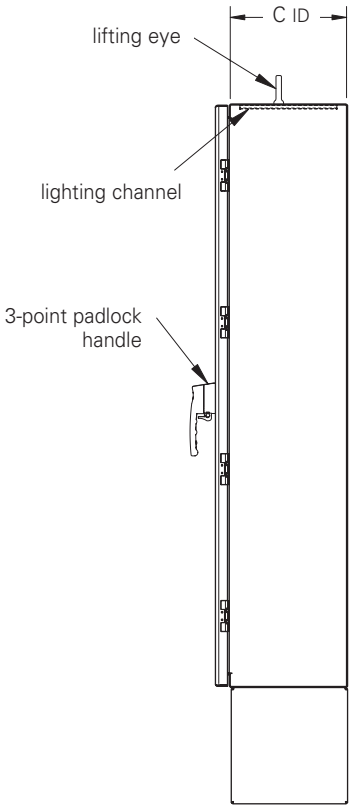

Side View

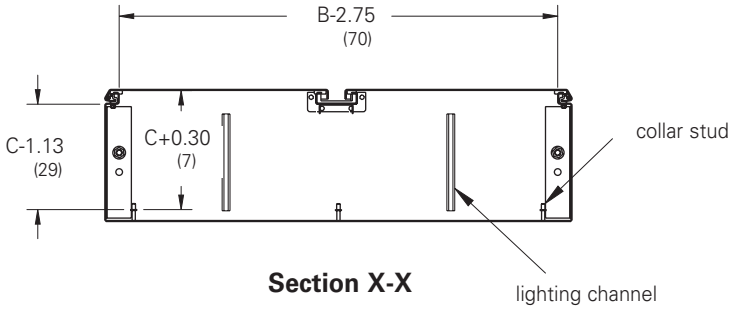

Section X-X

Notes: Dimensions are in inches. Millimeters shown are for reference only. Data subject to change without notice.
Two lifting eyes are furnished when C dimension is 24" (610 mm) or less.

Ground-Mount Enclosures
Type 4X/12 Center and Flange-Mount Floor-Standing with 3-Point Locking
Illustration Sheet

ID = Inside Dimension

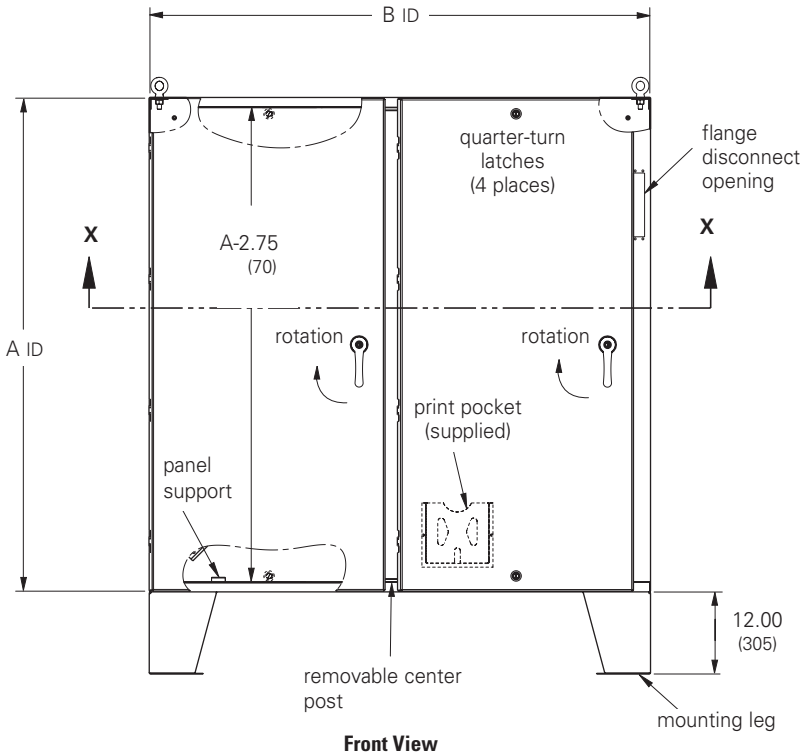

Front View

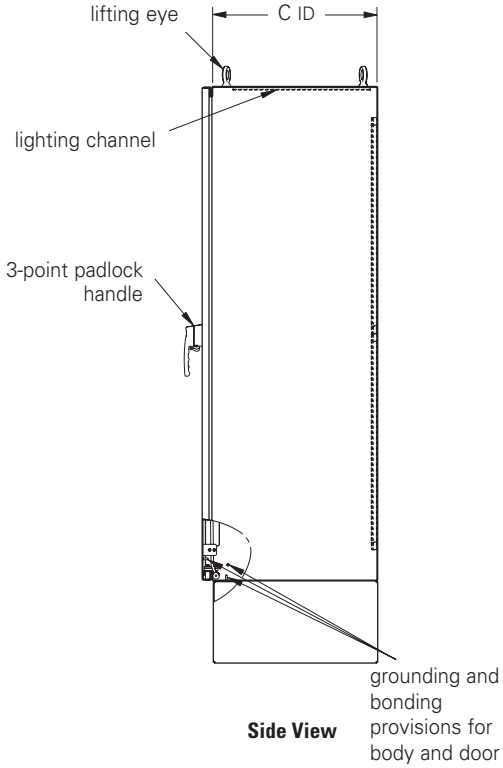

Side View

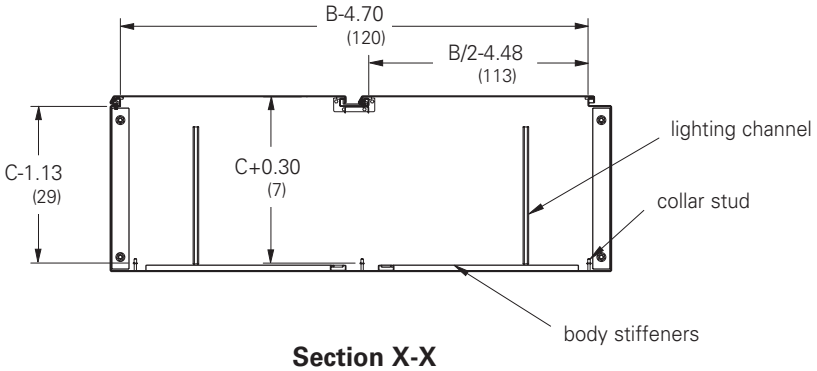

Section X-X

Notes: Dimensions are in inches. Millimeters shown are for reference only. Data subject to change without notice.
Two lifting eyes are furnished when C dimension is 24" (610 mm) or less.

Ground-Mount Enclosures
Type 4 and 4X Center and Flange-Mount Floor-Standing with 3-Point Locking
Illustration Sheet

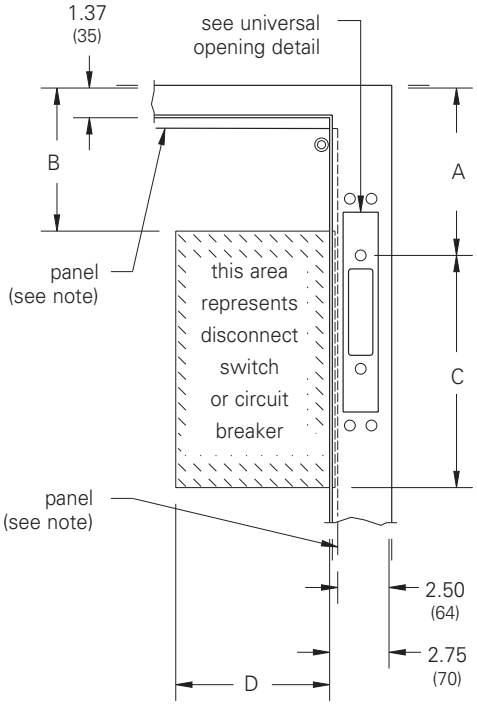

Flange Mounting

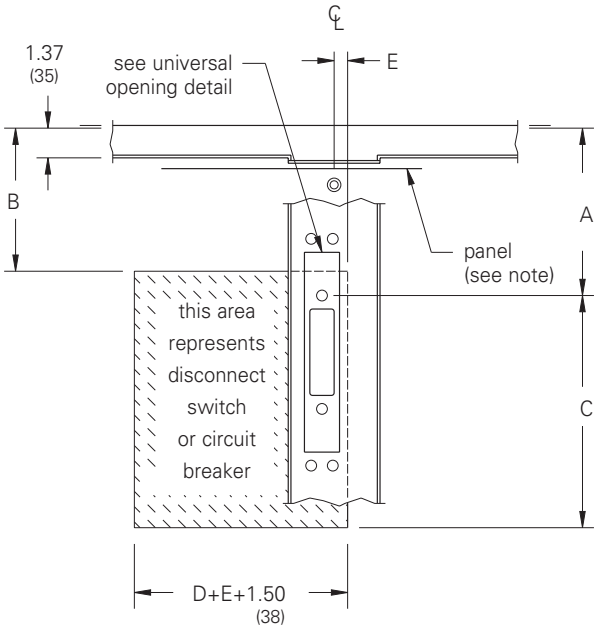

Center Post Mounting

The dimensional information provided in these drawings is derived from information supplied by the manufacturer of the equipment to be installed. Fit and function of all equipment should be checked before and after installation to assure proper and safe operation and compliance with the applicable regulations, codes and standards.

Universal opening must be filled with an operator adapter kit for the specific brand and type of disconnect being used, (see page 451).

Important Note

When ordering flange or center-mounted disconnect enclosures, be sure to include all the necessary components.

1. A flange or center-mounted enclosure
2. A panel (optional)
3. Operator adapter plates MUST be ordered for the specific brand and type of disconnect being used, (see page 452)

Disconnect switch (or circuit breaker), operating handle and operating mechanism are not furnished with enclosure, see disconnect ordering information, pages 312 - 319.

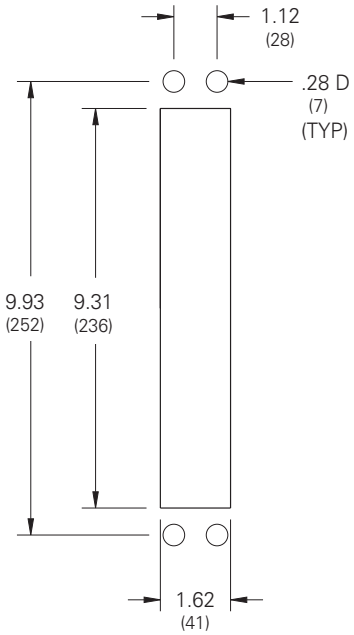

Universal Opening Detail

Notes: Refer to disconnect tables for associated dimensions. Panels are ordered separately. Refer to catalog table for size and ordering information. Dimensions are in inches. Millimeters shown are for reference only. Data subject to change without notice.

Floor-Standing Enclosures

Disconnect Ordering Information

Allen-Bradley® †

1494V or 1494U Disconnect Mechanism

Allen-Bradley† Mechanism for Switches	Amp	Fuse Clip Rating		Fuse Class	Enclosure Height								C		D(1)		E	
					60				72									
					A		B		A		B							
		Amp	Volt		in.	mm	in.	mm	in.	mm	in.	mm	in.	mm	in.	mm	in	mm
DS30	30A	(non)	(non)	—	7.87	200	6.00	152	13.37	340	11.50	292	4.00	102	6.75	171	.25	6
DS30	30A	30A	250V	H,K,R	7.87	200	6.00	152	13.37	340	11.50	292	5.25	133	6.75	171	.25	6
DS30	30A	30A	600V	H,K,R	7.87	200	6.00	152	13.37	340	11.50	292	8.00	203	6.75	171	.25	6
DS30	30A	30A	600V	J	7.87	200	6.00	152	13.37	340	11.50	292	5.25	133	6.75	171	.25	6
DS30	30A	60A	250V	H,K	7.87	200	6.00	152	13.37	340	11.50	292	6.00	152	6.75	171	.25	6
DS30	30A	60A	600V	H,K	7.87	200	6.00	152	13.37	340	11.50	292	8.50	216	6.75	171	.25	6
DS30	30A	60A	600V	J	7.87	200	6.00	152	13.37	340	11.50	292	5.50	140	6.75	171	.25	6
DS60	60A	(non)	(non)	—	7.87	200	5.87	149	13.37	340	11.37	289	4.00	102	6.75	171	.25	6
DS60	60A	30A	600V	H,K,R	7.87	200	5.87	149	13.37	340	11.37	289	8.00	203	6.75	171	.25	6
DS60	60A	60A	250V	H,K,R	7.87	200	5.87	149	13.37	340	11.37	289	6.00	152	6.75	171	.25	6
DS60	60A	60A	600V	H,K,R	7.87	200	5.87	149	13.37	340	11.37	289	8.50	216	6.75	171	.25	6
DS60	60A	60A	600V	J	7.87	200	5.87	149	13.37	340	11.37	289	5.50	140	6.75	171	.25	6
DS60	60A	100A	250V	H,K	7.87	200	5.87	149	13.37	340	11.37	289	8.50	216	6.75	171	.25	6
DS60	60A	100A	600V	H,K	7.87	200	5.87	149	13.37	340	11.37	289	10.50	267	6.75	171	.25	6
DS60	60A	100A	600V	J	7.87	200	5.87	149	13.37	340	11.37	289	7.25	184	6.75	171	.25	6
DS100	100A	(non)	(non)	—	7.87	200	4.37	111	13.37	340	9.87	251	4.75	121	8.00	203	.25	6
DS100	100A	100A	250V	H,K,R	7.87	200	4.37	111	13.37	340	9.87	251	10.50	267	8.00	203	.25	6
DS100	100A	100A	600V	H,K,R	7.87	200	4.37	111	13.37	340	9.87	251	12.50	318	8.00	203	.25	6
DS100	100A	100A	600V	J	7.87	200	4.37	111	13.37	340	9.87	251	9.25	235	8.00	203	.25	6
DS100	100A	200A	250V	H,K	7.87	200	4.37	111	13.37	340	9.87	251	11.25	286	8.00	203	.25	6
DS100	100A	200A	600V	H,K	7.87	200	4.37	111	13.37	340	9.87	251	13.75	349	8.00	203	.25	6
DS100	100A	200A	600V	J	7.87	200	4.37	111	13.37	340	9.87	251	10.00	254	8.00	203	.25	6
DS200	200A	(non)	(non)	—	*	*	*	*	11.93	303	7.50	191	10.00	254	11.00	279	.25	6
DS200	200A	200A	250V	H,K,R	*	*	*	*	11.93	303	7.50	191	15.00	381	11.00	279	.25	6
DS200	200A	200A	600V	H,K,R	*	*	*	*	11.93	303	7.50	191	17.25	438	11.00	279	.25	6
DS200	200A	200A	600V	J	*	*	*	*	11.93	303	7.50	191	13.50	343	11.00	279	.25	6
DS200	200A	400A	250V	H,K	*	*	*	*	11.93	303	7.50	191	15.75	400	11.00	279	.25	6
DS200	200A	400A	600V	H,K	*	*	*	*	11.93	303	7.50	191	18.75	476	11.00	279	.25	6
DS200	200A	400A	600V	J	*	*	*	*	11.93	303	7.50	191	14.25	362	11.00	279	.25	6

Allen-Bradley† Mechanism for Circuit Breakers	Amp	Circuit Breaker Type		Enclosure Height								C		D(1)		E	
				60				72									
				A		B		A		B							
		Manufacturer	Frame(s)	in.	mm	in.	mm	in.	mm	in.	mm	in.	mm	in.	mm	in	mm
M40	150A	General Electric	TED,THED,TEC	7.87	200	7.25	184	13.37	340	12.75	324	5.75	146	4.75	121	.25	6
M40	150A	Westinghouse	F (series C)	7.87	200	7.25	184	13.37	340	12.75	324	5.00	127	4.75	121	.25	6
M50	250A	Westinghouse	J (series C)	7.87	200	6.87	174	13.37	340	12.37	324	9.75	248	5.00	127	.25	6
M60	400A	Westinghouse	K (series C)	*	*	*	*	13.37	340	12.37	324	9.75	248	6.25	159	.25	6

* Do not install disconnects in this height enclosure.

(1) Dimension "D" does not include space for auxiliary switches.

The dimensional information provided in this table is derived from information supplied by the manufacturer of the equipment to be installed. Fit and function of all equipment should be checked before and after installation to assure proper and safe operation and compliance with the applicable regulations, codes and standards.

† Marks are the property of their respective owners.

Notes: Dimensions are in inches. Millimeters shown are for reference only. Data subject to change without notice.

Floor-Standing Enclosures

Disconnect Ordering Information

Allen-Bradley® †

1494F Disconnect Mechanism

Allen-Bradley† Mechanism Switches	Amp	Fuse Clip Rating		Fuse Class	Enclosure Height								C		D(1)		E	
					60				72									
					A		B		A		B							
		Amp	Volt		in.	mm	in.	mm	in.	mm	in.	mm	in.	mm	in.	mm	in	mm
N30	30A	(non)	(non)	—	5.87	149	5.37	136	11.37	289	10.87	276	4.75	121	6.50	165	.75	19
NF30	30A	30A	250V	H,K,R	5.87	149	5.37	136	11.37	289	10.87	276	6.50	165	6.50	165	.75	19
NF30	30A	30A	600V	H,K,R	5.87	149	5.37	136	11.37	289	10.87	276	9.25	235	6.50	165	.75	19
NF30	30A	30A	600V	J	5.87	149	5.37	136	11.37	289	10.87	276	6.50	165	6.50	165	.75	19
NF30	30A	60A	250V	H,K,R	5.87	149	5.37	136	11.37	289	10.87	276	7.25	184	6.50	165	.75	19
NF30	30A	60A	600V	H,K,R	5.87	149	5.37	136	11.37	289	10.87	276	9.75	248	6.50	165	.75	19
NF30	30A	60A	600V	J	5.87	149	5.37	136	11.37	289	10.87	276	6.75	171	6.50	165	.75	19
N60	60A	(non)	(non)	—	5.87	149	4.62	117	11.37	289	10.12	257	4.75	121	6.50	165	.75	19
NF60	60A	30A	600V	H,K,R	5.87	149	4.62	117	11.37	289	10.12	257	10.50	267	6.50	165	.75	19
NF60	60A	60A	250V	H,K,R	5.87	149	4.62	117	11.37	289	10.12	257	8.50	216	6.50	165	.75	19
NF60	60A	60A	600V	H,K,R	5.87	149	4.62	117	11.37	289	10.12	257	11.00	279	6.50	165	.75	19
NF60	60A	60A	600V	J	5.87	149	4.62	117	11.37	289	10.12	257	7.75	197	6.50	165	.75	19
NF60	60A	100A	250V	H,K,R	5.87	149	4.62	117	11.37	289	10.12	257	11.00	279	6.50	165	.75	19
NF60	60A	100A	600V	H,K,R	5.87	149	4.62	117	11.37	289	10.12	257	13.00	330	6.50	165	.75	19
NF60	60A	100A	600V	J	5.87	149	4.62	117	11.37	289	10.12	257	9.75	248	6.50	165	.75	19
N100	100A	(non)	(non)	—	*	*	*	*	11.37	289	8.25	210	4.75	121	7.25	184	.75	19
NF100	100A	100A	250V	H,K,R	*	*	*	*	11.37	289	8.25	210	11.50	292	7.50	191	.75	19
NF100	100A	100A	600V	H,K,R	*	*	*	*	11.37	289	8.25	210	13.50	343	7.50	191	.75	19
NF100	100A	100A	600V	J	*	*	*	*	11.37	289	8.25	210	10.25	260	7.50	191	.75	19
NF100	100A	200A	250V	H,K,R	*	*	*	*	11.37	289	8.25	210	12.25	311	7.75	197	.75	19
NF100	100A	200A	600V	H,K,R	*	*	*	*	11.37	289	8.25	210	14.75	375	7.75	197	.75	19
NF100	100A	200A	600V	J	*	*	*	*	11.37	289	8.25	210	11.00	279	7.75	197	.75	19
N200	200A	(non)	(non)	—	*	*	*	*	10.06	256	6.62	210	7.25	184	10.50	267	.75	19
NF200	200A	200A	250V	H,K,R	*	*	*	*	10.06	256	6.62	168	15.00	381	10.50	267	.75	19
NF200	200A	200A	600V	H,K,R	*	*	*	*	10.06	256	6.62	168	17.50	445	10.50	267	.75	19
NF200	200A	200A	600V	J	*	*	*	*	10.06	256	6.62	168	13.75	349	10.50	267	.75	19
NF200	200A	400A	250V	H,K,R	*	*	*	*	10.06	256	6.62	168	16.50	419	11.00	279	.75	19
NF200	200A	400A	600V	H,K,R	*	*	*	*	10.06	256	6.62	168	19.50	495	11.00	279	.75	19
NF200	200A	400A	600V	J	*	*	*	*	10.06	256	6.62	168	15.00	381	11.00	279	.75	19

1494D Disconnect Mechanism

Allen-Bradley† Mechanism for Circuit Breakers	Amp	Circuit Breaker Type		Enclosure Height								C		D(1)		E	
				60				72									
				A		B		A		B							
		Manufacturer	Frame(s)	in.	mm	in.	mm	in.	mm	in.	mm	in.	mm	in.	mm	in	mm
N4/N40	150A	General Electric	TED,THED,TEC	5.87	149	5.25	133	11.37	289	10.75	273	5.87	149	4.62	117	.75	19
N5/N55	225A	General Electric	TFK,THFK,TFC	5.87	149	4.50	114	11.37	289	10.00	254	8.87	225	4.75	121	.75	19
N4/N40	150A	Westinghouse	F (series C)	5.87	149	5.25	133	11.37	289	10.75	273	5.87	149	4.62	117	.75	19
N5/N50	250A	Westinghouse	J (series C)	5.87	149	4.50	114	11.37	289	10.00	254	8.87	225	4.75	121	.75	19
N5/N60	400A	Westinghouse	K (series C)	*	*	*	*	11.37	289	10.00	254	8.87	225	5.87	149	.75	19

* Do not install disconnects in this height enclosure.
(1) Dimension "D" does not include space for auxiliary switches.

The dimensional information provided in this table is derived from information supplied by the manufacturer of the equipment to be installed. Fit and function of all equipment should be checked before and after installation to assure proper and safe operation and compliance with the applicable regulations, codes and standards.

† Marks are the property of their respective owners.

Notes: Dimensions are in inches. Millimeters shown are for reference only. Data subject to change without notice.

Floor-Standing Enclosures

Disconnect Ordering Information

Cutler-Hammer †

C361 Disconnect Mechanism

Cutler-Hammer† Mechanism Switches	Amp	Fuse Clip Rating		Fuse Class	Enclosure Height								C		D		E	
					60				72									
					A		B		A		B							
		Amp	Volt		in.	mm	in.	mm	in.	mm	in.	mm	in.	mm	in.	mm	in	mm
NC	30A	(non)	(non)	—	7.87	200	6.50	165	13.37	340	12.00	305	4.75	121	6.25	1588	.25	6
SC21	30A	30A	250V	H,K,R	7.87	200	6.50	165	13.37	340	12.00	305	7.75	197	6.25	1588	.25	6
SC61	30A	30A	600V	H,K,R	7.87	200	6.50	165	13.37	340	12.00	305	7.75	197	6.25	1588	.25	6
SC61	30A	30A	600V	J	7.87	200	6.50	165	13.37	340	12.00	305	7.75	197	6.25	1588	.25	6
SC61	30A	60A	250V	H,K,R	7.87	200	6.50	165	13.37	340	12.00	305	8.25	210	6.25	1588	.25	6
ND	60A	(non)	(non)	—	7.87	200	6.50	165	13.37	340	12.00	305	4.75	121	6.25	1588	.25	6
SD22	60A	30A	600V	J	7.87	200	6.50	165	13.37	340	12.00	305	7.75	197	6.25	1588	.25	6
SD22	60A	60A	250V	H,K,R	7.87	200	6.50	165	13.37	340	12.00	305	8.25	210	6.25	1588	.25	6
SD62	60A	60A	600V	H,K,R	7.87	200	6.50	165	13.37	340	12.00	305	8.25	210	6.25	1588	.25	6
SD62	60A	60A	600V	J	7.87	200	6.50	165	13.37	340	12.00	305	8.00	203	6.25	1588	.25	6
NE	100A	(non)	(non)	—	7.87	200	6.12	155	13.37	340	11.62	295	4.25	108	7.50	191	.25	6
SE263	100A	100A	250V	H,K,R	7.87	200	6.12	155	13.37	340	11.62	295	9.00	229	7.50	191	.25	6
SE263	100A	100A	600V	H,K,R	7.87	200	6.12	155	13.37	340	11.62	295	9.00	229	7.50	191	.25	6
SE263	100A	100A	600V	J	7.87	200	6.12	155	13.37	340	11.62	295	7.75	197	7.50	191	.25	6
NF (1)	200A	(non)	(non)	—	7.87	200	4.12	155	13.37	340	9.62	295	13.25	337	10.25	260	.25	6
SF264 (1)	200A	200A	250V	H,K,R	7.87	200	4.12	155	13.37	340	9.62	295	13.25	337	10.25	260	.25	6
SF264 (1)	200A	200A	600V	H,K,R	7.87	200	4.12	155	13.37	340	9.62	295	13.25	337	10.25	260	.25	6
SF264 (1)	200A	200A	600V	J	7.87	200	4.12	155	13.37	340	9.62	295	13.25	337	10.25	260	.25	6

C371 Disconnect Mechanism

Cutler-Hammer† Mechanism for Circuit Breakers	Amp	Circuit Breaker Type		Enclosure Height								C		D		E	
				60				72									
				A		B		A		B							
		Manufacturer	Frame(s)	in.	mm	in.	mm	in.	mm	in.	mm	in.	mm	in.	mm	in	mm
C371E	150A	Cutler-Hammer	HMCP,FS,FH	7.87	200	7.62	194	13.37	340	13.12	333	6.00	152	5.75	146	.25	6
C371F (1)	225A	Cutler-Hammer	HMCP,JS,JH,JL	7.87	200	7.50	191	13.37	340	13.00	330	11.00	279	8.25	210	.25	6
C371F (1)	400A	Cutler-Hammer	HMCP,KS,KH	7.87	200	7.00	178	13.37	340	12.50	318	9.75	248	8.25	210	.25	6
C371G (1)	600A	Cutler-Hammer	LS,LH	*	*	*	*	13.37	340	10.87	276	8.50	216	12.00	305	.25	6
C371E	150A	Westinghouse	F (series C)	7.87	200	7.62	194	13.37	340	13.12	333	6.00	152	5.75	146	.25	6
C371F (1)	250A	Westinghouse	J (series C)	7.87	200	7.50	191	13.37	340	13.00	330	9.00	229	8.25	210	.25	6
C371F (1)	400A	Westinghouse	K (series C)	7.87	200	7.00	178	13.37	340	12.50	318	9.75	248	8.25	210	.25	6
C371G (1)	600A	Westinghouse	LA,LC	*	*	*	*	13.37	340	10.87	276	8.50	216	12.00	305	.25	6

* Do not install disconnects in this height enclosure.
(1) Wire bending space "B" does not allow the maximum size cable in 60H enclosures.
(2) Wire bending space "B" does not allow the maximum size cable in 72H enclosures.

The dimensional information provided in this table is derived from information supplied by the manufacturer of the equipment to be installed. Fit and function of all equipment should be checked before and after installation to assure proper and safe operation and compliance with the applicable regulations, codes and standards.

† Marks are the property of their respective owners.

Notes: Dimensions are in inches. Millimeters shown are for reference only. Data subject to change without notice.

Floor-Standing Enclosures

Disconnect Ordering Information

General Electric® †

TDA Disconnect Mechanism

General Electric† Mechanism for Switches	Amp	Fuse Clip Rating		Fuse Class	Enclosure Height								C		D		E	
					60				72									
					A		B		A		B							
		Amp	Volt		in.	mm	in.	mm	in.	mm	in.	mm	in.	mm	in.	mm	in	mm
TDOM1A	30A	(non)	(non)	—	7.87	200	8.37	213	13.37	340	13.87	340	7.00	178	5.50	140	.25	6
TDOM1A	30A	30A	250V	H,R	7.87	200	8.37	213	13.37	340	13.87	340	7.00	178	5.50	140	.25	6
TDOM1B	30A	30A	600V	H,R	7.87	200	8.37	213	13.37	340	13.87	340	11.50	292	5.50	140	.25	6
TDOM1B	30A	60A	250V	H,R	7.87	200	8.37	213	13.37	340	13.87	340	11.50	292	5.50	140	.25	6
TDOM1B	30A	60A	600V	H,R	7.87	200	8.37	213	13.37	340	13.87	340	11.50	292	5.50	140	.25	6
TDOM1A	60A	(non)	(non)	—	7.87	200	8.37	213	13.37	340	13.87	340	7.00	178	5.50	140	.25	6
TDOM1B	60A	60A	250V	H,R	7.87	200	8.37	213	13.37	340	13.87	340	11.50	292	5.50	140	.25	6
TDOM1B	60A	60A	600V	H,R	7.87	200	8.37	213	13.37	340	13.87	340	11.50	292	5.50	140	.25	6
TDOM1B	60A	100A	250V	H,R	7.87	200	8.37	213	13.37	340	13.87	340	11.50	292	5.50	140	.25	6
TDOM1B	60A	100A	600V	H,R	7.87	200	8.37	213	13.37	340	13.87	340	11.50	292	5.50	140	.25	6
TDOM1A	100A	(non)	(non)	—	7.87	200	8.37	213	13.37	340	13.87	340	7.00	178	5.50	140	.25	6
TDOM1B	100A	100A	250V	H,R	7.87	200	8.37	213	13.37	340	13.87	340	11.50	292	5.50	140	.25	6
TDOM1B	100A	100A	600V	H,R	7.87	200	8.37	213	13.37	340	13.87	340	11.50	292	5.50	140	.25	6
TDOM1B	100A	200A	250V	H,R	7.87	200	8.37	213	13.37	340	13.87	340	11.50	292	5.50	140	.25	6
TDOM1B	100A	200A	600V	H,R	7.87	200	8.37	213	13.37	340	13.87	340	11.50	292	5.50	140	.25	6
TDOM2	200A	(non)	(non)	—	7.87	200	5.75	146	13.37	340	11.25	286	7.00	178	9.25	235	.25	6
TDOM2	200A	200A	250V	H,R	7.87	200	5.75	146	13.37	340	11.25	286	15.50	394	9.25	235	.25	6
TDOM2	200A	200A	600V	H,R	7.87	200	5.75	146	13.37	340	11.25	286	15.50	394	9.25	235	.25	6

General Electric† Mechanism for Circuit Breakers	Amp	Circuit Breaker Type	Enclosure Height								C		D		E	
			60				72									
			A		B		A		B							
			in.	mm	in.	mm	in.	mm	in.	mm	in.	mm	in.	mm	in	mm
TDOM1A	150A	TEB,TEC,TED,THED	7.87	200	7.25	184	13.37	340	12.75	324	7.00	178	5.50	140	.25	6
TDOM1B	150A	TB1,TEC,TECL	7.87	200	7.25	184	13.37	340	12.75	324	11.50	292	5.50	140	.25	6
TDOM1C	150A	TEL	7.87	200	7.25	184	13.37	340	12.75	324	7.00	178	5.50	140	.25	6
TDOM1D	150A	THCL1	7.87	200	5.87	149	13.37	340	11.37	289	7.00	178	5.50	140	.25	6
TDOM3	225A	TFJ,TFK,THFK,TFL	7.87	200	6.87	174	13.37	340	12.37	314	10.50	267	6.00	152	.25	6
TDOM4	400A	TJJ,TJK4,THJK4,TJL4V	*	*	*	*	13.37	340	11.50	292	8.25	210	9.50	241	.25	6
TDOM4	600A	TJK6,THJK6,TJ4V,TJL4V	*	*	*	*	13.37	340	11.50	292	8.25	210	9.50	241	.25	6
TDOM5	400A	TB4,TJH6S	*	*	*	*	13.37	340	11.50	292	14.25	362	9.50	241	.25	6
TDOM6	225A	TLB2,THLC2	*	*	*	*	13.37	340	10.87	276	11.75	298	9.50	241	.25	6
TDOM6	400A	TLB4,THLC4	*	*	*	*	13.37	340	9.50	241	11.75	298	9.50	241	.25	6

* Do not install disconnects in this height enclosure.

The dimensional information provided in this table is derived from information supplied by the manufacturer of the equipment to be installed. Fit and function of all equipment should be checked before and after installation to assure proper and safe operation and compliance with the applicable regulations, codes and standards.

† Marks are the property of their respective owners.

Notes: Dimensions are in inches. Millimeters shown are for reference only. Data subject to change without notice.

Floor-Standing Enclosures

Disconnect Ordering Information

I-T-E Siemens® †

MAX-FLEX † Disconnects

Enclosure	Cable	I-T-E† Mechanism Circuit Breakers	Circuit Breaker Frame	Amp	Device Height		Enclosure Height A 60		Enclosure Height A 72		C(1) nom		C(1) min		C(1) max		D(2) min		D(2) max	
					in.	mm	in.	mm	in.	mm	in.	mm	in.	mm	in.	mm	in.	mm	in.	mm
12	36	FHOE036	ED	125A	6.37	162	7.87	200	13.37	340	5.37	136	-5.37	-136	15.43	392	3.00	76	14.00	356
	36	FHOE036	CED	125A	9.62	244	7.87	200	13.37	340	8.50	216	-2.00	-51	18.75	476	3.00	76	14.00	356
	36	FHOF036	FD	250A	9.50	241	7.87	200	13.37	340	5.62	143	-5.00	-127	15.75	400	4.50	114	12.50	318
	36	FHOF036	CFD	250A	14.12	349	7.87	200	13.37	340	10.25	260	-.25	-6	20.50	521	4.50	114	12.50	318
	36	FHOJ036	JD,LD	400A, 600A	11.00	279	7.87	200	13.37	340	5.25	133	-5.43	-138	15.37	390	7.50	191	14.00	356
	36	FHOJ036	CJD	400A, 600A	17.87	454	7.87	200	13.37	340	12.12	308	1.50	38	22.25	565	7.50	191	14.00	356
18	36	FHOE036	ED	125A	6.37	162	7.87	200	13.37	340	5.37	136	-2.75	-70	13.50	343	3.00	76	9.75	248
	36	FHOE036	CED	125A	9.62	244	7.87	200	13.37	340	8.50	216	.62	16	16.87	428	3.00	76	9.75	248
	36	FHOF036	FD	250A	9.50	241	7.87	200	13.37	340	5.62	143	2.43	62	13.87	352	4.50	114	8.50	216
	36	FHOF036	CFD	250A	14.12	359	7.87	200	13.37	340	10.25	260	7.25	39	18.62	473	4.50	114	8.50	216
	36	FHOJ036	JD,LD	400A, 600A	11.00	279	7.87	200	13.37	340	5.25	133	-2.87	-73	13.43	341	7.50	191	10.12	257
	36	FHOJ036	CJD	400A, 600A	17.87	454	7.87	200	13.37	340	12.12	308	4.12	105	20.37	517	7.50	191	10.12	257
12	48	*	ED	125A	6.37	162	7.87	200	13.37	340	5.37	136	-16.37	-416	27.50	699	3.00	76	26.37	670
	48	*	CED	125A	9.62	244	7.87	200	13.37	340	8.50	216	-13.00	-330	30.87	784	3.00	76	26.37	670
	48	*	FD	250A	9.50	241	7.87	200	13.37	340	5.62	143	-16.00	-406	27.87	708	4.50	114	24.87	632
	48	*	CFD	250A	14.12	359	7.87	200	13.37	340	10.25	260	-11.25	-286	32.62	829	4.50	114	24.87	632
	48	*	JD,LD	400A, 600A	11.00	279	7.87	200	13.37	340	5.25	133	-16.43	-417	27.43	697	7.50	191	26.37	670
	48	*	CJD	400A, 600A	17.87	454	7.87	200	13.37	340	12.12	308	-9.50	-241	34.37	873	7.50	191	26.37	670
	48	FHON048	MD,ND	800A, 1200A	16.00	406	7.87	200	13.37	340	8.12	206	-6.62	-168	21.93	557	9.00	229	20.50	521
18	48	*	ED	125A	6.37	162	7.87	200	13.37	340	5.37	136	-15.37	-390	26.25	667	3.00	76	24.43	621
	48	*	CED	125A	9.62	244	7.87	200	13.37	340	8.50	216	-12.00	-305	29.50	749	3.00	76	24.43	621
	48	*	FD	250A	9.50	241	7.87	200	13.37	340	5.62	143	-15.00	-381	26.50	673	4.50	114	23.00	584
	48	*	CFD	250A	14.12	359	7.87	200	13.37	340	10.25	260	-10.25	-260	30.37	771	4.50	114	23.00	584
	48	*	JD,LD	400A, 600A	11.00	279	7.87	200	13.37	340	5.25	133	-15.43	-392	26.12	663	7.50	191	24.50	622
	48	*	CJD	400A, 600A	17.87	454	7.87	200	13.37	340	12.12	308	-8.50	-216	33.00	838	7.50	191	24.50	622
	48	FHON048	MD,ND	800A 1200A	16.00	406	7.87	200	13.37	340	8.12	206	-5.12	-130	21.43	544	9.00	229	20.50	521
24	48	*	ED	125A	6.37	162	7.87	200	13.37	340	5.37	136	-13.37	-340	23.25	591	3.00	76	20.62	524
	48	*	CED	125A	9.62	244	7.87	200	13.37	340	8.50	216	-10.00	-254	26.50	673	3.00	76	20.62	524
	48	*	FD	250A	9.50	241	7.87	200	13.37	340	5.62	143	-13.00	-330	23.50	597	4.50	114	19.37	492
	48	*	CFD	250A	14.12	359	7.87	200	13.37	340	10.25	260	-8.25	-210	28.37	721	4.50	114	19.37	492
	48	*	JD,LD	400A, 600A	11.00	279	7.87	200	13.37	340	5.25	133	-13.43	-341	23.12	587	7.50	191	20.93	532
	48	*	CJD	400A, 600A	17.87	454	7.87	200	13.37	340	12.12	308	-6.50	-165	30.00	762	7.50	191	20.93	532
	48	FHON048	MD,ND	800A, 1200A	16.00	406	7.87	200	13.37	340	8.12	206	-3.12	-79	19.93	506	9.00	229	20.50	521

I-T-E SIEMENS®† MAX-FLEX† Disconnect Mechanism

Disconnect Mechanism	Cable Length	Circuit Breaker Types
FHOE036	36	ED2, ED4, ED6, HED4, HED6, ED6ETI
FHOE036	36	CED6, CED6ETI
FHOF036	36	FD6, FXD6, HFD6, FXD6ETI
FHOF036	36	CFD6, CFD6ETI
FHOJ036	36	JD2, JD6, JXD6, HJD6, JXD6ETI, LD6,LXD6, HLD6, LXD6ETI, SHJD6, SLD6,SHLD6
FHOJ036	36	CJD6, CJD6ETI, CLD6, CLD6ETI,SCJD6,SCLD6
FHON048	48	MD6, HMD6, CMD6, MXD6ETI, CMD6ETI, SMD6, SHMD6, SCMD6, ND6, HND6, CND6, SND6, SCND6

* Non-standard mechanism with 48 inch operating cable must be specified.
(1) Flexible operating cable allows disconnect to be mounted within min and max of "C" dimension when "D" is minimum.
(2) Flexible operating cable allows disconnect to be mounted within min and max of "D" dimension when "C" is nominal.

The dimensional information provided in this table is derived from information supplied by the manufacturer of the equipment to be installed. Fit and function of all equipment should be checked before and after installation to assure proper and safe operation and compliance with the applicable regulations, codes and standards.

† Marks are the property of their respective owners.

Notes: Refer to detail sheet for drawing information and associated dimensions.
Flexible cable allows for variable disconnect mounting and adequate wire bending space must be maintained.
Dimensions are in inches. Millimeters shown are for reference only. Data subject to change without notice.

Floor-Standing Enclosures

Disconnect Ordering Information

Square D® †

9422 Disconnect Mechanism

Square D† Mechanism for Switches	Amp	Fuse Clip Rating		Fuse Class	Enclosure Height								C		D		E	
					60				72									
					A		B		A		B							
		Amp	Volt		in.	mm	in.	mm	in.	mm	in.	mm	in.	mm	in.	mm	in	mm
RC-1	30A	(non)	(non)	—	7.87	200	7.75	197	13.37	340	13.18	335	3.25	83	7.25	184	.25	6
RC-2	30A	30A	250V	H,K,R	7.87	200	7.75	197	13.37	340	13.18	335	5.00	127	7.25	184	.25	6
RC-3	30A	30A	600V	H,K,R	7.87	200	7.75	197	13.37	340	13.18	335	8.00	203	7.25	184	.25	6
RC-3	30A	30A	600V	J	7.87	200	7.75	197	13.37	340	13.18	335	5.00	127	7.25	184	.25	6
RC-3	30A	60A	250V	H,K,R	7.87	200	7.75	197	13.37	340	13.18	335	6.00	152	7.25	184	.25	6
TC-1	30A	(non)	(non)	—	7.87	200	5.87	149	13.37	340	11.37	289	5.75	146	6.25	159	.25	6
TC-2	30A	30A	250V	H,K,R	7.87	200	5.87	149	13.37	340	11.37	289	5.75	146	6.25	159	.25	6
TC-3	30A	30A	600V	H,K,R	7.87	200	5.87	149	13.37	340	11.37	289	7.75	197	6.25	159	.25	6
TC-3	30A	30A	600V	J	7.87	200	5.87	149	13.37	340	11.37	289	5.75	146	6.25	159	.25	6
TC-3	30A	60A	250V	H,K,R	7.87	200	5.87	149	13.37	340	11.37	289	6.00	152	6.25	159	.25	6
TD-1	60A	(non)	(non)	—	7.87	200	6.75	171	13.37	340	12.25	311	6.50	165	6.75	171	.25	6
TD-2	60A	30A	600V	H,K,R	7.87	200	6.75	171	13.37	340	12.25	311	8.50	216	6.75	171	.25	6
TD-2	60A	60A	250V	H,K,R	7.87	200	6.75	171	13.37	340	12.25	311	6.50	165	6.75	171	.25	6
TD-3	60A	60A	600V	H,K,R	7.87	200	6.75	171	13.37	340	12.25	311	9.00	229	6.75	171	.25	6
TD-3	60A	60A	600V	J	7.87	200	6.75	171	13.37	340	12.25	311	6.50	165	6.75	171	.25	6
TE-1	100A	(non)	(non)	—	7.87	200	6.50	165	13.37	340	12.00	305	4.75	121	8.50	216	.25	6
TE-2	100A	100A	250V	H,K,R	7.87	200	6.50	165	13.37	340	12.00	305	7.50	191	8.50	216	.25	6
TE-2	100A	100A	600V	H,K,R	7.87	200	6.50	165	13.37	340	12.00	305	9.50	241	8.50	216	.25	6
TE-2	100A	100A	600V	J	7.87	200	6.50	165	13.37	340	12.00	305	6.25	159	8.50	216	.25	6
TE-3	100A	200A	600V	J	7.87	200	6.50	165	13.37	340	12.00	305	13.75	349	8.50	216	.25	6
TF-1	200A	(non)	(non)	—	7.87	200	5.12	130	13.37	340	10.62	270	5.50	140	11.75	298	.25	6
TF-2	200A	200A	250V	H,K,R	7.87	200	5.12	130	13.37	340	10.62	270	11.50	292	11.75	298	.25	6
TF-2	200A	200A	600V	H,K,R	7.87	200	5.12	130	13.37	340	10.62	270	14.00	356	11.75	298	.25	6
TF-2	200A	200A	600V	J	7.87	200	5.12	130	13.37	340	10.62	270	10.25	260	11.75	298	.25	6
TF-3	200A	400A	600V	J	7.87	200	5.15	131	13.37	340	10.62	270	14.50	368	11.75	298	.25	6

Square D† Mechanism for Circuit Breakers	Amp	Circuit Breaker Type	Enclosure Height								C		D		E	
			60				72									
			A		B		A		B							
			in.	mm	in.	mm	in.	mm	in.	mm	in.	mm	in.	mm	in	mm
RN-1	100A	FAL,FHL,FCL	7.87	200	6.87	174	13.37	340	12.37	314	5.25	133	5.50	140	.25	6
RP-1	250A	KAL,KHL,KCL	7.87	200	6.62	168	13.37	340	13.12	333	7.25	184	5.75	146	.25	6
RR-1	400A	LAL,LHL,Q4L	*	*	*	*	13.37	340	8.75	222	7.75	197	9.00	229	.25	6
RR-2	400A	ILL	*	*	*	*	13.37	340	13.12	333	11.00	279	15.75	400	.25	6

* Do not install disconnects in this height enclosure.

The dimensional information provided in this table is derived from information supplied by the manufacturer of the equipment to be installed. Fit and function of all equipment should be checked before and after installation to assure proper and safe operation and compliance with the applicable regulations, codes and standards.

† Marks are the property of their respective owners.

Notes: Dimensions are in inches. Millimeters shown are for reference only. Data subject to change without notice.

Floor-Standing Enclosures
Disconnect Ordering Information

ALLEN-BRADLEY †
Standard enclosure designed to accept variable depth type 1494V / 1494U.

Allen-Bradley† 1494V / 1494U disconnect switch:

1. Disconnect switch.
2. Operating mechanism.
3. Operating handle.
4. Fuse block kit, (if required).
5. Fuse clip kit, (if required).
6. Line and load connectors, (if necessary).
7. Connecting rod.

Allen-Bradley† 1494V / 1494U circuit breaker:

1. Circuit breaker, (General Electric, Westinghouse).
2. Operating mechanism.
3. Operating handle.
4. Line and load connectors, (if necessary).
5. Connecting rod.

NOTE: Allen-Bradley support kit is recommended when 1494V devices are installed in 72 inch high center mounted enclosures.

Standard enclosures designed to accept fixed depth type 1494F or 1494D.

Allen-Bradley† 1494F disconnect switch:

1. Disconnect switch.
2. Operating mechanism.
3. Operating handle.
4. Fuse block kit, (if required).
5. Fuse clip kit, (if required).
6. Line and load connectors, (if necessary).

Allen-Bradley† 1494D circuit breaker:

1. Circuit breaker.
2. Operating mechanism.
3. Operating handle.
4. Line and load connectors, (if necessary).
5. Slide mechanism.

CUTLER-HAMMER †
Standard enclosures designed to accept variable depth type C361 or C371.

Cutler-Hammer† C361 disconnect switch:

1. Disconnect switch.
2. Operating mechanism.
3 Operating handle.
4. Fuse clip kit, (if required).
5. Line and load connectors, (if necessary).

NOTE: Items 1, 2 and 3 can be ordered as an assembly.

Cutler-Hammer† C371 circuit breaker:

1. Circuit breaker.
2. Operating mechanism.
3. Operating handle.
4. Line and load connectors, (if necessary).

NOTE: Items 2 and 3 can be ordered as an assembly.

GENERAL ELECTRIC †
Standard enclosures designed to accept variable depth type TDA.

General Electric† TDA disconnect switch:

1. Disconnect Switch, (QMR, QMW).
2. Operating mechanism.
3. Operating handle.
4. Fuse clip kit or no-fuse kit, (if required).
5. Line and load connectors, (if necessary).
6. Extended length drive rod, (if required).

NOTE: These items can be ordered as an assembly.

General Electric† TDA circuit breaker:

1. Circuit breaker.
2. Operating mechanism.
3. Operating handle.
4. Line and load connectors, (if necessary).
5. Extended length drive rod, (if required).

NOTE: When TDOM1 and TDOM3 operating mechanism is used on 72 inch high center mounted enclosures a flange stiffener kit TDSR is recommended.

I-T-E SIEMENS †
Standard enclosures designed to accept MAX-FLEX† type FHO.

I-T-E† MAX-FLEX† circuit breaker:

1. Circuit breaker.
2. Operating mechanism.
3. Operating handle.
4. Line and load connectors, (if necessary).
5. Operating cable.

NOTE: Items 2, 3 and 5 can be ordered as an assembly, standard with a 36 inch long operating cable. All 24 inch enclosures require a 48 inch long cable.

† Marks are the property of their respective owners.

Notes: Data subject to change without notice.

Floor-Standing Enclosures
Disconnect Ordering Information

SQUARE D †
Standard enclosures designed to accept variable depth type 9422.

Square D† 9422 disconnect switch:

1. Disconnect switch.
2. Operating mechanism.
3. Operating handle.
4. Fuse Clip kit, (if required).
5. Line and load connectors, (if necessary).
6. Connecting rod.

NOTE: Square D support kit 9422-C1 is recommended when some devices are installed in 72 inch high center mounted enclosures.

Square D† 9422 circuit breaker:

1. Circuit breaker.
2. Operating mechanism.
3. Operating handle.
4. Line and load connectors, (if necessary).
5. Connecting rod.

NOTE: Square D support kit 9422-C1 is recommended when some devices are installed in 72 inch high enclosures.

Important Note

When ordering flange or center mounted disconnect equipment, be sure to include all necessary components listed below.

1. Enclosure includes the following equipment:
   Enclosure door locking handle and rods
   Door interlocking system
   Interlocking connecting rod
   Adjustable bracket, (see note 3)
2. Operator adapter plate, gasket and hardware for the type of disconnect device being used MUST be ordered separately (see page 452)
3. 24 inch deep enclosures include an adjustable bracket for mounting some disconnects:
   Cutler-Hammer† C361 device
   Cutler-Hammer† C371 E and F devices unless long connecting rod C371CS1 is specified
   Cutler-Hammer† C371 G device unless long connecting rod C371CS2 is specified
   General Electric† TDA device extended length rod TDSR is specified
   Square D† 9422 device unless extra long connecting rod 9422-R2 is specified
   Note: Some devices require two rods, consult the device manufacturer (Westinghouse AMT below handle device).
4. Panels are ordered separately.
5. Disconnects and related components are available from the manufacturer.
6. The disconnect ordering information provided is derived from information supplied by the manufacturer of the equipment to be installed. Fit and function of all equipment should be checked before and after installation to assure proper and safe operation and compliance with the applicable regulations, codes and standards.

† Marks are the property of their respective owners.

Notes: Data subject to change without notice.

Ground-Mount Enclosures
Type 4/12 Heavy-Duty Single and Multi-Door
Flange-Mount Free-Standing with 3-Point Locking
Data Sheet

FD723318-4FS

FD8411718-4FS

FD725318-4FS

Application
- Houses electrical controls and instruments
- Suitable for indoor or outdoor use
- Protects against circulating and windblown dust and rain, falling dirt, splashing water, and hose-directed water

Standards
- UL 508A, Type 12, Type 4
- CSA C22.2 No.94, Type 12, Type 4
- NEMA 250, Type 12, Type 4

Finish
- Wash and phosphate undercoat
- ANSI 61 gray polyester powder finish
- Panels have white enamel finish

Accessories
- Channel mounting hardware
- Blank adapter plates
- Operator adapters
- Touch-up paint
- Replacement handles: defeater handle BD-PDHB and keyed kandle BD-PKHB (see pages 427 and 428).
- See Accessories Section

Discount Schedule: C2

Subclass: see pages 321 - 325

Construction
- Enclosure body and doors are fabricated from from steel of thickness ranging from 12GA to 10GA (see appropriate charts for gauge)
- All continuous welded seams are finished smooth
- Doors are secured to the body with removable concealed hinges and a center locating 3-point key-locking and padlock handle mechanism
- Additional quarter-turn latches provided at top and bottom on all enclosure doors
- Modern bevel profile on hinge side of enclosure door(s)
- Right-side door serves as the master door with a defeater mechanism which requires a screwdriver to open
- Slave doors cannot open without activating mechanical interlock but can close in any order
- Universal opening on right-side flange will accommodate most disconnect operators when used with operator adapter, (order separately - see page 452)
- Doors have an oil-resistant gasket
- Ground stud provided on door(s) and body
- Print pocket provided
- Lighting mounting channel provided
- Fixed center posts are supported from the front to back for enclosure rigidity
- Removable center post allows for easy access and panel installation
- Removable panels mounted on .375-16 collar studs and panel supports
- Large lifting eyebolts are supplied

Important Note

When ordering flange-mounted disconnect enclosures, be sure to include all the necessary components.
1. A flange-mounted disconnect enclosure
2. Operator adapter plates MUST be ordered for the specific brand and type of disconnect being used, (see page 452)

Disconnect switch (or circuit breaker), operating handle and operating mechanism are not furnished with enclosure, see disconnect ordering information, pages 326, 332 - 339.

Notes: We can provide special sizes, finishes and other modifications. Consult the factory for your special requirements.

Ground-Mount Enclosures Type 4/12 Heavy-Duty Single-Door Flange-Mount Free-Standing with 3-Point Locking

Illustration Sheet, and Catalog Number Subclass: DOE

Enclosure Catalog Number	Enclosure Size Height x Width x Depth A x B x C in.	mm	Body/Door Gauge	Panel Size Height x Width in.	mm
FD722718-4FS	72.00 x 27.50 x 18.00	1829 x 699 x 457	12/12	60.00 x 21.75	1524 x 552
FD723318-4FS	72.00 x 33.50 x 18.00	1829 x 851 x 457	12/12	60.00 x 27.75	1524 x 705
FD723918-4FS	72.00 x 39.50 x 18.00	1829 x 1003 x 457	12/12	60.00 x 33.75	1524 x 857
FD843918-4FS	84.00 x 39.50 x 18.00	2134 x 1003 x 457	12/10	72.00 x 33.75	1829 x 857
FD903920-4FS	90.00 x 39.50 x 20.00	2286 x 1003 x 508	12/10	78.00 x 33.75	1981 x 857
FD903924-4FS	90.00 x 39.50 x 24.00	2286 x 1003 x 610	12/10	78.00 x 33.75	1981 x 857

ID = Inside Dimension

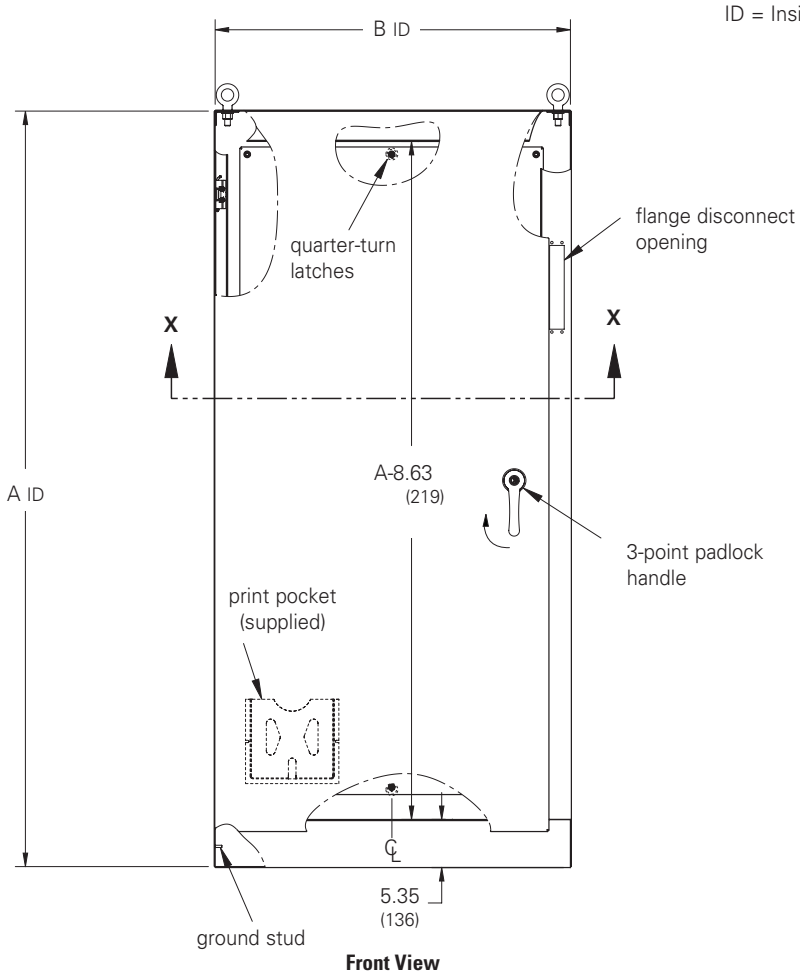

Front View

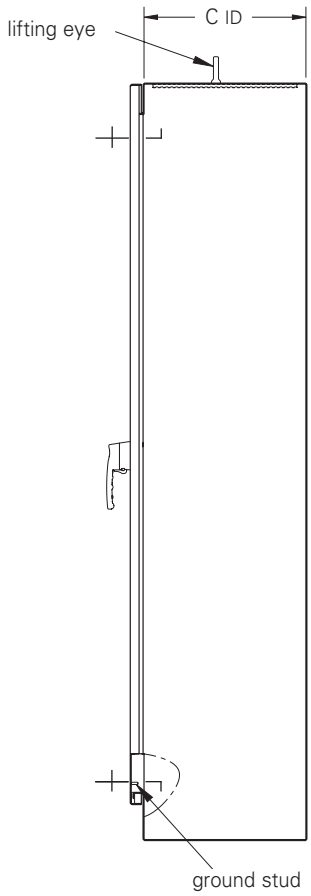

Side View

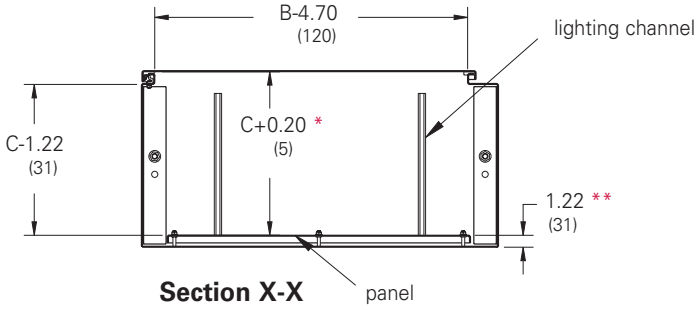

Section X-X

* From inside of door to front of panel

** From front of panel to back inside of enclosure

Notes: Dimensions are in inches. Millimeters shown are for reference only. Data subject to change without notice.
Four lifting eyes are furnished when C dimension is 24" (609 mm) or more.

Ground-Mount Enclosures
Type 4/12 Heavy-Duty Double-Door
Flange-Mount Free-Standing with 3-Point Locking

Illustration Sheet, and Catalog Number

Subclass: DOE

Enclosure Catalog Number	Enclosure Size Height x Width x Depth A x B x C in.	mm	Body/Door Gauge	Panel Size Height x Width in.	mm
FD725318-4FS	72.00 x 53.75 x 18.00	1829 x 1365 x 457	12/12	60.00 x 48.00	1524 x 1219
FD726518-4FS	72.00 x 65.75 x 18.00	1829 x 1670 x 457	12/12	60.00 x 60.00	1524 x 1524
FD727718-4FS	72.00 x 77.75 x 18.00	1829 x 1975 x 457	12/12	60.00 x 72.00	1524 x 1829
FD727724-4FS	72.00 x 77.75 x 24.00	1829 x 1975 x 610	12/12	60.00 x 72.00	1524 x 1829
FD847718-4FS	84.00 x 77.75 x 18.00	2134 x 1975 x 457	12/12	72.00 x 72.00	1829 x 1829
FD907720-4FS	90.00 x 77.75 x 20.00	2286 x 1975 x 508	12/12	78.00 x 72.00	1981 x 1829
FD907724-4FS	90.00 x 77.75 x 24.00	2286 x 1975 x 610	12/12	78.00 x 72.00	1981 x 1829

All back panels are 10 GA and other panels are 12 GA

ID = Inside Dimension

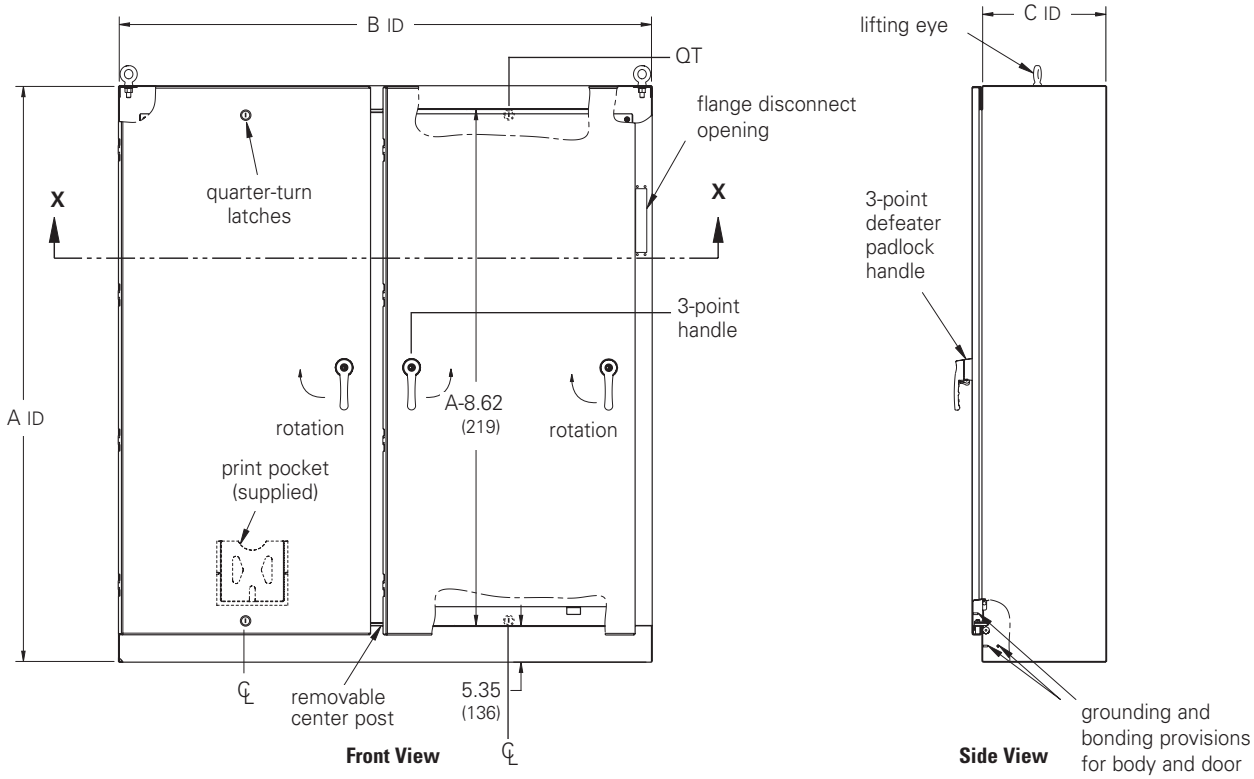

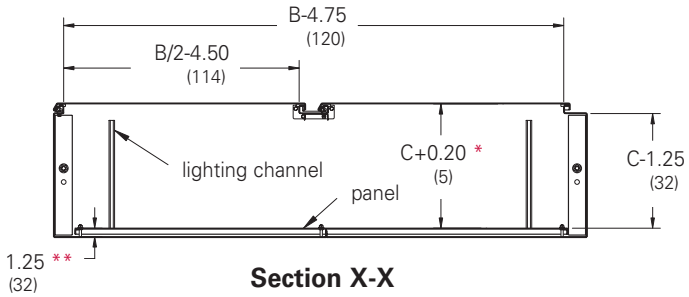

* From inside of door to front of panel

** From front of panel to back inside of enclosure

Notes: Dimensions are in inches. Millimeters shown are for reference only. Data subject to change without notice.
Four lifting eyes are furnished when C dimension is 24" (609 mm) or more.

Ground-Mount Enclosures
Type 4/12 Heavy-Duty Three-Door
Flange-Mount Free-Standing with 3-Point Locking
Illustration Sheet, and Catalog Number
Subclass: DOE

Enclosure Catalog Number	Enclosure Size Height x Width x Depth A x B x C in.	mm	D in.	mm	E in.	mm	Body/Door Gauge	Panel A Size Height x Width in.	mm	Panel B Size Height x Width in.	mm
FD729918-4FS	72.00 x 99.50 x 18.00	1829 x 2527 x 457	65.10	1653	34.40	874	10/12	60.00 x 27.75	1524 x 705	60.00 x 60.00	1524 x 1524
FD8411718-4FS	84.00 x 117.50 x 18.00	2134 x 2985 x 457	77.10	1958	40.40	1026	10/12	72.00 x 33.75	1829 x 857	72.00 x 72.00	1829 x 1829
FD9011724-4FS	90.00 x 117.50 x 24.00	2286 x 2985 x 610	77.10	1958	40.40	1026	10/12	78.00 x 33.75	1981 x 857	78.00 x 72.00	1981 x 1829

ID = Inside Dimension

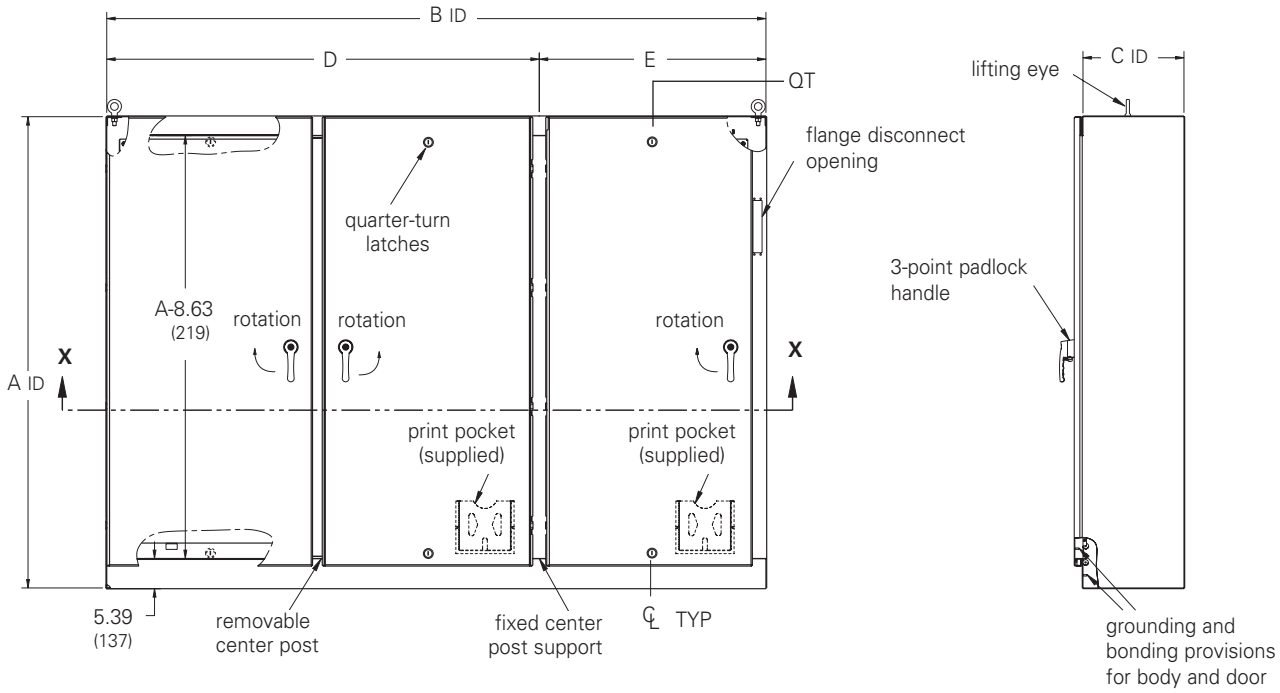

Front View **Side View**

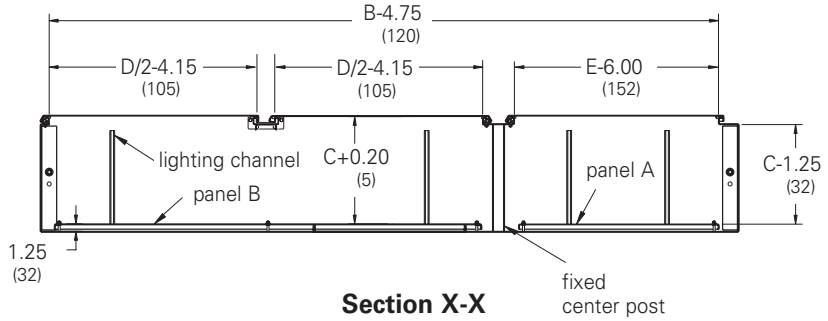

Section X-X

Notes: Dimensions are in inches. Millimeters shown are for reference only. Data subject to change without notice.
Four lifting eyes are furnished when C dimension is 24" (610 mm) or more.

Ground-Mount Enclosures
Type 4/12 Heavy-Duty Four-Door
Flange-Mount Free-Standing with 3-Point Locking

Illustration Sheet, and Catalog Number
Subclass: DOE

Enclosure Catalog Number	Enclosure Size Height x Width x Depth in.	mm	Body/Door Gauge	Panel Size Height x Width in.	mm
FD8415718-4FS	84.00 x 157.50 x 18.00	2134 x 4001 x 457	10/12	72.00 x 72.00	1829 x 1829

ID = Inside Dimension

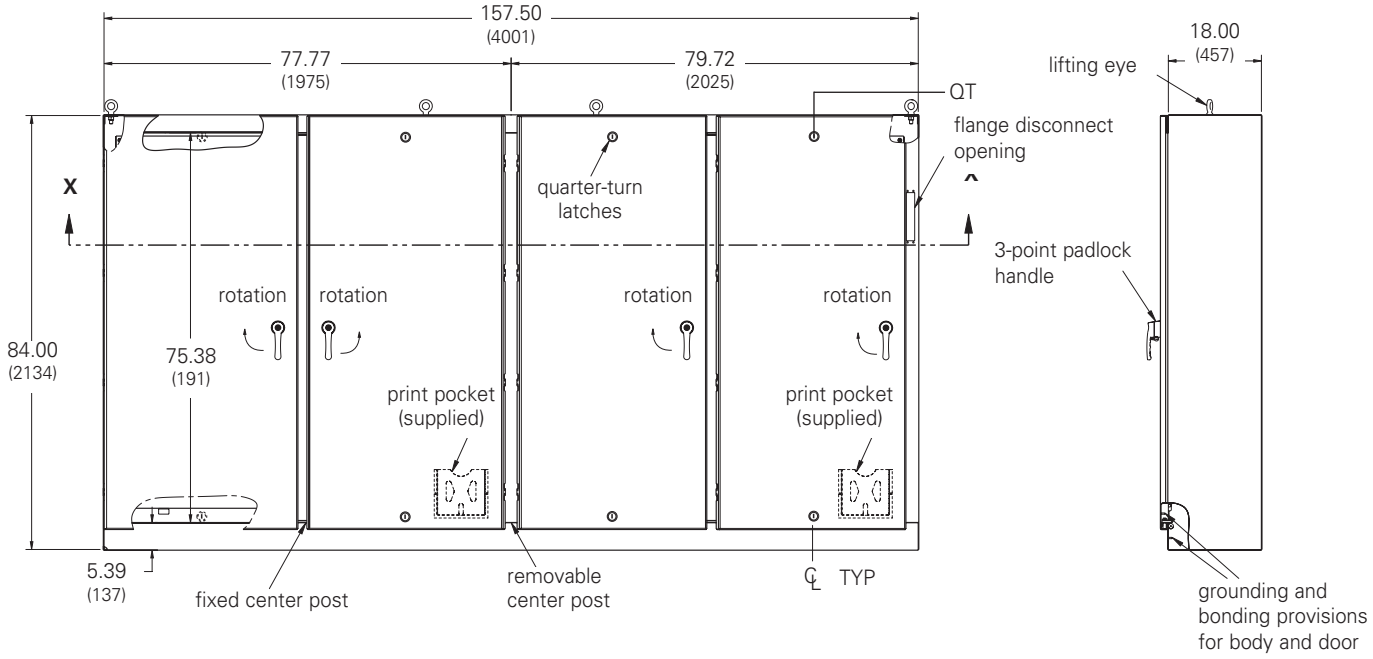

Front View

Side View

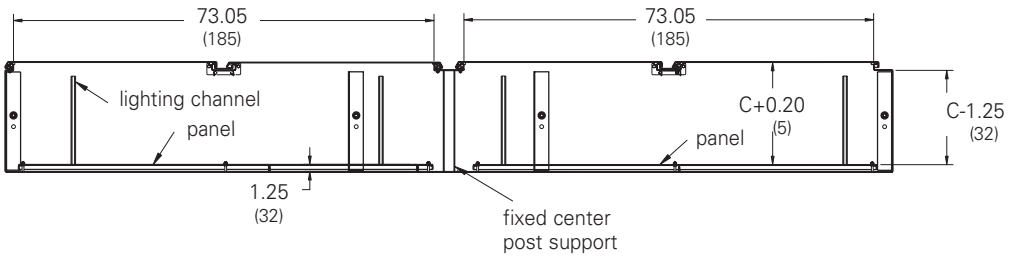

Section X-X

Notes: Dimensions are in inches. Millimeters shown are for reference only. Data subject to change without notice.

Ground-Mount Enclosures
Type 4/12 Heavy-Duty Five-Door
Flange-Mount Free-Standing with 3-Point Locking
Illustration Sheet, and Catalog Number
Subclass: DOE

Enclosure Catalog Number	Enclosure Size Height x Width x Depth in.	Enclosure Size Height x Width x Depth mm	Body/Door Gauge	Panel A Size Height x Width in.	Panel A Size Height x Width mm	Panel B Size Height x Width in.	Panel B Size Height x Width mm
FD8419618-4FS	84.00 x 196.75 x 18.00	2134 x 4997 x 457	10/12	72.00 x 33.75	1829 x 857	72.00 x 72.00	1829 x 1829

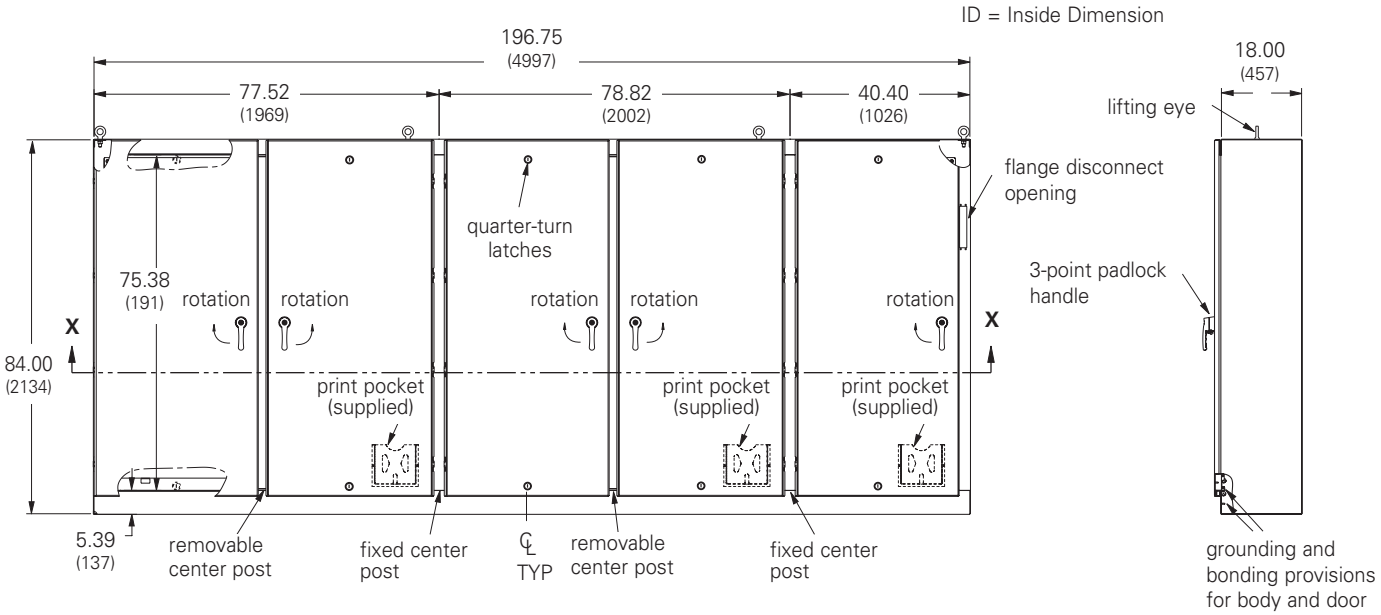

Front View **Side View**

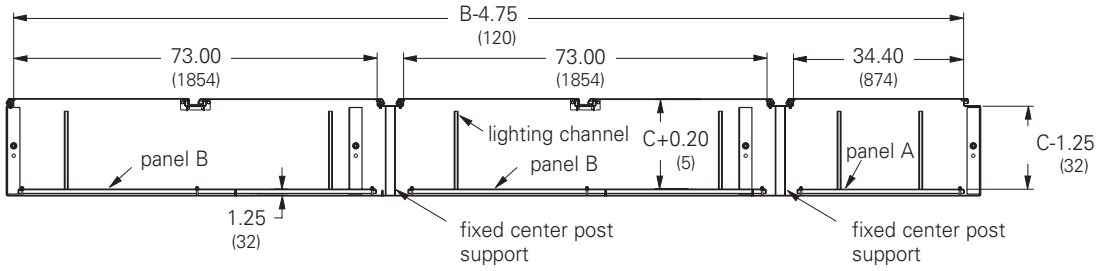

Section X-X

Notes: Dimensions are in inches. Millimeters shown are for reference only. Data subject to change without notice.

Ground-Mount Enclosures
Type 4X/12 Heavy-Duty Single and Multi-Door
Flange-Mount Free-Standing with 3-Point Locking
Data Sheet

FD723318-4XSFS

FD8411718-4XSFS

FD725318-4XSFS

Application
- Houses electrical controls and equipment
- Intended for indoor or outdoor use where a corrosive environment exists
- Protects against corrosion, circulating and windblown dust and rain, falling dirt, splashing water and hose directed water

Standards
- UL 508A, Type 12, NEMA 4X
- CSA C22.2 No.94, Type 12, Type 4X
- NEMA 250, Type 12, Type 4X

Finish
- Doors and sides have a smooth #4 brushed finish

Accessories
- Channel mounting hardware
- Blank adapter plates
- Operator adapters
- Touch-up paint
- Replacement handles: defeater handle BD-PDHB and keyed handle BD-PKHB (see pages 427 and 428).
- See Accessories Section

Discount Schedule: C2

Subclass: see pages 321 - 325

Construction
- Enclosure body and doors are fabricated from 304 stainless steel of thickness ranging from 12GA to 10GA (see appropriate charts for gauge)
- All continuous welded seams are finished smooth
- Doors are secured to the body with removable concealed hinges and a center locating 3-point key-locking and padlock handle mechanism
- Additional quarter-turn latches provided at top and bottom on all enclosure doors
- Modern bevel profile on hinge side of enclosure door(s)
- Right-side door serves as the master door with a defeater mechanism which requires a screwdriver to open
- Slave doors cannot open without activating mechanical interlock but can close in any order
- Universal opening on right-side flange will accommodate most disconnect operators when used with operator adapter, (order separately - see page 452)
- Doors have an oil-resistant gasket
- Ground stud provided on door(s) and body
- Print pocket provided
- Lighting mounting channel provided
- Fixed center posts are supported from the front to back for enclosure rigidity
- Removable center post allows for easy access and panel installation
- Removable panels mounted on .375-16 collar studs and panel supports
- Large lifting eyebolts are supplied

Important Note

When ordering flange-mounted disconnect enclosures, be sure to include all the necessary components.

1. A flange-mounted disconnect enclosure
2. Operator adapter plates MUST be ordered for the specific brand and type of disconnect being used, (see page 452)

Disconnect switch (or circuit breaker), operating handle and operating mechanism are not furnished with enclosure, see disconnect ordering information, pages 326, 332 - 339.

Notes: We can provide special sizes, finishes and other modifications. Consult the factory for your special requirements.

Ground-Mount Enclosures Type 4X/12 Heavy-Duty Single-Door Flange-Mount Free-Standing with 3-Point Locking

Illustration Sheet, and Catalog Number Subclass: DOF

Enclosure Catalog Number	Enclosure Size Height x Width x Depth A x B x C in.	mm	Body/Door Gauge	Panel Size Height x Width in.	mm
FD722718-4XSFS	72.00 x 27.50 x 18.00	1829 x 699 x 457	12/12	60.00 x 21.75	1524 x 552
FD723318-4XSFS	72.00 x 33.50 x 18.00	1829 x 851 x 457	12/12	60.00 x 27.75	1524 x 705
FD723918-4XSFS	72.00 x 39.50 x 18.00	1829 x 1003 x 457	12/12	60.00 x 33.75	1524 x 857
FD843918-4XSFS	84.00 x 39.50 x 18.00	2134 x 1003 x 457	12/10	72.00 x 33.75	1829 x 857
FD903920-4XSFS	90.00 x 39.50 x 20.00	2286 x 1003 x 508	12/10	78.00 x 33.75	1981 x 857
FD903924-4XSFS	90.00 x 39.50 x 24.00	2286 x 1003 x 610	12/10	78.00 x 33.75	1981 x 857

ID = Inside Dimension

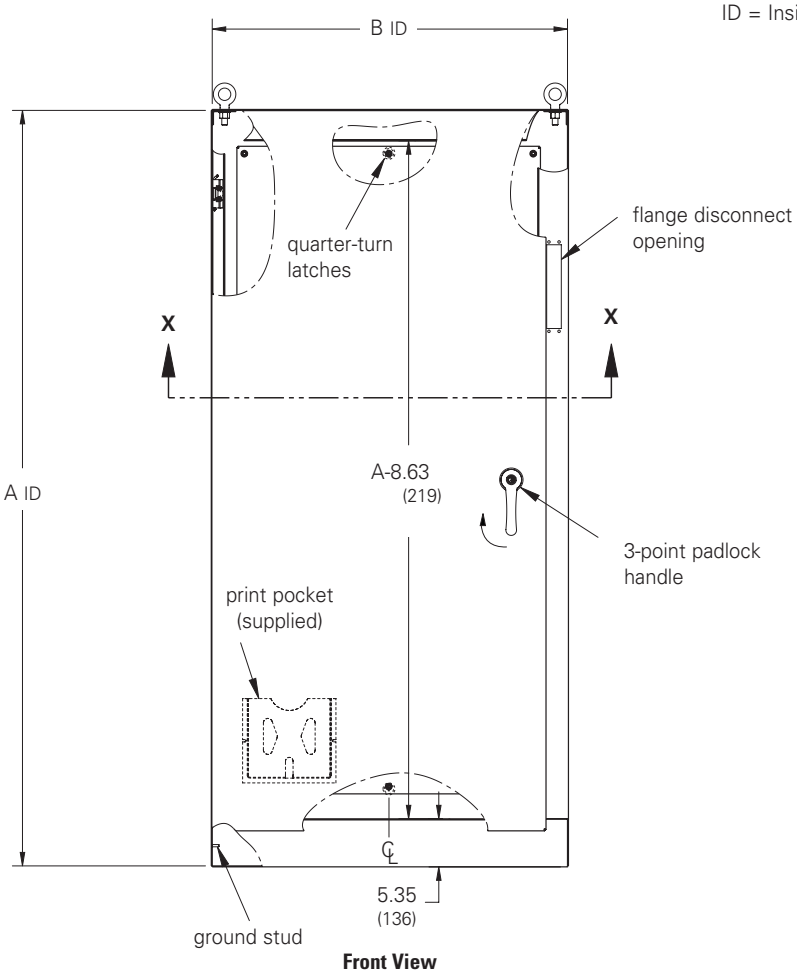

Front View

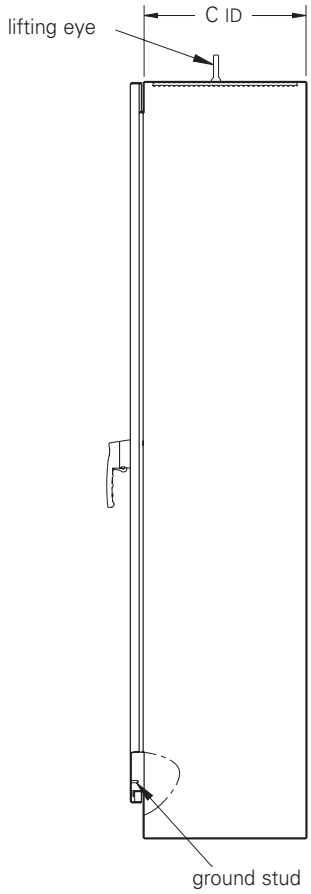

Side View

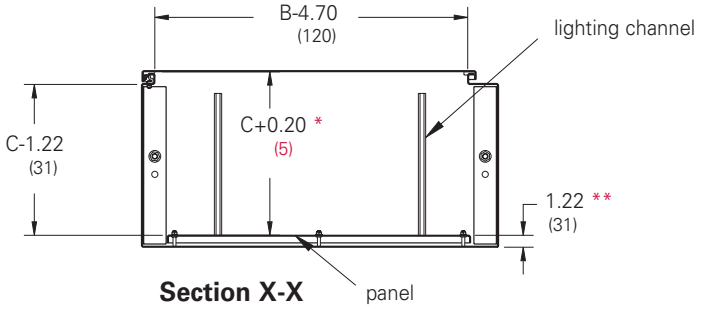

Section X-X

* From inside of door to front of panel

** From front of panel to back inside of enclosure

Notes: Dimensions are in inches. Millimeters shown are for reference only. Data subject to change without notice.
Four lifting eyes are furnished when C dimension is 24" (609 mm) or more.

Ground-Mount Enclosures
Type 4X/12 Heavy-Duty Double-Door
Flange-Mount Free-Standing with 3-Point Locking

Illustration Sheet, and Catalog Number

Subclass: DOF

Enclosure Catalog Number	Enclosure Size Height x Width x Depth A x B x C in.	mm	Body/Door Gauge	Panel Size Height x Width in.	mm
FD725318-4XSFS	72.00 x 53.75 x 18.00	1829 x 1365 x 457	12/12	60.00 x 48.00	1524 x 1219
FD726518-4XSFS	72.00 x 65.75 x 18.00	1829 x 1670 x 457	12/12	60.00 x 60.00	1524 x 1524
FD727718-4XSFS	72.00 x 77.75 x 18.00	1829 x 1975 x 457	12/12	60.00 x 72.00	1524 x 1829
FD727724-4XSFS	72.00 x 77.75 x 24.00	1829 x 1975 x 610	12/12	60.00 x 72.00	1524 x 1829
FD847718-4XSFS	84.00 x 77.75 x 18.00	2134 x 1975 x 457	12/12	72.00 x 72.00	1829 x 1829
FD907720-4XSFS	90.00 x 77.75 x 20.00	2286 x 1975 x 508	12/12	78.00 x 72.00	1981 x 1829
FD907724-4XSFS	90.00 x 77.75 x 24.00	2286 x 1975 x 610	12/12	78.00 x 72.00	1981 x 1829

All back panels are 10 GA and other panels are 12 GA

ID = Inside Dimension

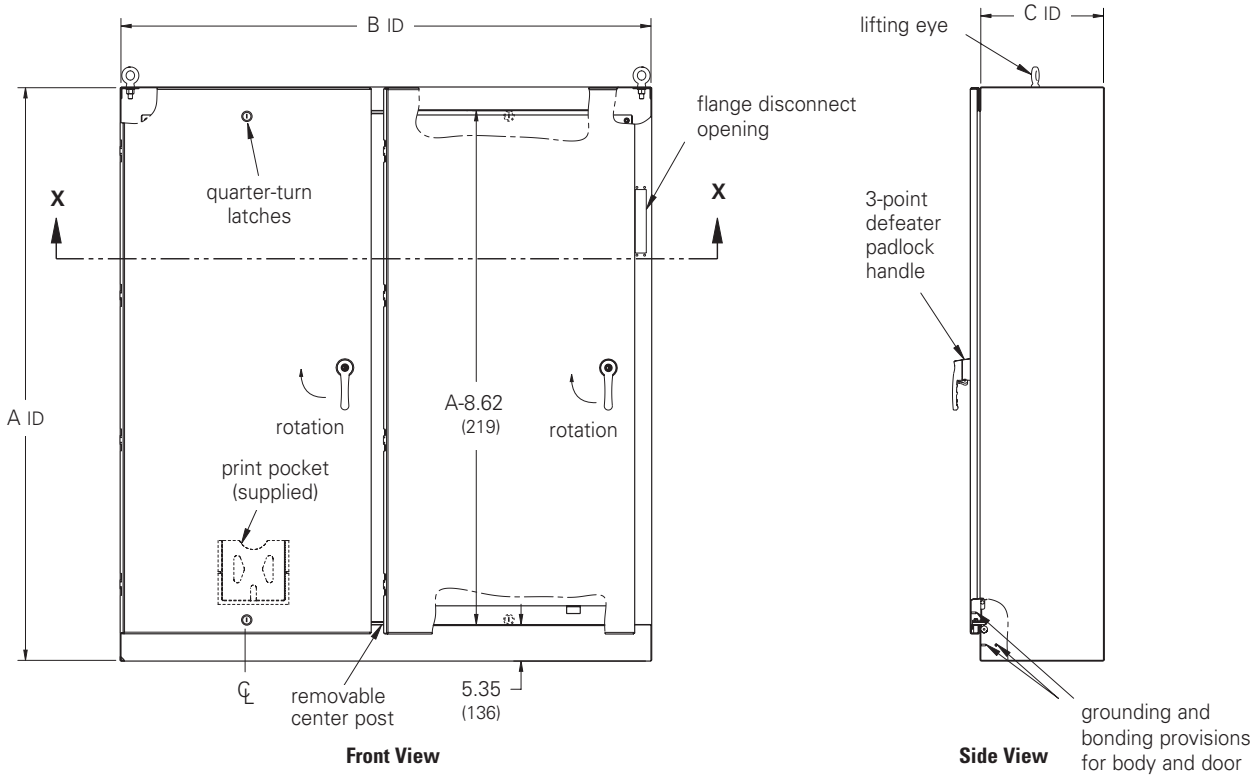

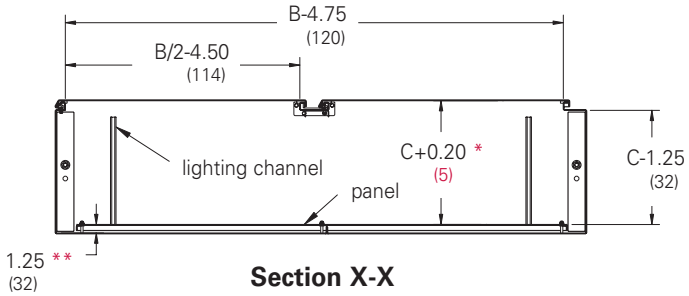

* From inside of door to front of panel

** From front of panel to back inside of enclosure

Notes: Dimensions are in inches. Millimeters shown are for reference only. Data subject to change without notice.
Four lifting eyes are furnished when C dimension is 24" (609 mm) or more.

Disconnect Enclosures

Ground-Mount Enclosures
Type 4X/12 Heavy-Duty Three-Door
Flange-Mount Free-Standing with 3-Point Locking
Illustration Sheet, and Catalog Number
Subclass: DOF

Enclosure Catalog Number	Enclosure Size Height x Width x Depth A x B x C in.	mm	D in.	mm	E in.	mm	Body/Door Gauge	Panel A Size Height x Width in.	mm	Panel B Size Height x Width in.	mm
FD729918-4XSFS	72.00 x 99.50 x 18.00	1829 x 2527 x 457	65.10	1653	34.40	874	10/12	60.00 x 27.75	1524 x 705	60.00 x 60.00	1524 x 1524
FD8411718-4XSFS	84.00 x 117.50 x 18.00	2134 x 2985 x 457	77.10	1958	40.40	1026	10/12	72.00 x 33.75	1829 x 857	72.00 x 72.00	1829 x 1829
FD9011724-4XSFS	90.00 x 117.50 x 24.00	2286 x 2985 x 610	77.10	1958	40.40	1026	10/12	78.00 x 33.75	1981 x 857	78.00 x 72.00	1981 x 1829

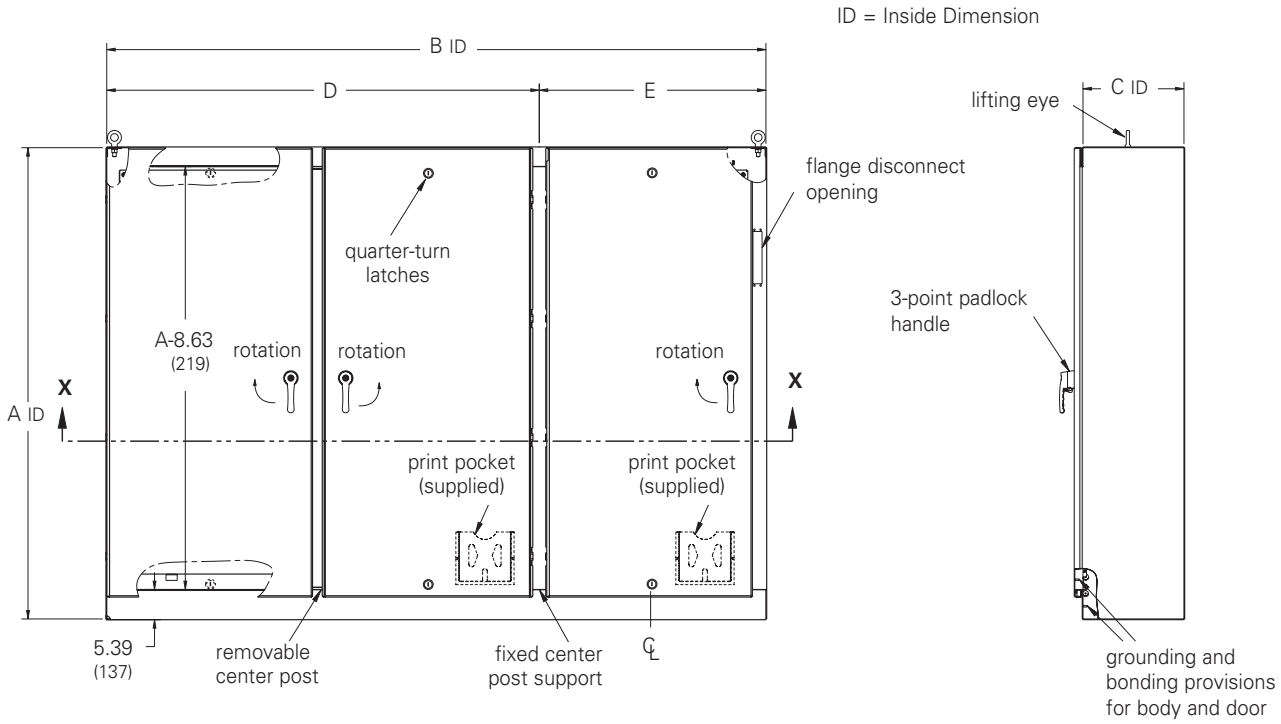

Front View **Side View**

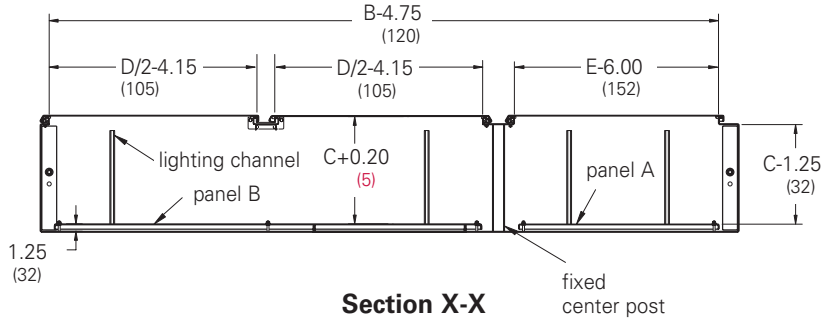

Section X-X

Notes: Dimensions are in inches. Millimeters shown are for reference only. Data subject to change without notice.
Four lifting eyes are furnished when C dimension is 24" (610 mm) or more.

Ground-Mount Enclosures
Type 4X/12 Heavy-Duty Four-Door
Flange-Mount Free-Standing with 3-Point Locking

Illustration Sheet, and Catalog Number

Subclass: DOF

Enclosure Catalog Number	Enclosure Size Height x Width x Depth in.	mm	Body/Door Gauge	Panel Size Height x Width in.	mm
FD8415718-4XSFS	84.00 x 157.50 x 18.00	2134 x 4001 x 457	10/10	72.00 x 72.00	1829 x 1829

ID = Inside Dimension

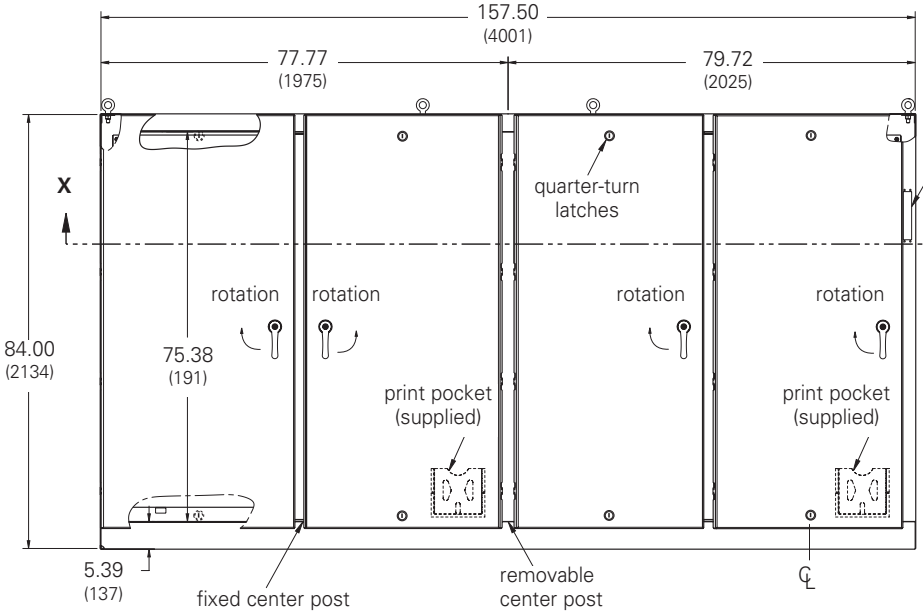

Front View

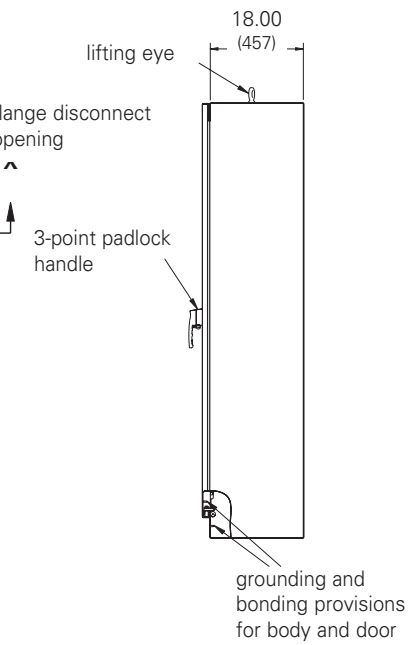

Side View

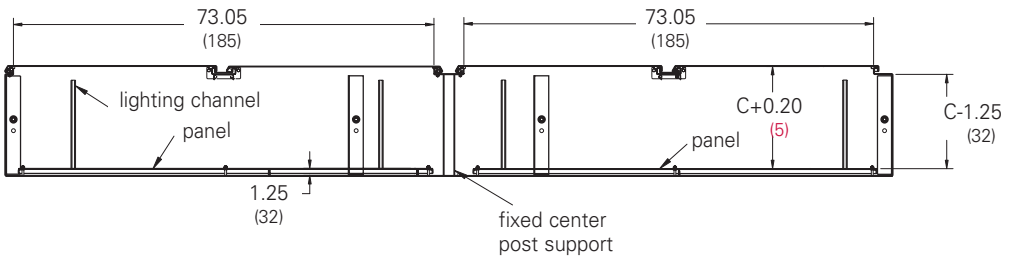

Section X-X

Notes: Dimensions are in inches. Millimeters shown are for reference only. Data subject to change without notice.

Ground-Mount Enclosures
Type 4X/12 Heavy-Duty Five-Door
Flange-Mount Free-Standing with 3-Point Locking
Illustration Sheet, and Catalog Number
Subclass: DOF

Enclosure Catalog Number	Enclosure Size Height x Width x Depth in.	Enclosure Size Height x Width x Depth mm	Body/Door Gauge	Panel A Size Height x Width in.	Panel A Size Height x Width mm	Panel B Size Height x Width in.	Panel B Size Height x Width mm
FD8419618-4XSFS	84.00 x 196.75 x 18.00	2134 x 4997 x 457	10/12	72.00 x 33.75	1829 x 857	72.00 x 72.00	1829 x 1829

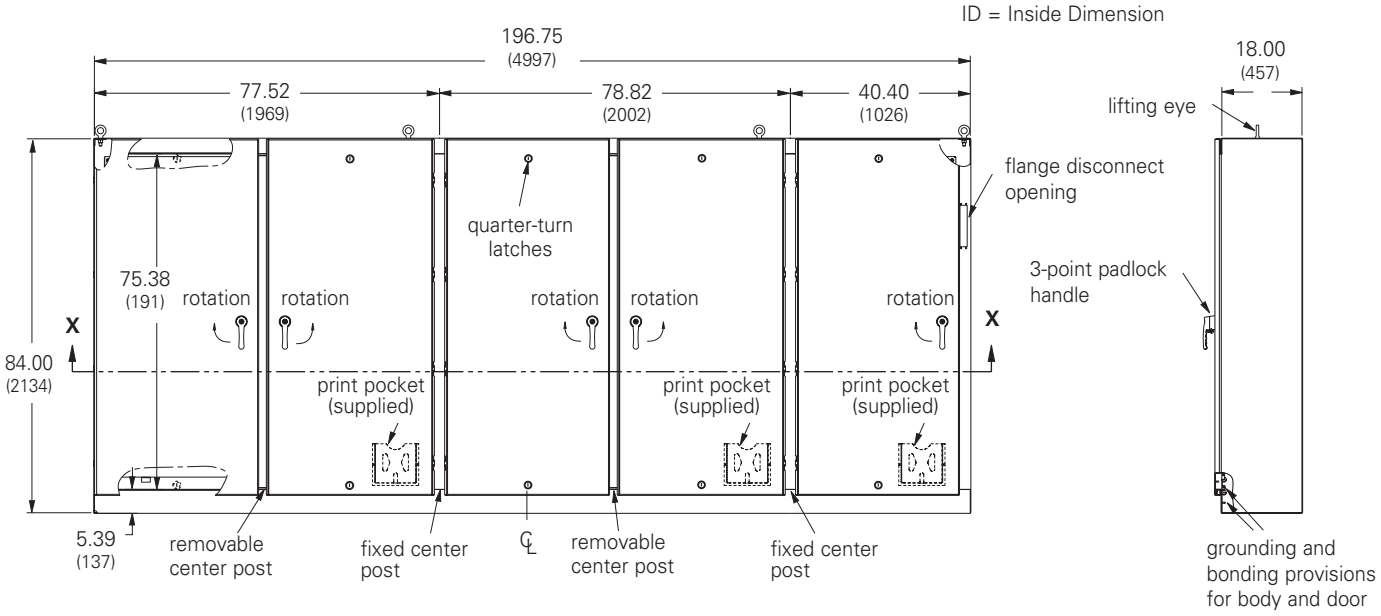

Front View **Side View**

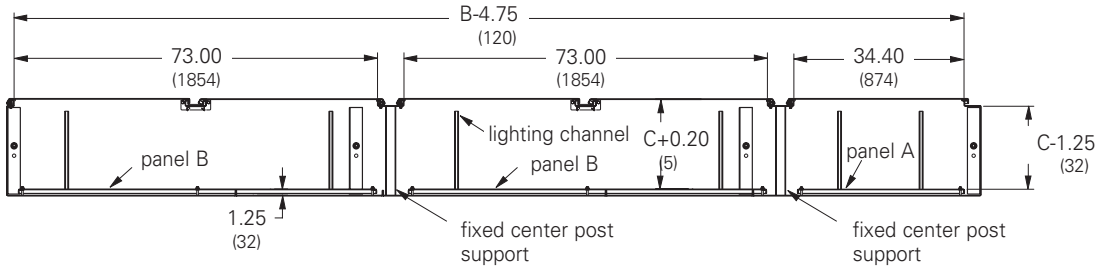

Section X-X

Notes: Dimensions are in inches. Millimeters shown are for reference only. Data subject to change without notice.

Ground-Mount Enclosures
Type 4 and 4X Heavy-Duty Single and Multi-Door
Flange-Mount Free-Standing with 3-Point Locking
Illustration Sheet

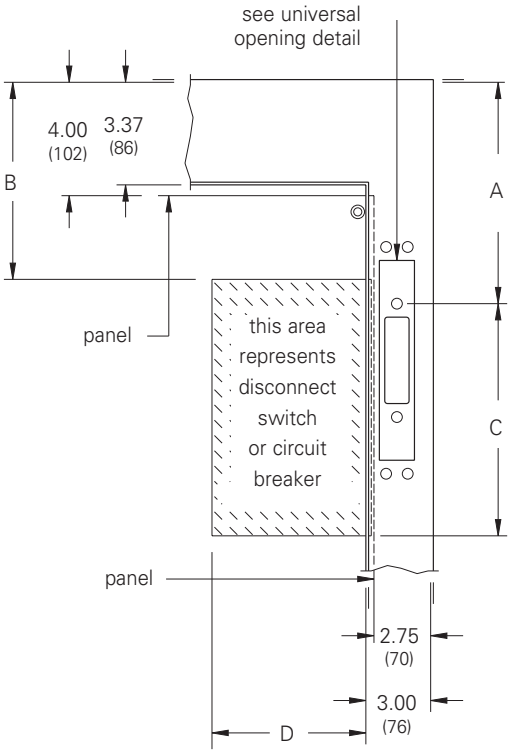

Flange Mounting
(1 and 2 door enclosures)

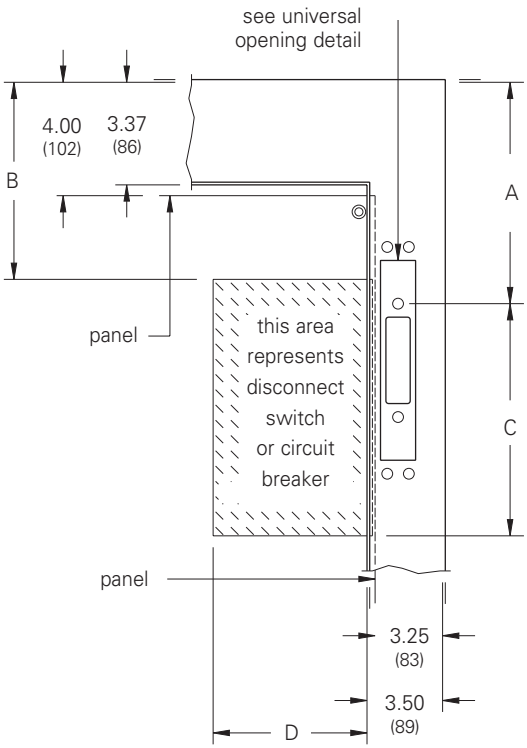

Flange Mounting
(3, 4 and 5 door enclosures)

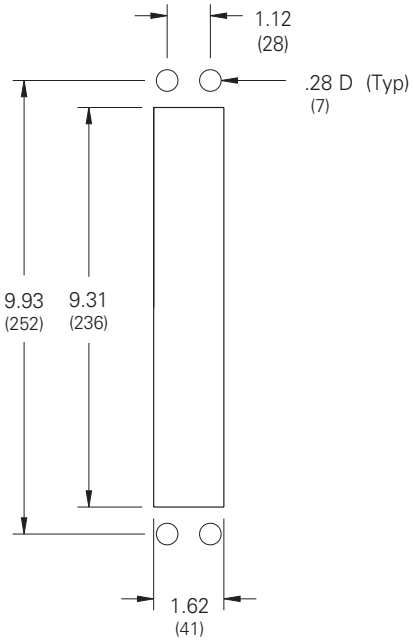

Universal Opening Detail

The dimensional information provided in these drawings is derived from information supplied by the manufacturer of the equipment to be installed. Fit and function of all equipment should be checked before and after installation to assure proper and safe operation and compliance with the applicable regulations, codes and standards.

Universal opening must be filled with an operator adapter kit for the specific brand and type of disconnect being used, (see page 451).

Important Note

When ordering flange-mounted disconnect enclosures, be sure to include all the necessary components.

1. A flange-mounted disconnect enclosure
2. Operator adapter plates MUST be ordered for the specific brand and type of disconnect being used, (see page 452)

Disconnect switch (or circuit breaker), operating handle and operating mechanism are not furnished with enclosure, see disconnect ordering information, pages 326, 332 - 339.

Notes: Refer to disconnect table for associated dimensions.
Dimensions are in inches. Millimeters shown are for reference only. Data subject to change without notice.

Ground-Mount Enclosures
Type 12 Modular Free-Standing
Data Sheet

Application
- Houses electrical controls and instruments
- Protects against circulating dust, falling dirt and dripping non-corrosive liquids

Standards
- UL 508A listed, Type 12
- CSA C22.2 No.94 certified, Type 12
- Conforms to NEMA standard for Type 12

Finish
- Wash and phosphate undercoat
- ANSI 61 gray polyester powder finish
- Panels have a white polyester powder finish

Accessories
- Channel mounting hardware
- Blank adapter plates
- Operator adapters
- Touch-up paint
- Replacement handles: deafeater handle BD-PDHB and keyed handle BD-PKHB (see pages 427 and 428).
- See Accessories section

Construction
- Enclosure and door are fabricated from code gauge steel (see appropriate charts for gauge)
- All continuous welded seams are finished smooth
- Doors are secured to the body with removable concealed hinges and a center locating 3-point key-locking and padlock handle mechanism
- Modern bevel profile on hinge side of enclosure door(s)
- Slave doors cannot open without activation of mechanical interlock but can close in any order
- Doors have an oil-resistant gasket
- Ground stud provided on door(s) and body
- Print pocket provided
- Modular design and flanged side opening provide strength and a variety of mounting arrangements
- Heavy steel stiffeners welded across the back provide enclosure rigidity
- Removable panels mounted on .375-16 collar studs and panel supports are furnished behind each door
- Large lifting eyebolts are supplied
- Two styles of enclosure construction and specific features:
  1. Single-door disconnect enclosure - Left side open. Door hinges left serving as a master door with connecting interlocks which prevent slave doors from opening first. Defeater mechanism on door requires a screwdriver to open. Universal cut-out on right side flange for disconnect operator.
  2. Two-door disconnect enclosure - Left side open. Both doors hinge left, the right side serving as the master with connecting interlocks which prevent slave doors from opening first. Defeater mechanism on door requires a screwdriver to open. Universal cut-out on right flange for disconnect operator. Center post is removable. Lighting mounting channel provided.

Discount Schedule: C2
Subclass: DOG

Important Note

When ordering modular enclosure systems, be sure to include all the necessary components.
1. Disconnect master or slave enclosure
2. Gasket kits and/or end plates (see page 330)
3. Operator adapter plates MUST be ordered for the specific brand and type of disconnect being used, (see page 452)

Disconnect switch (or circuit breaker), operating handle and operating mechanism are not furnished with enclosure, see disconnect ordering information, pages 332 - 339.

Notes: We can provide special sizes, finishes and other modifications. Consult the factory for your special requirements.

Ground-Mount Enclosures
Type 12 Modular Single-Door Free-Standing
Illustration Sheet and Catalog Number

Enclosure Catalog Number	Enclosure Size Height x Width x Depth A x B x C in.	mm	Body/Door Gauge	Panel Size Height x Width in.	mm
MFD723918-12FS	72.00 x 39.75 x 18.00	1829 x 1010 x 457	12/12	60.00 x 33.75	1524 x 857
MFD843918-12FS	84.00 x 39.75 x 18.00	2134 x 1010 x 457	12/10	72.00 x 33.75	1829 x 857
MFD843924-12FS	84.00 x 39.75 x 24.00	2134 x 1010 x 610	12/10	72.00 x 33.75	1829 x 857

ID = Inside Dimension

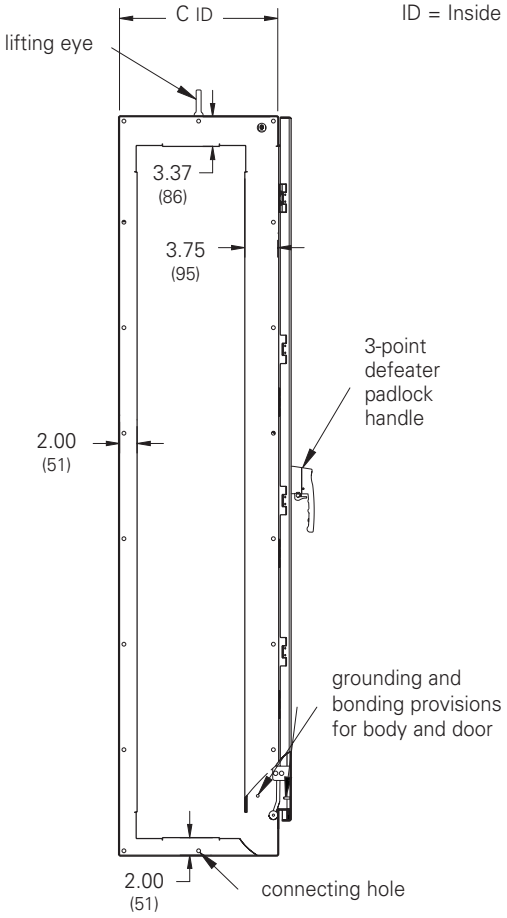

Side View

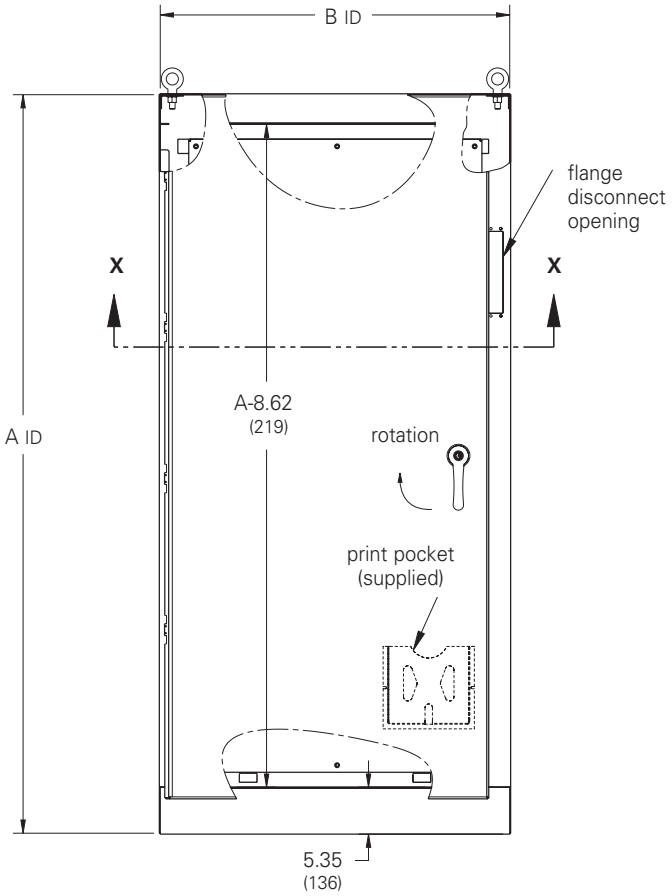

Front View

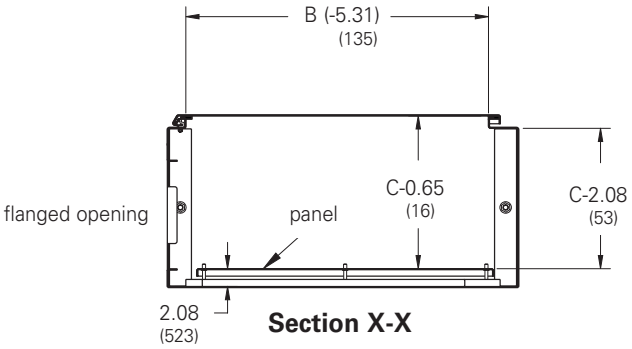

Section X-X

Notes: Four lifting eyes are furnished when C dimension is 24 (609 mm). Dimensions are in inches. Millimeters shown are for reference only. Data subject to change without notice.

Ground-Mount Enclosures
Type 12 Modular Double-Door Free-Standing
Illustration Sheet and Catalog Number

Enclosure Catalog Number	Enclosure Size Height x Width x Depth A x B x C in.	mm	Body/Door Gauge	Panel Size Height x Width in.	mm
MFD727818-12FS	72.00 x 78.00 x 18.00	1829 x 1981 x 457	12/12	60.00 x 72.00	1524 x 1829
MFD847818-12FS	84.00 x 78.00 x 18.00	2134 x 1981 x 457	12/10	72.00 x 72.00	1829 x 1829
MFD847824-12FS	84.00 x 78.00 x 24.00	2134 x 1981 x 610	12/10	72.00 x 72.00	1829 x 1829

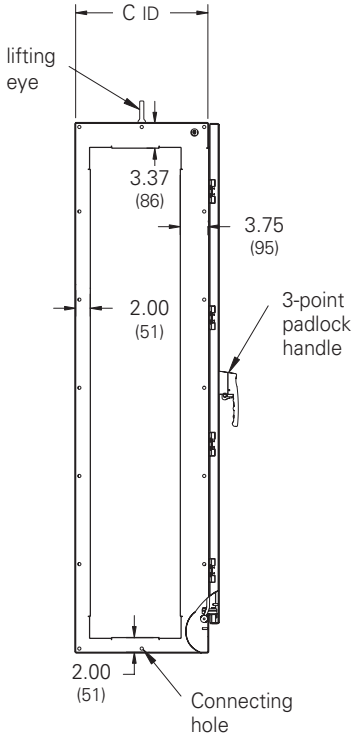

Side View

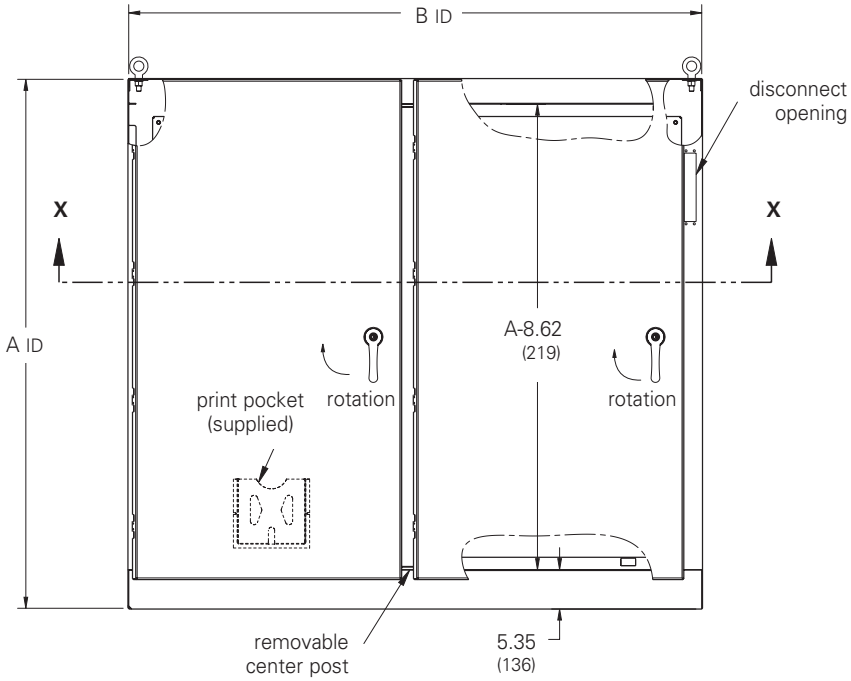

Front View

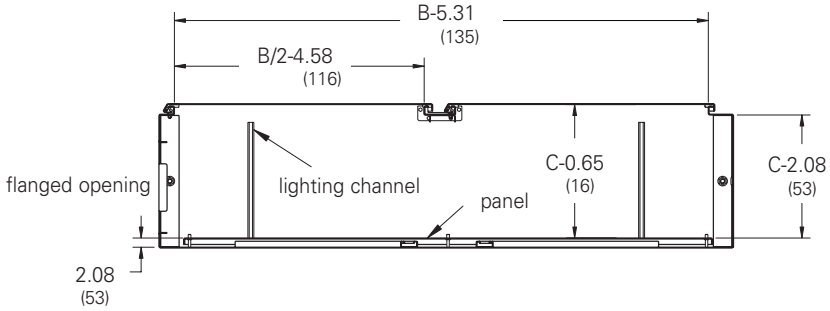

Section X-X

Notes: Four lifting eyes are furnished when C dimension is 24 (609 mm). Dimensions are in inches. Millimeters shown are for reference only. Data subject to change without notice.

Free-Standing Accessories
End Plates and Gasket Kits
Illustration Sheet and Catalog Number

Modular Accessories

Catalog Number	Size A in.	Size A mm	Size B in.	Size B mm	Fits Enclosure H x D in.	Fits Enclosure H x D mm	Fits Enclosure H x D in.	Fits Enclosure H x D mm
End Plate								
M7218-12FEK	72.00	1829	18.00	457	72.00	1829	18.00	457
M8418-12FEK	84.00	2134	18.00	457	84.00	2134	18.00	457
M8424-12FEK	84.00	2134	24.00	610	84.00	2134	24.00	610
Flat End Plate/Barrier								
M7218-12FBK	72.00	1829	18.25	464	72.00	1829	18.00	457
M8418-12FBK	84.00	2134	18.25	464	84.00	2134	18.00	457
M8424-12FBK	84.00	2134	24.25	464	84.00	2134	24.00	610
Gasket Kit								
M7218-12FGK	72.00	1829	18.00	457	72.00	1829	18.00	457
M8418-12FGK	84.00	2134	18.00	457	84.00	2134	18.00	457
M8424-12FGK	84.00	2134	24.00	610	84.00	2134	24.00	610

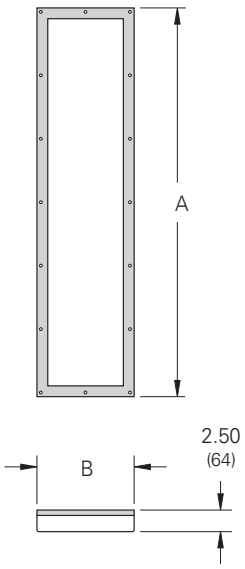

End Plate
Formed end plate and gasket used to seal open end of Modular enclosure. Includes: End Plate, Gasket and Hardware.

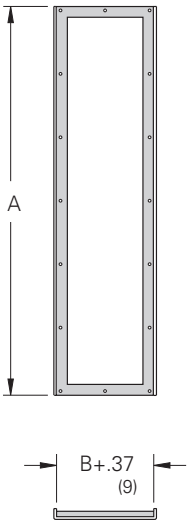

Flat End Plate
Flat end plate and gasket used to seal open end of Modular enclosure. Also can serve as a barrier when additional gasket is used. Includes: Flat End Plate, Gasket and Hardware

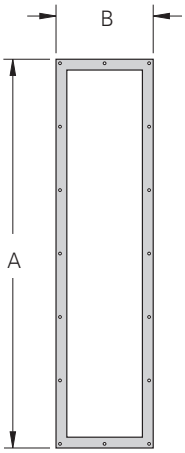

Gasket Kit
Pre-cut and pre-punched high density poron gasket is required for sealing barrier to additional modular enclosures when ganging. Includes: Gasket and Hardware.

Notes: Dimensions are in inches. Millimeters shown are for reference only. Data subject to change without notice.

Ground-Mount Enclosures
Type 12 Modular Free-Standing
Illustration Sheet

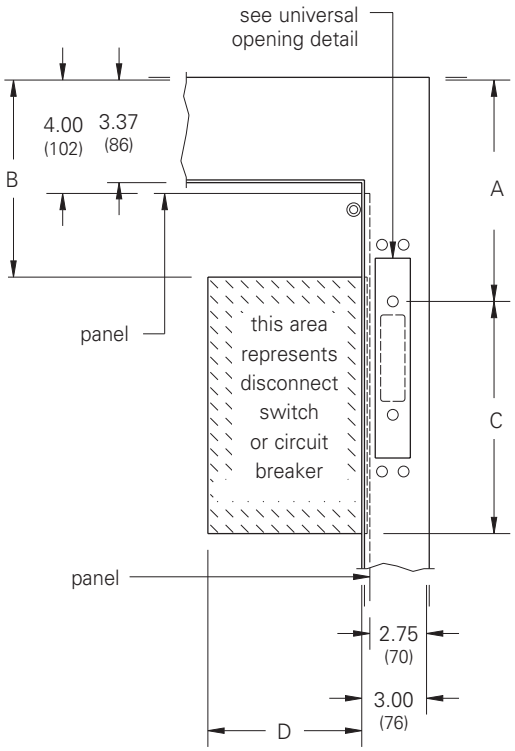

Flange Mounting

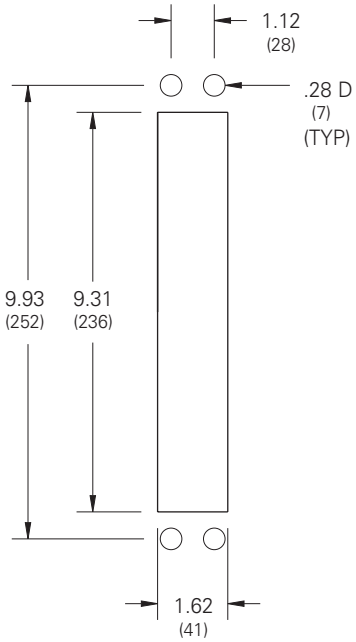

Universal Opening Detail

The dimensional information provided in this drawing is derived from information supplied by the manufacturer of the equipment to be installed. Fit and function of all equipment should be checked before and after installation to assure proper and safe operation and compliance with the applicable regulations, codes and standards.

Universal opening must be filled with an operator adapter kit for the specific brand and type of disconnect being used, (see page 451).

Important Note

When ordering modular enclosure systems, be sure to include all the necessary components.

1. Disconnect master or slave enclosure
2. Gasket kits and/or end plates (see page 330)
3. Operator adapter plates MUST be ordered for the specific brand and type of disconnect being used, (see page 452)

Disconnect switch (or circuit breaker), operating handle and operating mechanism are not furnished with enclosure, see disconnect ordering information, pages 331 - 339.

Notes: Refer to disconnect table for associated dimensions. Dimensions are in inches. Millimeters shown are for reference only. Data subject to change without notice.

Free-Standing Enclosures

Disconnect Ordering Information

Allen-Bradley® †

1494V / 1494U Disconnect Mechanism

Allen-Bradley† Mechanism for Switches	Amp	Fuse Clip Rating		Fuse Class	Enclosure Height												C		D(1)	
					72				84				90							
		Amp	Volt		A		B		A		B		A		B					
					in.	mm	in.	mm	in.	mm	in.	mm	in.	mm	in.	mm	in.	mm	in.	mm
DS30	30A	(non)	(non)	—	11.87	301	10.00	254	17.37	441	15.50	394	20.37	517	18.50	470	4.00	102	6.75	171
DS30	30A	30A	250V	H,K,R	11.87	301	10.00	254	17.37	441	15.50	394	20.37	517	18.50	470	5.25	133	6.75	171
DS30	30A	30A	600V	H,K,R	11.87	301	10.00	254	17.37	441	15.50	394	20.37	517	18.50	470	8.00	203	6.75	171
DS30	30A	30A	600V	J	11.87	301	10.00	254	17.37	441	15.50	394	20.37	517	18.50	470	5.25	133	6.75	171
DS30	30A	60A	250V	H,K	11.87	301	10.00	254	17.37	441	15.50	394	20.37	517	18.50	470	6.00	152	6.75	171
DS30	30A	60A	600V	H,K	11.87	301	10.00	254	17.37	441	15.50	394	20.37	517	18.50	470	8.50	216	6.75	171
DS30	30A	60A	600V	J	11.87	301	10.00	254	17.37	441	15.50	394	20.37	517	18.50	470	5.50	140	6.75	171
DS60	60A	(non)	(non)	—	11.87	301	9.87	251	17.37	441	15.37	390	20.37	517	18.37	467	4.00	102	6.75	171
DS60	60A	30A	600V	H,K,R	11.87	301	9.87	251	17.37	441	15.37	390	20.37	517	18.37	467	8.00	203	6.75	171
DS60	60A	60A	250V	H,K,R	11.87	301	9.87	251	17.37	441	15.37	390	20.37	517	18.37	467	6.00	152	6.75	171
DS60	60A	60A	600V	H,K,R	11.87	301	9.87	251	17.37	441	15.37	390	20.37	517	18.37	467	8.50	216	6.75	171
DS60	60A	60A	600V	J	11.87	301	9.87	251	17.37	441	15.37	390	20.37	517	18.37	467	5.50	140	6.75	171
DS60	60A	100A	250V	H,K	11.87	301	9.87	251	17.37	441	15.37	390	20.37	517	18.37	467	8.50	216	6.75	171
DS60	60A	100A	600V	H,K	11.87	301	9.87	251	17.37	441	15.37	390	20.37	517	18.37	467	10.50	267	6.75	171
DS60	60A	100A	600V	J	11.87	301	9.87	251	17.37	441	15.37	390	20.37	517	18.37	467	7.25	184	6.75	171
DS100	100A	(non)	(non)	—	11.87	301	8.37	213	17.37	441	13.87	390	20.37	517	16.87	428	4.75	121	8.00	203
DS100	100A	100A	250V	H,K,R	11.87	301	8.37	213	17.37	441	13.87	390	20.37	517	16.87	428	10.50	267	8.00	203
DS100	100A	100A	600V	H,K,R	11.87	301	8.37	213	17.37	441	13.87	390	20.37	517	16.87	428	12.50	318	8.00	203
DS100	100A	100A	600V	J	11.87	301	8.37	213	17.37	441	13.87	390	20.37	517	16.37	416	9.25	235	8.00	203
DS100	100A	200A	250V	H,K	11.87	301	8.37	213	17.37	441	13.87	390	20.37	517	16.87	428	11.25	286	8.00	203
DS100	100A	200A	600V	H,K	11.87	301	8.37	213	17.37	441	13.87	390	20.37	517	16.87	428	13.75	349	8.00	203
DS100	100A	200A	600V	J	11.87	301	8.37	213	17.37	441	13.87	390	20.37	517	16.87	428	10.00	254	8.00	203
DS200	200A	(non)	(non)	—	10.43	265	6.00	152	15.93	405	11.50	292	18.93	481	14.50	368	10.00	254	11.00	279
DS200	200A	200A	250V	H,K,R	10.43	265	6.00	152	15.93	405	11.50	292	18.93	481	14.50	368	15.00	381	11.00	279
DS200	200A	200A	600V	H,K,R	10.43	265	6.00	152	15.93	405	11.50	292	18.93	481	14.50	368	17.25	438	11.00	279
DS200	200A	200A	600V	J	10.43	265	6.00	152	15.93	405	11.50	292	18.93	481	14.50	368	13.50	343	11.00	279
DS200	200A	400A	250V	H,K	10.43	265	6.00	152	15.93	405	11.50	292	18.93	481	14.50	368	15.75	400	11.00	279
DS200	200A	400A	600V	H,K	10.43	265	6.00	152	15.93	405	11.50	292	18.93	481	14.50	368	18.75	476	11.00	279
DS200	200A	400A	600V	J	10.43	265	6.00	152	15.93	405	11.50	292	18.93	481	14.50	368	14.25	362	11.00	279
DS400	400A	(non)	(non)	—	*	*	*	*	15.93	405	9.62	244	18.93	481	12.62	321	10.75	273	11.00	279
DS400	400A	400A	250V	H,K,R	*	*	*	*	15.93	405	9.62	244	18.93	481	12.62	321	16.25	413	11.00	279
DS400	400A	400A	600V	H,K,R	*	*	*	*	15.93	405	9.62	244	18.93	481	12.62	321	19.25	489	11.00	279
DS400	400A	400A	600V	J	*	*	*	*	15.93	405	9.62	244	18.93	481	12.62	321	14.75	375	11.00	279

Allen-Bradley† Mechanism for Circuit Breakers	Amp	Circuit Breaker Type		Enclosure Height												C		D(1)	
				72				84				90							
		Manufacturer	Frame(s)	A		B		A		B		A		B					
				in.	mm	in.	mm	in.	mm	in.	mm	in.	mm	in.	mm	in.	mm	in.	mm
M40	150A	General Electric	TED,THED,TEC	11.87	301	11.25	286	17.37	441	16.75	425	20.37	517	19.75	502	5.75	146	4.75	121
M40	150A	Westinghouse	F (series C)	11.87	301	11.25	286	17.37	441	16.75	425	20.37	517	19.75	502	5.00	127	4.75	121
M50	250A	Westinghouse	J (series C)	11.87	301	10.87	276	17.37	441	16.37	416	20.37	517	19.37	492	9.75	248	5.00	127
M60	400A	Westinghouse	K (series C)	11.87	301	10.62	270	17.37	441	16.12	409	20.37	517	19.12	486	9.75	248	6.25	159

* Do not install disconnects in this height enclosure

(1) Dimension "D" does not include space for auxiliary switches.

The dimensional information provided in this table is derived from information supplied by the manufacturer of the equipment to be installed. Fit and function of all equipment should be checked before and after installation to assure proper and safe operation and compliance with the applicable regulations, codes and standards.

† Marks are the property of their respective owners.

Notes: Dimensions are in inches. Millimeters shown are for reference only. Data subject to change without notice.

Free-Standing Enclosures

Disconnect Ordering Information

Allen-Bradley†

1494F Disconnect Mechanism

Allen-Bradley† Mechanism for Switches	Amp	Fuse Clip Rating		Fuse Class	Enclosure Height												C		D(1)	
					72				84				90							
					A		B		A		B		A		B					
		Amp	Volt	in.	mm	in.	mm	in.	mm	in.	mm	in.	mm	in.	mm	in.	mm	in.	mm	
N30	30A	(non)	(non)	—	9.87	251	9.37	238	15.37	390	14.87	378	18.37	467	17.87	454	4.75	121	6.50	165
NF30	30A	30A	250V	H,K,R	9.87	251	9.37	238	15.37	390	14.87	378	18.37	467	17.87	454	6.50	165	6.50	165
NF30	30A	30A	600V	H,K,R	9.87	251	9.37	238	15.37	390	14.87	378	17.37	441	17.87	454	9.25	235	6.50	165
NF30	30A	30A	600V	J	9.87	251	9.37	238	15.37	390	14.87	378	18.37	467	17.87	454	6.50	165	6.50	165
NF30	30A	60A	250V	H,K,R	9.87	251	9.37	238	15.37	390	14.87	378	18.37	467	17.87	454	7.25	184	6.50	165
NF30	30A	60A	600V	H,K,R	9.87	251	9.37	238	15.37	390	14.87	378	18.37	467	17.87	454	9.75	248	6.50	165
NF30	30A	60A	600V	J	9.87	251	9.37	238	15.37	390	14.87	378	18.37	467	17.87	454	6.75	171	6.50	165
N60	60A	(non)	(non)	—	9.87	251	8.62	219	15.37	390	14.12	359	18.37	467	17.12	435	4.75	121	6.50	165
NF60	60A	30A	600V	H,K,R	9.87	251	8.62	219	15.37	390	14.12	359	18.37	467	17.12	435	10.50	267	6.50	165
NF60	60A	60A	250V	H,K,R	9.87	251	8.82	219	15.37	390	14.12	359	18.37	467	17.12	435	8.50	216	6.50	165
NF60	60A	60A	600V	H,K,R	9.87	251	8.62	219	15.37	390	14.12	359	18.37	467	17.12	435	11.00	279	6.50	165
NF60	60A	60A	600V	J	9.87	251	8.62	219	15.37	390	14.12	359	18.37	467	17.12	435	57.75	1467	6.50	165
NF60	60A	100A	250V	H,K,R	9.87	251	8.62	219	15.37	390	14.12	359	18.37	467	17.12	435	11.00	279	6.50	165
NF60	60A	100A	600V	H,K,R	9.87	251	8.62	219	15.37	390	14.12	359	18.37	467	17.12	435	13.00	330	6.50	165
NF60	60A	100A	600V	J	9.87	251	8.62	219	15.37	390	14.12	359	18.37	467	17.12	435	9.75	248	6.50	165
N100	100A	(non)	(non)	—	9.87	251	6.75	171	15.37	390	12.25	311	18.37	467	15.25	387	4.75	121	7.25	184
NF100	100A	100A	250V	H,K,R	9.87	251	6.75	171	15.37	390	12.25	311	18.37	467	15.25	387	11.50	292	7.50	191
NF100	100A	100A	600V	H,K,R	9.87	251	6.75	171	15.37	390	12.25	311	18.37	467	15.25	387	13.50	343	7.50	191
NF100	100A	100A	600V	J	9.87	251	6.75	171	15.37	390	12.25	311	18.37	467	15.25	387	10.25	260	7.50	191
NF100	100A	200A	250V	H,K,R	9.87	251	6.75	171	15.37	390	12.25	311	18.37	467	15.25	387	12.25	311	7.75	197
NF100	100A	200A	600V	H,K,R	9.87	251	6.75	171	15.37	390	12.25	311	18.37	467	15.25	387	14.75	375	7.75	197
NF100	100A	200A	600V	J	9.87	251	6.75	171	15.37	390	12.25	311	18.37	467	15.25	387	11.00	279	7.75	197
N200	200A	(non)	(non)	—	8.56	217	5.12	130	14.06	357	10.62	270	17.06	433	13.62	346	7.25	184	10.50	267
NF200	200A	200A	250V	H,K,R	8.56	217	5.12	130	14.06	357	10.62	270	17.06	433	13.62	346	15.00	381	10.50	267
NF200	200A	200A	600V	H,K,R	8.56	217	5.12	130	14.06	357	10.62	270	17.06	433	13.62	346	17.50	445	10.50	267
NF200	200A	200A	600V	J	8.56	217	5.12	130	14.06	357	10.62	270	17.06	433	13.62	346	13.75	349	10.50	267
NF200	200A	400A	250V	H,K,R	8.56	217	5.12	130	14.06	357	10.62	270	17.06	433	13.62	346	16.50	419	11.00	279
NF200	200A	400A	600V	H,K,R	8.56	217	5.12	130	14.06	357	10.62	270	17.06	433	13.62	346	19.50	495	11.00	279
NF200	200A	400A	600V	J	8.56	217	5.12	130	14.06	357	10.62	270	17.06	433	13.62	346	15.00	381	11.00	279

1494D Disconnect Mechanism

Allen-Bradley† Mechanism for Circuit Breakers	Amp	Circuit Breaker Type		Enclosure Height												C		D(1)	
				60				72				90							
				A		B		A		B		A		B					
		Manufacturer	Frame(s)	in.	mm	in.	mm	in.	mm	in.	mm	in.	mm	in.	mm	in.	mm	in.	mm
N4/N40	150A	General Electric	TED,THED,TEC	9.87	251	9.25	235	15.37	390	14.75	375	18.37	467	17.75	451	5.87	149	4.62	117
N5/N55	225A	General Electric	TFK,THFK,TFC	9.87	251	8.50	216	15.37	390	14.00	356	18.37	467	17.00	432	8.87	225	4.75	121
N4/N40	150A	Westinghouse	F (series C)	9.87	251	9.25	235	15.37	390	14.75	375	18.37	467	17.75	451	5.87	149	4.62	117
N5/N50	250A	Westinghouse	J (series C)	9.87	251	8.50	216	15.37	390	14.00	356	18.37	467	17.00	432	8.87	225	4.75	121
N5/N60	400A	Westinghouse	K (series C)	9.87	251	8.50	216	15.37	390	14.00	356	18.37	467	17.00	432	8.87	225	5.87	149

* Do not install disconnects in this height enclosure

(1) Dimension "D" does not include space for auxiliary switches.

The dimensional information provided in this table is derived from information supplied by the manufacturer of the equipment to be installed. Fit and function of all equipment should be checked before and after installation to assure proper and safe operation and compliance with the applicable regulations, codes and standards.

† Marks are the property of their respective owners.

Notes: Dimensions are in inches. Millimeters shown are for reference only. Data subject to change without notice.

Free-Standing Enclosures

Disconnect Ordering Information

Cutler-Hammer® †

C361 Disconnect Mechanism

Cutler-Hammer† Mechanism for Switches	Amp	Fuse Clip Rating		Fuse Class	Enclosure Height												C		D(1)	
					72				84				90							
		Amp	Volt		A		B		A		B		A		B					
					in.	mm	in.	mm	in.	mm	in.	mm	in.	mm	in.	mm	in.	mm	in.	mm
NC	30A	(non)	(non)	—	11.87	301	10.50	267	17.37	441	16.00	406	20.37	517	19.00	483	4.75	121	6.25	159
SC21	30A	30A	250V	H,K,R	11.87	301	10.50	267	17.37	441	16.00	406	20.37	517	19.00	483	7.75	197	6.25	159
SC61	30A	30A	600V	H,K,R	11.87	301	10.50	267	17.37	441	16.00	406	20.37	517	19.00	483	7.75	197	6.25	159
SC61	30A	60A	250V	H,K,R	11.87	301	10.50	267	17.37	441	16.00	406	20.37	517	19.00	483	8.25	210	6.25	159
ND	60A	(non)	(non)	—	11.87	301	10.50	267	17.37	441	16.00	406	20.37	517	19.00	483	4.75	121	6.25	159
SD22	60A	30A	600V	J	11.87	301	10.50	267	17.37	441	16.00	406	20.37	517	19.00	483	7.75	197	6.25	159
SD22	60A	60A	250V	H,K,R	11.87	301	10.50	267	17.37	441	16.00	406	20.37	517	19.00	483	8.25	210	6.25	159
SD62	60A	60A	600V	H,K,R	11.87	301	10.50	267	17.37	441	16.00	406	20.37	517	19.00	483	8.25	210	6.25	159
SD62	60A	60A	600V	J	11.87	301	10.50	267	17.37	441	16.00	406	20.37	517	19.00	483	8.00	203	6.25	159
NE	100A	(non)	(non)	—	11.87	301	10.12	257	17.37	441	15.62	397	20.37	517	18.62	473	4.25	108	7.50	191
SE263	100A	100A	250V	H,K,R	11.87	301	10.12	257	17.37	441	15.62	397	20.37	517	18.62	473	9.00	229	7.50	191
SE263	100A	100A	600V	H,K,R	11.87	301	10.12	257	17.37	441	15.62	397	20.37	517	18.62	473	9.00	229	7.50	191
SE263	100A	100A	600V	J	11.87	301	10.12	257	17.37	441	15.62	397	20.37	517	18.62	473	7.75	197	7.50	191
NF	200A	(non)	(non)	—	11.87	301	8.12	257	17.37	441	13.62	397	20.37	517	16.62	422	13.25	337	10.25	260
SF264	200A	200A	250V	H,K,R	11.87	301	8.12	257	17.37	441	13.62	397	20.37	517	16.62	422	13.25	337	10.25	260
SF264	200A	200A	600V	H,K,R	11.87	301	8.12	257	17.37	441	13.62	397	20.37	517	16.62	422	13.25	337	10.25	260

C371 Disconnect Mechanism

Cutler-Hammer† Mechanism for Circuit Breakers	Amp	Circuit Breaker Type		Enclosure Height												C		D(1)	
				72				84				90							
		Manufacturer	Frame(s)	A		B		A		B		A		B					
				in.	mm	in.	mm	in.	mm	in.	mm	in.	mm	in.	mm	in.	mm	in.	mm
C371E	150A	Cutler-Hammer	HMCP,FS,FH	11.87	301	11.62	295	17.37	441	17.12	435	20.37	517	20.12	511	6.00	152	5.75	146
C371F (1)	225A	Cutler-Hammer	HMCP,JS,JH,JL	11.87	301	11.50	292	17.37	441	17.00	432	20.37	517	20.00	508	11.00	279	8.25	210
C371F (1)	400A	Cutler-Hammer	HMCP,KS,KH	11.87	301	11.00	279	17.37	441	16.50	419	20.37	517	19.50	495	9.75	248	8.25	210
C371G (2)	600A	Cutler-Hammer	LS,LH	11.87	301	9.37	238	17.37	441	14.87	378	20.37	517	17.87	454	8.50	216	12.00	305
C371K (3)	800A	Cutler-Hammer	MS,MH	*	*	*	*	17.37	441	11.37	289	20.37	517	14.37	365	10.25	260	12.00	305
C371K (3)	1200A	Cutler-Hammer	NS,NH	*	*	*	*	17.37	441	11.37	289	20.37	517	14.37	365	10.25	260	12.00	305
C371E	150A	Westinghouse	F (series C)	11.87	301	11.62	295	17.37	441	17.12	435	20.37	517	20.12	511	6.00	152	5.75	146
C371F (1)	250A	Westinghouse	J (series C)	11.87	301	11.50	292	17.37	441	17.00	432	20.37	517	20.00	508	9.00	229	8.25	210
C371F (1)	400A	Westinghouse	K (series C)	11.87	301	11.00	279	17.37	441	16.50	419	20.37	517	19.50	495	9.75	248	8.25	210
C371G (2)	600A	Westinghouse	LA,LC	11.87	301	9.37	238	17.37	441	14.87	378	20.37	517	17.87	454	8.50	216	12.00	305
C371K (3)	800A	Westinghouse	MC	*	*	*	*	17.37	441	11.37	289	20.37	517	14.37	365	10.25	260	12.00	305
C371K (3)(4)(5)	12000A	Westinghouse	NC	*	*	*	*	17.37	441	11.37	289	20.37	517	14.37	365	10.25	260	12.00	305

* Do not install disconnects in this height enclosure

(1) Wire bending space "B" does not allow the use of cable larger than 300 MCM in 72H enclosures.
(2) Wire bending space "B" does not allow the use of cable larger than 250 MCM in 72H enclosures.
(3) Wire bending space "B" does not allow the use of cable larger than 300 MCM in 84H enclosures.
(4) Wire bending space "B" does not allow the use of 4 cables per terminal larger than 350 MCM in 90H enclosures.
(5) Wire bending space "B" does not allow the use of Westinghouse terminals TA1201NB1 in 84H or 90H enclosures

The dimensional information provided in this table is derived from information supplied by the manufacturer of the equipment to be installed. Fit and function of all equipment should be checked before and after installation to assure proper and safe operation and compliance with the applicable regulations, codes and standards.

† Marks are the property of their respective owners.

Notes: Dimensions are in inches. Millimeters shown are for reference only. Data subject to change without notice.

Disconnect Enclosures

Free-Standing Enclosures

Disconnect Ordering Information
General Electric†

TDA † Disconnects

General Electric† Mechanism for Switches	Amp	Fuse Clip Rating		Fuse Class	Enclosure Height												C		D	
					72				84				90							
		Amp	Volt		A		B		A		B		A		B					
					in.	mm	in.	mm	in.	mm	in.	mm	in.	mm	in.	mm	in.	mm	in.	mm
NC	30A	(non)	(non)	—	11.87	301	10.50	267	17.37	441	16.00	406	20.37	517	19.00	483	4.75	121	6.25	159
TDOM1A	30A	(non)	(non)	—	11.87	301	12.37	314	17.37	441	17.87	45	20.37	517	20.87	530	7.00	178	5.50	140
TDOM1A	30A	30A	250V	H,R	11.87	301	12.37	314	17.37	441	17.87	454	20.37	517	20.87	530	7.00	178	5.50	140
TDOM1B	30A	30A	600V	H,R	11.87	301	12.37	314	17.37	441	17.87	454	20.37	517	20.87	530	11.50	292	5.50	140
TDOM1B	30A	60A	250V	H,R	11.87	301	12.37	314	17.37	441	17.87	454	20.37	517	20.87	530	11.50	292	5.50	140
TDOM1B	30A	60A	600V	H,R	11.87	301	12.37	314	17.37	441	17.87	454	20.37	517	20.87	530	11.50	292	5.50	140
TDOM1A	60A	(non)	(non)	—	11.87	301	12.37	314	17.37	441	17.87	454	20.37	517	20.87	530	7.00	178	5.50	140
TDOM1B	60A	60A	250V	H,R	11.87	301	12.37	314	17.37	441	17.87	454	20.37	517	20.87	530	11.50	292	5.50	140
TDOM1B	60A	60A	600V	H,R	11.87	301	12.37	314	17.37	441	17.87	454	20.37	517	20.87	530	11.50	292	5.50	140
TDOM1B	60A	100A	250V	H,R	11.87	301	12.37	314	17.37	441	17.87	454	20.37	517	20.87	530	11.50	292	5.50	140
TDOM1B	60A	100A	600V	H,R	11.87	301	12.37	314	17.37	441	17.87	454	20.37	517	20.87	530	11.50	292	5.50	140
TDOM1A	100A	(non)	(non)	—	11.87	301	12.37	314	17.37	441	17.87	454	20.37	517	20.87	530	7.00	178	5.50	140
TDOM1B	100A	100A	250V	H,R	11.87	301	12.37	314	17.37	441	17.87	454	20.37	517	20.87	530	11.50	292	5.50	140
TDOM1B	100A	100A	600V	H,R	11.87	301	12.37	314	17.37	441	17.87	454	20.37	517	20.87	530	11.50	292	5.50	140
TDOM1B	100A	200A	250V	H,R	11.87	301	12.37	314	17.37	441	17.87	454	20.37	517	20.87	530	11.50	292	5.50	140
TDOM1B	100A	200A	600V	H,R	11.87	301	12.37	314	17.37	441	17.87	454	20.37	517	20.87	530	11.50	292	5.50	140
TDOM2	200A	(non)	(non)	—	11.87	301	9.75	248	17.37	441	15.25	387	20.37	517	18.25	464	7.00	178	9.25	235
TDOM2	200A	200A	250V	H,R	11.87	301	9.75	248	17.37	441	15.25	387	20.37	517	18.25	464	15.50	394	9.25	235
TDOM2	200A	200A	600V	H,R	11.87	301	9.75	248	17.37	441	15.25	387	20.37	517	18.25	464	15.50	394	9.25	235

General Electric† Mechanism for Circuit Breakers	Amp	Circuit Breaker Type	Enclosure Height												C		D	
			72				84				90							
			A		B		A		B		A		B					
			in.	mm	in.	mm	in.	mm	in.	mm	in.	mm	in.	mm	in.	mm	in.	mm
TDOM1A	150A	TEB,TEC,TED,THED	11.87	301	11.25	286	17.37	441	16.75	425	20.37	517	19.75	502	7.00	178	5.50	140
TDOM1B	150A	TB1,TEC,TECL	11.87	301	11.25	286	17.37	441	16.75	425	20.37	517	19.75	502	11.50	292	5.50	140
TDOM1C	150A	TEL	11.87	301	11.25	286	17.37	441	16.75	425	20.37	517	19.75	502	7.00	178	5.50	140
TDOM1D	150A	THCL1	11.87	301	9.87	251	17.37	441	15.37	390	20.37	517	18.37	467	7.00	178	5.50	140
TDOM3	225A	TFJ,TFK,THFK,TFL	11.87	301	10.87	276	17.37	441	16.37	416	20.35	517	19.37	492	10.50	267	6.00	152
TDOM4	400A	TJJ,TJK4,THJK4,TJL4V	11.87	301	10.00	254	17.37	441	15.50	394	20.35	517	18.50	470	8.25	210	9.50	241
TDOM4	600A	TJK6,THJK6,TJ4V,TJL4V	11.87	301	10.00	254	17.37	441	15.50	394	20.35	517	18.50	470	8.25	210	9.50	241
TDOM5	400A	TB4,TJH6S	11.87	301	10.00	254	17.37	441	15.50	394	20.35	517	18.50	470	14.25	362	9.50	241
TDOM6	225A	TLB2,THLC2	*	*	*	*	17.37	441	14.87	378	20.37	517	17.87	454	11.75	298	9.50	241
TDOM6	400A	TLB4,THLC4	*	*	*	*	17.37	441	13.50	343	20.37	517	16.50	419	11.75	298	9.50	241
TDOM6	800A	TKMA,THKMA,TK4V	*	*	*	*	*	*	*	*	20.37	517	17.87	454	11.75	298	9.50	241
TDOM6	1200A	TK4V,THK4V	*	*	*	*	*	*	*	*	20.37	517	17.87	454	11.75	298	9.50	241
TDOM7	600A	TB6	*	*	*	*	17.37	*	11.75	298	20.37	517	14.75	375	18.25	464	9.50	241
TDOM7	800A	TB8	*	*	*	*	17.37	*	11.75	298	20.37	517	14.75	375	18.25	464	9.50	241
TDOM7	1200A	TKL12S	*	*	*	*	*	*	*	*	20.37	517	14.75	375	18.25	464	9.50	241

* Do not install disconnects in this height enclosure.

The dimensional information provided in this table is derived from information supplied by the manufacturer of the equipment to be installed. Fit and function of all equipment should be checked before and after installation to assure proper and safe operation and compliance with the applicable regulations, codes and standards.

† Marks are the property of their respective owners.

Notes: Dimensions are in inches. Millimeters shown are for reference only. Data subject to change without notice.

Free-Standing Enclosures

Disconnect Ordering Information

I-T-E Siemens® †

MAX-FLEX† Disconnect Mechanism

Encl. Depth	I-T-E† Mechanism for Circuit Breakers	Cable Length	Amp	Circuit Breaker Frame	Device Height		Enclosure Height A 72		84		90		C(1) nom		min		max		D(2) min		max	
					in.	mm	in.	mm	in.	mm	in.	mm	in.	mm	in.	mm	in.	mm	in.	mm	in.	mm
18	FHOE036	36	125A	ED	6.37	162	11.87	301	17.37	441	20.37	517	5.37	136	-2.75	-70	13.50	343	3.00	76	9.75	248
	FHOE036	36	125A	CED	9.62	244	11.87	301	17.37	441	20.37	517	8.50	216	.06	2	16.87	428	3.00	76	9.75	248
	FHOF036	36	250A	FD	9.50	241	11.87	301	17.37	441	20.37	517	5.62	143	2.43	62	13.87	352	4.50	114	8.50	216
	FHOF036	36	250A	CFD	14.12	359	11.87	301	17.37	441	20.37	517	10.25	260	7.25	184	18.62	473	4.50	114	8.50	216
	FHOJ036	36	400A, 600A	JD, LD	11.00	279	11.87	301	17.37	441	20.37	517	5.25	133	-2.87	-73	13.43	341	7.50	191	10.12	257
	FHOJ036	36	400A, 600A	CJD	17.87	454	11.87	301	17.37	441	20.37	517	12.12	308	4.12	105	20.37	517	7.50	191	10.12	257
20	FHOE036	36	125A	ED	6.37	162	11.87	301	17.37	441	20.37	517	5.37	136	1.37	35	10.75	273	3.00	76	6.37	162
	FHOE036	36	125A	CED	9.62	244	11.87	301	17.37	441	20.37	517	8.50	216	4.62	117	14.00	356	3.00	76	6.37	162
	FHOF036	36	250A	FD	9.50	241	11.87	301	17.37	441	20.37	517	5.62	143	1.62	41	11.00	356	4.50	114	5.50	140
	FHOF036	36	250A	CFD	14.12	359	11.87	301	17.37	441	20.37	517	10.25	260	6.43	163	15.87	403	4.50	114	5.50	140
	FHOJ036	36	400A, 600A	JD, LD	11.00	279	11.87	301	17.37	441	20.37	517	5.25	133	0.00	0	10.62	270	7.50	191	7.25	184
	FHOJ036	36	400A, 600A	CJD	17.87	454	11.87	301	17.37	441	20.37	517	12.12	308	6.93	176	17.50	445	7.50	191	7.25	184
18	*	48	125A	ED	6.37	162	11.87	301	17.37	441	20.37	517	5.37	136	-15.37	-390	26.25	667	3.00	76	24.43	621
	*	48	125A	CED	9.62	244	11.87	301	17.37	441	20.37	517	8.50	216	-12.00	-305	29.50	749	3.00	76	24.43	621
	*	48	250A	FD	9.50	241	11.87	301	17.37	441	20.37	517	5.62	143	-15.00	-381	26.50	673	4.50	114	23.00	584
	*	48	250A	CFD	14.12	359	11.87	301	17.37	441	20.37	517	10.25	260	-10.25	-260	30.37	771	4.50	114	23.00	584
	*	48	400A, 600A	JD, LD	11.00	279	11.87	301	17.37	441	20.37	517	5.25	133	-15.43	-393	26.12	663	7.50	191	24.50	622
	*	48	400A, 600A	CJD	17.87	454	11.87	301	17.37	441	20.37	517	12.12	308	-8.50	-216	33.00	838	7.50	191	24.50	622
	FHON048	48	800A, 1200A	MD, ND	16.00	406	11.87	301	17.37	441	20.37	517	8.12	206	-5.12	-130	21.43	544	9.00	229	20.50	521
20	*	48	125A	ED	6.37	162	11.87	301	17.37	441	20.37	517	5.37	136	-14.87	-378	25.25	641	3.00	76	23.43	595
	*	48	125A	CED	9.62	244	11.87	301	17.37	441	20.37	517	8.50	216	-11.50	-292	28.50	724	3.00	76	23.43	595
	*	48	250A	FD	9.50	241	11.87	301	17.37	441	20.37	517	5.62	143	-14.50	-368	25.50	648	4.50	114	22.00	559
	*	48	250A	CFD	14.12	359	11.87	301	17.37	441	20.37	517	10.25	260	-9.75	-248	30.37	771	4.50	114	22.00	559
	*	48	400A, 600A	JD, LD	11.00	279	11.87	301	17.37	441	20.37	517	5.25	133	-14.93	-379	25.12	638	7.50	191	23.62	600
	*	48	400A, 600A	CJD	17.87	454	11.87	301	17.37	441	20.37	517	12.12	308	-8.00	-203	32.00	813	7.50	191	23.62	600
	FHON048	48	800A 1200A	MD, ND	16.00	406	11.87	301	17.37	441	20.37	517	8.12	206	-5.12	-130	20.93	532	9.00	229	21.00	533
24	*	48	125A	ED	6.37	162	11.87	301	17.37	441	20.37	517	5.37	136	-13.37	-340	23.25	591	3.00	76	20.62	524
	*	48	125A	CED	9.62	244	11.87	301	17.37	441	20.37	517	8.50	216	-10.00	-254	26.50	673	3.00	76	20.62	524
	*	48	250A	FD	9.50	241	11.87	301	17.37	441	20.37	517	5.62	143	-13.00	-330	23.50	597	4.50	114	19.37	492
	*	48	250A	CFD	14.12	359	11.87	301	17.37	441	20.37	517	10.25	260	-8.25	-210	28.37	721	4.50	114	19.37	492
	*	48	400A, 600A	JD, LD	11.00	279	11.87	301	17.37	441	20.37	517	5.25	133	-13.43	-341	23.12	587	7.50	191	20.93	532
	*	48	400A, 600A	CJD	17.87	454	11.87	301	17.37	441	20.37	517	12.12	308	-6.50	-165	30.00	762	7.50	191	20.93	532
	FHON048	48	800A, 1200A	MD,ND	26.00	406	11.87	301	17.37	441	20.37	517	8.12	206	-3.12	-79	19.93	506	9.00	229	20.50	521

I-T-E SIEMENS † MAX-FLEX † Disconnect Mechanism

Disconnect Mechanism	Cable Length	Circuit Breaker Types
FHOE036	36	ED2 ,ED4, ED6, HED4, HED6, ED6ETI
FHOE036	36	CED6, CED6ETI
FHOF036	36	FD6, FXD6, HFD6, FXD6ETI
FHOF036	36	CFD6, CFD6ETI
FHOJ036	36	JD2, JD6, JXD6, HJD6, JXD6ETI, LD6,LXD6, HLD6, LXD6ETI, SHJD6, SLD6, SHLD6
FHOJ036	36	CJD6, CJD6ETI, CLD6, CLD6ETI,SCJD6,SCLD6
FHON048	48	MD6, HMD6, CMD6, MXD6ETI, CMD6ETI, SMD6, SHMD6, SCMD6, ND6, HND6,CND6,SND6,SCND6

* Non-standard mechanism with 48 inch operating cable must be specified.
(1) Flexible operating cable allows disconnect to be mounted within min and max of "C" dimension when "D" is minimum.
(2) Flexible operating cable allows disconnect to be mounted within min and max of "D" dimension when "C" is nominal

The dimensional information provided in this table is derived from information supplied by the manufacturer of the equipment to be installed. Fit and function of all equipment should be checked before and after installation to assure proper and safe operation and compliance with the applicable regulations, codes and standards.

† Marks are the property of their respective owners.

Notes: Flexible cable allows for variable disconnect mounting and adequate wire bending space must be maintained.
Dimensions are in inches. Millimeters shown are for reference only. Data subject to change without notice.

Free-Standing Enclosures

Disconnect Ordering Information

Square D® †

9422 Disconnect Mechanism

Square D† Mechanism for Switches	Amp	Fuse Clip Rating		Fuse Class	Enclosure Height												C		D	
					72				84				90							
					A		B		A		B		A		B					
		Amp	Volt		in.	mm	in.	mm	in.	mm	in.	mm	in.	mm	in.	mm	in.	mm	in.	mm
RC-1	30A	(non)	(non)	—	11.87	301	11.75	298	17.37	441	17.18	436	20.37	517	20.18	513	3.25	83	7.25	184
RC-2	30A	30A	250V	H,K,R	11.87	301	11.75	298	17.37	441	17.18	436	20.37	517	20.18	513	5.00	127	7.25	184
RC-3	30A	30A	600V	H,K,R	11.87	301	11.75	298	17.37	441	17.18	436	20.37	517	20.18	513	8.00	203	7.25	184
RC-3	30A	30A	600V	J	11.87	301	11.75	298	17.37	441	17.18	436	20.37	517	20.18	513	5.00	127	7.25	184
RC-3	30A	60A	250V	H,K,R	11.87	301	11.75	298	17.37	441	17.18	436	20.37	517	20.18	513	6.00	152	7.25	184
TC-1	30A	(non)	(non)	—	11.87	301	9.87	251	17.37	441	15.37	390	20.37	517	18.37	467	5.75	146	6.25	159
TC-2	30A	30A	250V	H,K,R	11.87	301	9.87	251	17.37	441	15.37	390	20.37	517	18.37	467	5.75	146	6.25	159
TC-3	30A	30A	600V	H,K,R	11.87	301	9.87	251	17.37	441	15.37	390	20.37	517	18.37	467	7.75	197	6.25	159
TC-3	30A	30A	600V	J	11.87	301	9.87	251	17.37	441	15.37	390	20.37	517	18.37	467	5.75	146	6.25	159
TC-3	30A	60A	250V	H,K,R	11.87	301	9.87	251	17.37	441	15.37	390	20.37	517	18.37	467	6.00	152	6.25	159
TD-1	60A	(non)	(non)	—	11.87	301	10.75	273	17.37	441	16.25	413	20.37	517	19.25	489	6.50	165	6.75	171
TD-2	60A	30A	600V	H,K,R	11.87	301	10.75	273	17.37	441	16.25	413	20.37	517	19.25	489	8.50	216	6.75	171
TD-2	60A	60A	250V	H,K,R	11.87	301	10.75	273	17.37	441	16.25	413	20.37	517	19.25	489	6.50	165	6.75	171
TD-3	60A	60A	600V	H,K,R	11.87	301	10.75	273	17.37	441	16.25	413	20.37	517	19.25	489	9.00	229	6.75	171
TD-3	60A	60A	600V	J	11.87	301	10.75	273	17.37	441	16.25	413	20.37	517	19.25	489	6.50	165	6.75	171
TE-1	100A	(non)	(non)	—	11.87	301	10.50	273	17.37	441	16.00	406	20.37	517	19.00	483	4.75	121	8.50	216
TE-2	100A	100A	250V	H,K,R	11.87	301	10.50	273	17.37	441	16.00	406	20.37	517	19.00	483	7.50	191	8.50	216
TE-2	100A	100A	600V	H,K,R	11.87	301	10.50	273	17.37	441	16.00	406	20.37	517	19.00	483	9.50	241	8.50	216
TE-2	100A	100A	600V	J	11.87	301	10.50	273	17.37	441	16.00	406	20.37	517	19.00	483	6.25	159	8.50	216
TE-3	100A	200A	600V	J	11.87	301	10.50	273	17.37	441	16.00	406	20.37	517	19.00	483	13.75	349	8.50	216
TF-1	200A	(non)	(non)	—	11.87	301	9.12	232	17.37	441	14.62	371	20.37	517	17.62	448	5.50	140	11.75	298
TF-2	200A	200A	250V	H,K,R	11.87	301	9.12	232	17.37	441	14.62	371	20.37	517	17.62	448	11.50	292	11.75	298
TF-2	200A	200A	600V	H,K,R	11.87	301	9.12	232	17.37	441	14.62	371	20.37	517	17.62	448	14.00	356	11.75	298
TF-2	200A	200A	600V	J	11.87	301	9.12	232	17.37	441	14.62	371	20.37	517	17.62	448	10.25	260	11.75	28
TF-3	200A	400A	600V	J	11.87	301	9.12	232	17.37	441	14.62	371	20.37	517	17.62	448	14.50	368	11.75	298

Square D† Mechanism for Circuit Breakers	Amp	Circuit Breaker Type	Enclosure Height												C		D	
			72				84				90							
			A		B		A		B		A		B					
			in.	mm	in.	mm	in.	mm	in.	mm	in.	mm	in.	mm	in.	mm	in.	mm
RN-1	100A	FAL,FHL,FCL	7.87	200	6.87	174	17.37	441	16.37	416	20.37	517	19.37	492	5.25	133	5.50	140
RP-1	250A	KAL,KHL,KCL	7.87	200	6.62	168	17.37	441	17.12	435	20.37	517	20.12	511	7.25	184	5.75	146
RR-1	400A	LAL,LHL,Q4L	*	*	*	*	17.37	441	12.75	324	20.37	517	15.75	400	7.75	197	9.00	229
RR-2	400A	ILL	*	*	*	*	17.37	441	17.12	435	20.37	517	20.12	511	11.00	279	15.75	400
RT-1	800A	MEL	*	*	*	*	17.37	441	12.62	321	20.37	517	15.62	397	9.25	235	12.00	305
RT-1	1000A	MAL,MHL	*	*	*	*	17.37	441	12.62	321	20.37	517	16.62	422	9.25	235	12.00	305

* Do not install disconnects in this height enclosure.

The dimensional information provided in this table is derived from information supplied by the manufacturer of the equipment to be installed. Fit and function of all equipment should be checked before and after installation to assure proper and safe operation and compliance with the applicable regulations, codes and standards.

† Marks are the property of their respective owners.

Notes: Dimensions are in inches. Millimeters shown are for reference only. Data subject to change without notice.

Free-Standing Enclosures
Disconnect Ordering Information

ALLEN-BRADLEY †
Standard enclosures designed to accept variable depth type 1494V / 1494U.

Allen-Bradley† 1494V / 1494U disconnect switch:

1. Disconnect switch.
2. Operating mechanism.
3. Operating handle.
4. Fuse block kit, (if required).
5. Fuse clip kit, (if required).
6. Line and Load connectors, (if necessary).
7. Connecting rod.

Allen-Bradley† 1494V 1494U circuit breaker:

1. Circuit breaker.
2. Operating mechanism.
3. Operating handle.
4. Line and load connectors, (if necessary).
5. Connecting rod.

NOTE: Standard enclosures designed to accept fixed depth type 1494F or 1494D.

Allen-Bradley† 1494F disconnect switch:

1. Disconnect switch.
2. Operating mechanism.
3. Operating handle.
4. Fuse block kit, (if required).
5. Fuse clip kit, (if required).
6. Line and load connectors, (if necessary).

Allen-Bradley† 1494D circuit breaker:

1. Circuit breaker.
2. Operating mechanism.
3. Operating handle.
4. Line and load connectors, (if necessary).
5. Slide mechanism

CUTLER-HAMMER †
Standard enclosures designed to accept variable depth type C361 or C371.

Cutler-Hammer† C361 disconnect switch:

1. Disconnect switch.
2. Operating mechanism.
3. Operating handle.
4. Fuse clip kit, (if required).
5. Line and load connectors, (if necessary) .

NOTE: Items 1, 2 and 3 can be ordered as an assembly.

Cutler-Hammer† C371 circuit breaker:

1. Circuit breaker.
2. Operating mechanism.
3. Operating handle.
4. Line and load connectors, (if necessary).

NOTE: Items 2 and 3 can be ordered as an assembly.

GENERAL ELECTRIC †
Standard enclosures designed to accept variable depth type TDA.

General Electric† TDA disconnect switch:

1. Disconnect switch, (QMR, QMW).
2. Operating mechanism.
3. Operating handle TDA1.
4. Fuse clip kit or no-fuse kit, (if required).
5. Line and load connectors, (if necessary).
6. Extended length drive rod, (if required).

NOTE: These items can be ordered as an assembly.

General Electric† TDA circuit breaker:

1. Circuit breaker.
2. Operating mechanism.
3. Operating handle TDA1.
4. Line and load connectors, (if necessary).
5. Extended length drive rods, (if required).

I-T-E SIEMENS †
Standard enclosures designed to accept Max-Flex† type FHO.

I-T-E† Max-Flex† circuit breaker:

1. Circuit breaker.
2. Operating mechanism.
3. Operating handle.
4. Line and load connectors, (if necessary).
5. Operating cable.

NOTE: Items 2, 3 and 5 can be ordered as an assembly, standard with a 36 inch long operating cable. All 24 inch deep enclosures require a 48 inch long cable.

† Marks are the property of their respective owners.

Notes: Data subject to change without notice.

Free-Standing Enclosures
Disconnect Ordering Information

SQUARE D†
Standard enclosures designed to accept variable depth type 9422.

Square D† 9422 disconnect switch:

1. Disconnect switch.
2. Operating mechanism.
3. Operating handle.
4. Fuse clip kit, (if required).
5. Line and load connectors, (if necessary).
6. Connecting rod.

Square D† 9422 circuit breaker:

1. Circuit Breaker.
2. Operating mechanism.
3. Operating handle.
4. Line and load connectors, (if necessary).
5. Connecting rod.

Important Note

When ordering flange-mounted disconnect equipment be sure to include all necessary components.

1. Enclosure includes the following equipment:
   - Enclosure door locking handle and rods
   - Door interlocking system
   - Interlocking connecting rod
   - Adjustable bracket, (see note 3)
2. Operator adapter plate, gasket and hardware for the type of disconnect device being used MUST be ordered separately (see page 452)
3. 24 inch deep enclosures include an adjustable bracket for mounting some disconnects:

   Cutler-Hammer† C361 device

   Cutler-Hammer† C371 E and F devices unless long connecting rod C371CS1 is specified

   Cutlet-Hammer† C371 G and K devices unless long connecting rod C371CS2 is specified

   General Electric† TDA device unless extended length rod TDSR is specified.

   Square D† 9422 device unless extra long connecting rod 9422-R2 is specified.
4. Disconnects and related components are available from the manufacturer.
5. The disconnect ordering information provided is derived from information supplied be the manufacturer of the equipment to be installed. Fit and function of all equipment should be checked before and after installation to assure proper and safe operation and compliance with the applicable regulations, codes and standards.

† Marks are the property of their respective owners.

Notes: Data subject to change without notice.

Pushbutton Enclosures Type 12 and Type 4X - 22.5 mm & 30.5 mm 342-343
Pushbutton Enclosures Type 12 and Type 4X Extra-Deep - 30.5 mm 344-345
Pushbutton Enclosures Type 12 Miniature - 22.5 mm 346-347
Pushbutton Enclosures Type 12 Hinge Cover - 30.5 mm with Panel 348-349
Pushbutton Enclosures Type 12 Angle Front - 30.5 mm 350-351
Pushbutton Enclosures Hole & Cutout Information 352
Consolet Type 12 353-355
Console Type 12 - AW-9 356-357
Console Type 12 - AW-12 358-360
Console Type 12 - AW-14 361-365
Console Accessories Type 12 - AW-14 366-367
Console Accessories 368-369

Pushbutton Enclosures
Type 12 & Type 4X - 22.5 mm & 30.5 mm
Data and Illustration Sheet

PBxx Series

PVxSS Series

Application
- Designed to mount standard 30.5 mm or miniature 22.5 mm oil-tight pushbuttons, pilot lights and switches
- Protects against circulating dust, falling dirt and dripping non-corrosive liquids

Standards
- UL 508A listed, Type 12, Type 13, and Type 4X
- CSA C22.2 No.94 certified, Type 12, Type 13, and Type 4X
- Conforms to NEMA standard for Type 12, Type 13, and Type 4X

Finish
- Wash and phosphate undercoat
- ANSI 61 gray polyester powder finish
- Stainless steel enclosure cover and sides of body have a smooth brushed finish

Accessories
- Hole seals
- Columns and bases
- Touch-up paint
- See accessories section

Construction
- Enclosure and cover are fabricated from (14) or (16) gauge steel, Type 304 or Type 316L stainless steel
- All continuous welded seams are finished smooth
- Cover is attached with captive screws which thread into sealed well nuts (stainless enclosures use stainless sealed well nuts)
- Cover has concealed, detachable hinges which allow for quick removal and can be hinged on either side (not offered on all sizes)
- Cover has a fixed, oil-resistant gasket
- Weldnut in body of enclosure for grounding
- Cover is pre-punched with standard 30.5 mm or miniature 22.5 mm "4-way" pushbutton holes
- External mounting feet are provided for secure wall mounting

Discount Schedule: C2

Subclass: DP0

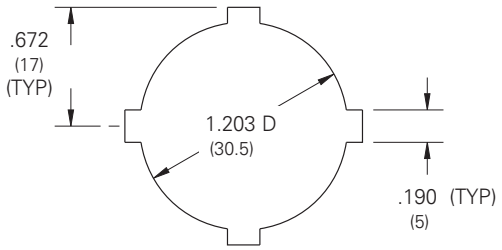

Standard 4-Way

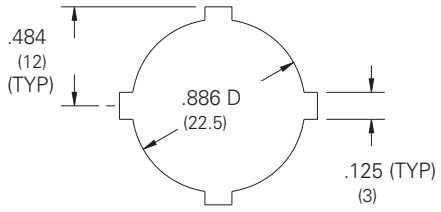

Miniature 4-Way

Notes: We can provide special sizes, finishes and other holes and cutouts, see page 352. Consult the factory for your special requirements.

Pushbutton Enclosures
Type 12 & Type 4X - 22.5 mm & 30.5 mm
Illustration Sheet and Catalog Number

Enclosure Catalog Number (30.5 mm Hole) Steel	Type 304 Stainless	Type 316L Stainless	(22.5 mm Hole) Steel	Type 304 Stainless	Holes	Enclosure Size Height x Width x Depth A x B x C in.	mm	D in.	mm	E in.	mm
PB1*†	PB1-4XS*†	PB1-4XSS6*†	PB1M*†	PB1M-4XS*†	1	4.00 x 3.25 x 3.00	102 x 83 x 76	2.12	54	1.75	44
PB2*†	PB2-4XS*†	PB2-4XSS6*†	PB2M*†	PB2M-4XS*†	2	5.75 x 3.25 x 3.00	146 x 83 x 76	2.12	54	1.75	44
PB3	-	-	-	-	3	7.25 x 6.25 x 3.00	184 x 159 x 76	2.62	67	2.12	54
PB4	-	-	-	-	4	7.25 x 6.25 x 3.00	184 x 159 x 76	2.62	67	2.12	54
PB6	PB6-4XS*	PB6-4XSS6*	-	-	6	9.50 x 6.25 x 3.00	241 x 159 x 76	2.62	67	2.12	54
PB9	PB9-4XS*	PB9-4XSS6*	-	-	9	9.50 x 8.50 x 3.00	241 x 216 x 76	2.62	67	2.12	54
PB12	PB12-4XS*	PB12-4XSS6*	-	-	12	11.75 x 8.50 x 3.00	298 x 216 x 76	2.62	67	2.12	54
PB16	-	-	-	-	16	11.75 x 10.75 x 3.00	298 x 273 x 76	2.62	67	2.12	54
PB20	-	-	-	-	20	14.00 x 10.75 x 3.00	356 x 273 x 76	2.62	67	2.12	54
PB25	-	-	-	-	25	14.00 x 13.00 x 3.00	356 x 330 x 76	2.62	67	2.12	54
PV3*	PV3-4XS*	PV3-4XSS6*	PV3M*	PV3M-4XS*	3	8.00 x 3.25 x 2.75	203 x 83 x 70	2.12	54	1.75	44
PV4*	PV4-4XS*	PV4-4XSS6*	PV4M*	PV4M-4XS*	4	10.25 x 3.25 x 2.75	260 x 83 x 70	1.87	47	1.75	44
PV5*	-	-	-	-	5	12.50 x 3.25 x 2.75	318 x 83 x 70	1.87	47	1.75	44
PV6*	-	-	-	-	6	14.75 x 3.25 x 2.75	375 x 83 x 70	1.87	47	1.75	44
PV8*	-	-	-	-	8	20.25 x 3.25 x 2.75	514 x 83 x 70	1.87	47	1.75	44
PV10*	-	-	-	-	10	24.75 x 3.25 x 2.75	629 x 83 x 70	1.87	47	1.75	44

* Enclosures are not hinged.
† PB1 and PB2 enclosures are fabricated from (16) gauge steel or stainless steel

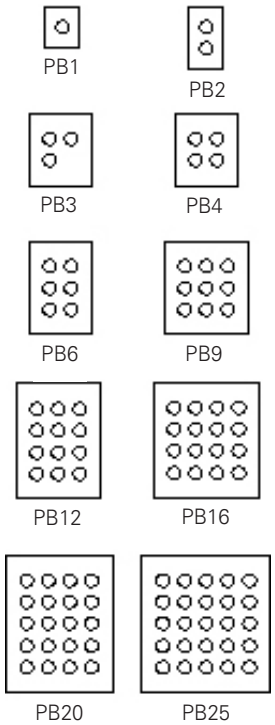

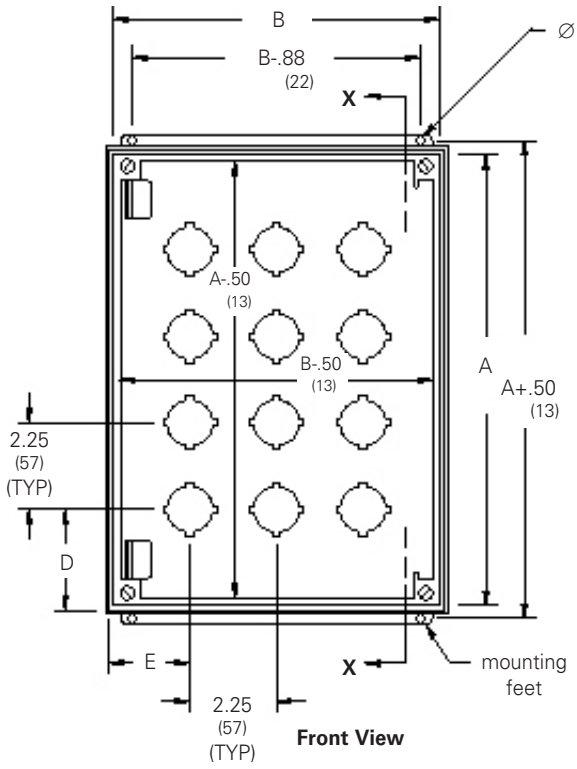

Front View

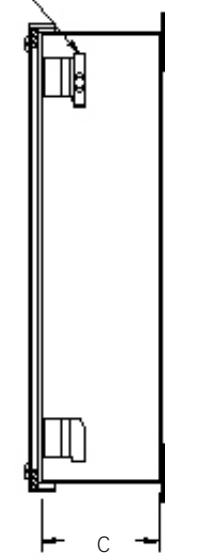

Section X-X

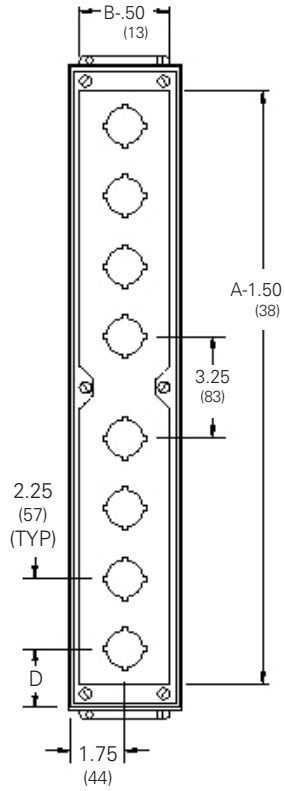

PV Series
Typical 8 & 10
Hole

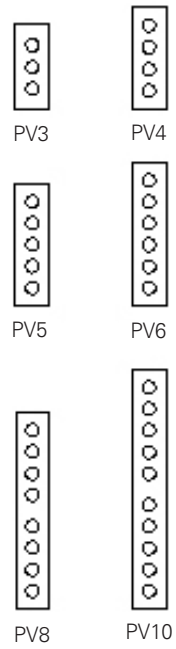

Cover Hole
Layout

Notes: Dimensions are in inches. Millimeters shown are for reference only. Data subject to change without notice.

Pushbutton Enclosures
Type 12 & Type 4X Extra-Deep - 30.5 mm
Data and Illustration Sheet

Application
- Designed to mount standard 30.5 mm oil-tight pushbuttons, pilot lights and switches
- Protects against circulating dust, falling dirt and dripping non-corrosive liquids

Standards
- UL 508A listed, Type 12, Type 13, and Type 4X
- CSA C22.2 No.94 certified, Type 12, Type 13, and Type 4X
- Conforms to NEMA standard for Type 12, Type 13, and Type 4X

Finish
- Wash and phosphate undercoat
- ANSI 61 gray polyester powder finish
- Stainless steel enclosure cover and sides of body have a smooth brushed finish

Accessories
- Hole seals
- Columns and bases
- Touch-up paint
- See accessories section

Construction
- Enclosure and cover are fabricated from (14) or (16) gauge steel or Type 304 stainless steel
- Enclosure has extra depth for those components that require more room
- All continuous welded seams are finished smooth
- Cover is attached with captive screws which thread into sealed well nuts (stainless enclosures use stainless sealed well nuts)
- Cover has concealed, detachable hinges which allow for quick removal and can be hinged on either side (PBX Series only)
- Cover has a fixed, oil-resistant gasket
- Weldnut in body of enclosure for grounding
- Cover is prepunched with standard 30.5 mm "4-way" pushbutton holes
- External mounting feet are provided for secure wall mounting

Discount Schedule: C2

Subclass: DP0

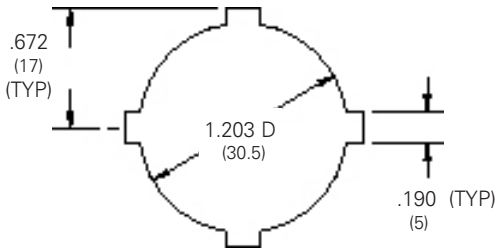

Standard 4-Way

Notes: We can provide special sizes, finishes and other holes and cutouts, see page 352. Consult the factory for your special requirements.

Pushbutton Enclosures
Type 12 & Type 4X Extra-Deep - 30.5 mm
Illustration Sheet and Catalog Number

Enclosure Catalog Number		Holes	Enclosure Size Height x Width x Depth A x B x C		D		E	
Steel	Type 304 Stainless		in.	mm	in.	mm	in.	mm
PVX1*†	PVX1-4XS *†	1	4.00 x 4.00 x 4.75	102 x 102 x 121	2.12	54	1.75	44
PVX2*†	PVX2-4XS *†	2	6.00 x 4.00 x 4.75	152 x 102 x 121	2.12	54	1.75	44
PVX3*	PVX3-4XS *	3	8.00 x 4.00 x 4.75	203 x 102 x 121	2.12	54	1.75	44
PVX4*	PVX4-4XS *	4	10.00 x 4.00 x 4.75	254 x 102 x 121	1.87	47	1.75	44
PBX4	-	4	7.25 x 6.25 x 4.75	184 x 159 x 121	2.62	67	2.12	54
PBX6	-	6	9.50 x 6.25 x 4.75	241 x 159 x 121	2.62	67	2.12	54
PBX9	-	9	9.50 x 8.50x x 4.75	241 x 216 x 121	2.62	67	2.12	54
PBX10	-	10	14.00 x 6.25 x 4.75	356 x 159 x 121	2.62	67	2.12	54
PBX12	-	12	11.75 x 8.50 x 4.75	298 x 216 x 121	2.62	67	2.12	54
PBX16	-	16	11.75 x 10.75 x 4.75	298 x 273 x 121	2.62	67	2.12	54
PBX20	-	20	14.00 x 10.75 x 4.75	356 x 273 x 121	2.62	67	2.12	54
PBX25	-	25	14.00 x 13.00 x 4.75	356 x 330 x 121	2.62	67	2.12	54
PBX30	-	30	16.25 x 13.00 x 4.75	413 x 330 x 121	2.62	67	2.12	54
PBX36	-	36	16.25 x 15.25 x 4.75	413 x 387 x 121	2.62	67	2.12	54

* Enclosures are not hinged.
† PVX1 and PVX2 enclosures are fabricated from (16) gauge steel or stainless steel.

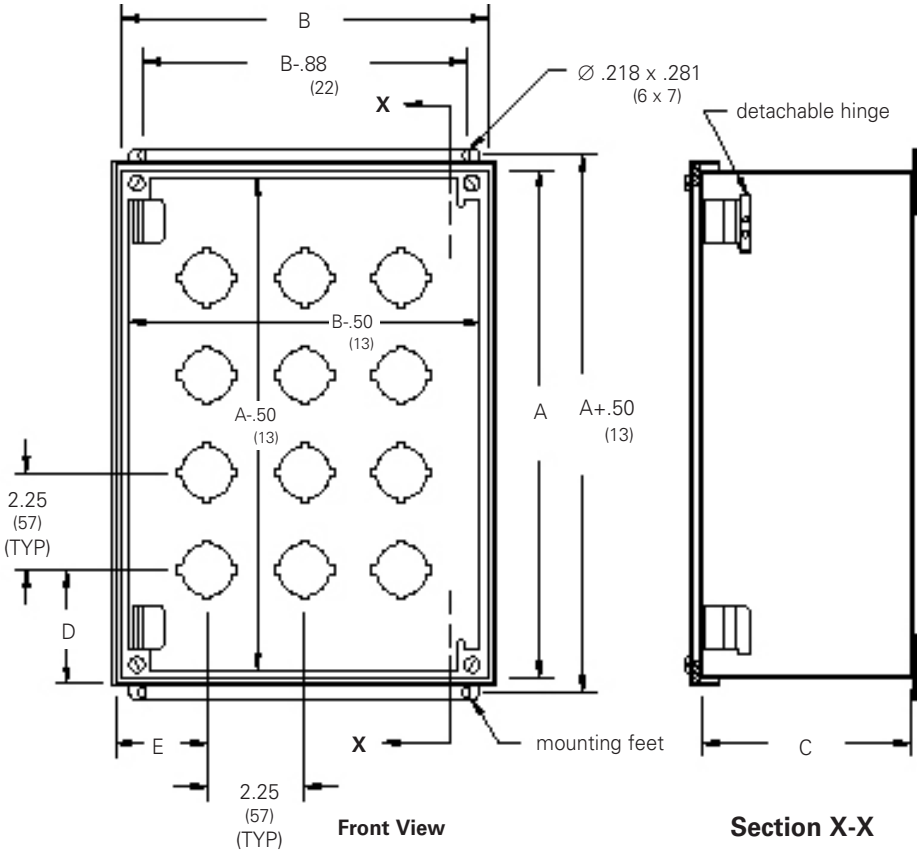

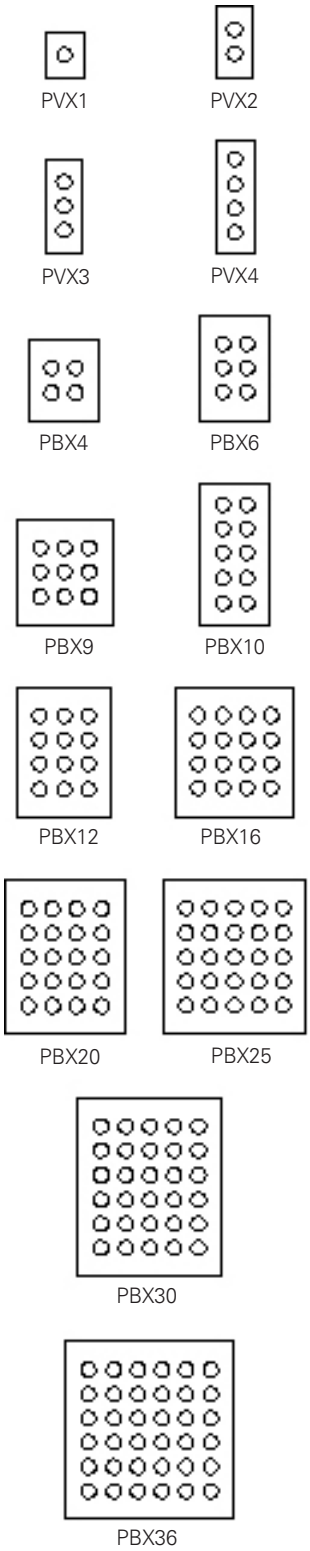

Cover Hole Layout

Notes: Dimensions are in inches. Millimeters shown are for reference only. Data subject to change without notice.

Pushbutton Enclosures
Type 12 Miniature - 22.5 mm
Data and Illustration Sheet

Application
- Designed to mount miniature 22.5 mm oil-tight pushbuttons, pilot lights and switches
- Protects against circulating dust, falling dirt and dripping non-corrosive liquids

Standards
- UL 508A listed, Type 12 and Type 13
- CSA C22.2 No.94 certified, Type 12 and Type 13
- Conforms to NEMA standard for Type 12 and Type 13

Finish
- Wash and phosphate undercoat
- ANSI 61 gray polyester powder finish

Accessories
- Hole seals
- Columns and bases
- Touch-up paint
- See accessories section

Construction
- Enclosure and cover are fabricated from (14) or (16) gauge steel
- All continuous welded seams are finished smooth
- Cover is attached with captive screws which thread into sealed well nuts
- Covers more than 2.75 inches wide have concealed, detachable hinges which allow for quick removal and can be hinged on either side
- Cover has a fixed oil-resistant gasket
- Weldnut in body of enclosure for grounding
- Cover is pre-punched with miniature 22.5 mm "4-way" pushbutton holes
- External mounting feet are provided for secure wall mounting

Discount Schedule: C2

Subclass: DP0

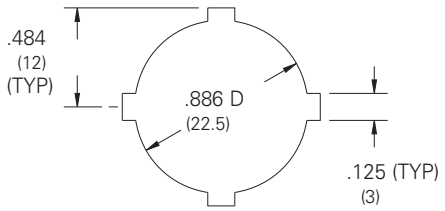

Miniature 4-Way

Notes: We can provide special sizes, finishes and other holes and cutouts, see page 352. Consult the factory for your special requirements.

Pushbutton Enclosures
Type 12 Miniature - 22.5 mm
Illustration Sheet and Catalog Number

Enclosure Catalog Number	Holes	Enclosure Size Height x Width x Depth A x B x C in.	mm	D in.	mm	E in.	mm
PB1B*†	1	3.25 x 2.75 x 3.50	83 x 70 x 89	1.75	44	1.50	38
PB2B*†	2	5.12 x 2.75 x 3.50	130 x 70 x 89	1.75	44	1.50	38
PBS3B*	3	7.00 x 2.75 x 3.50	178 x 70 x 89	1.75	44	1.50	38
PBS4B*	4	8.87 x 2.75 x 3.50	225 x 70 x 89	1.75	44	1.50	38
PB4B	4	6.62 x 5.00 x 3.50	168 x 127 x 89	2.50	64	1.87	47
PB6B	6	8.50 x 5.00 x 4.25	216 x 127 x 108	2.50	64	1.87	47
PB9B	9	8.50 x 6.50 x 4.25	216 x 165 x 108	2.50	64	1.87	47
PB12B	12	10.37 x 6.50 x 4.25	263 x 165 x 108	2.50	64	1.87	47
PB16B	16	10.37 x 8.00 x 4.25	263 x 203 x 108	2.50	64	1.87	47
PB20B	20	12.25 x 8.00 x 4.25	311 x 203 x 108	2.50	64	1.87	47
PB25B	25	12.25 x 9.50 x 4.25	311 x 241 x 108	2.50	64	1.87	47
PB30B	30	14.12 x 9.50 x 4.25	359 x 241 x 108	2.50	64	1.87	47

* Enclosures are not hinged.
† PB1B and PB2B enclosures are fabricated from (16) gauge steel

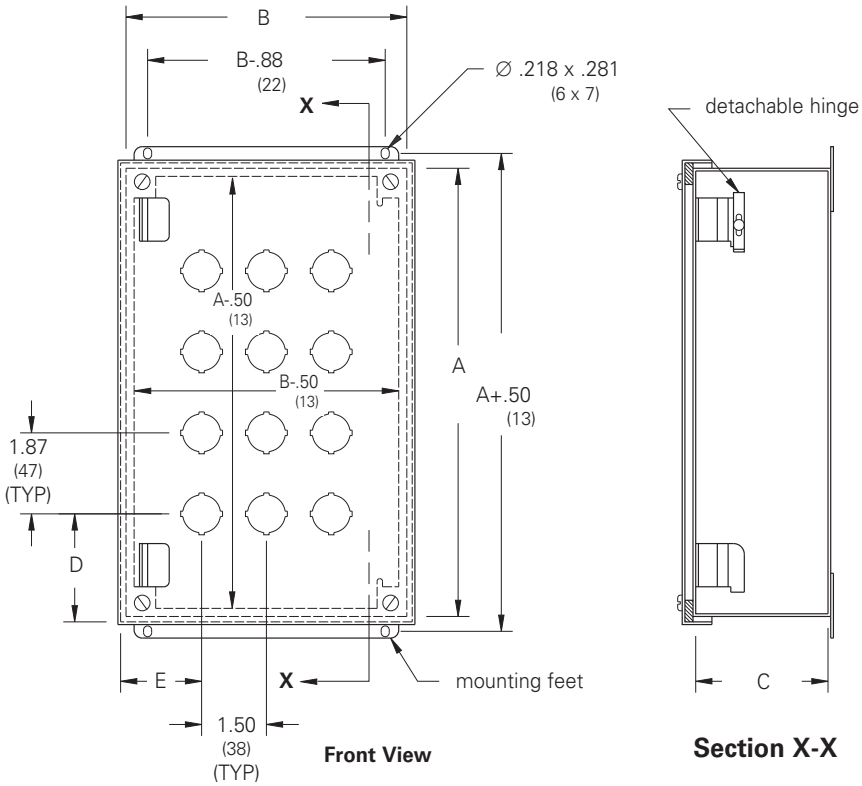

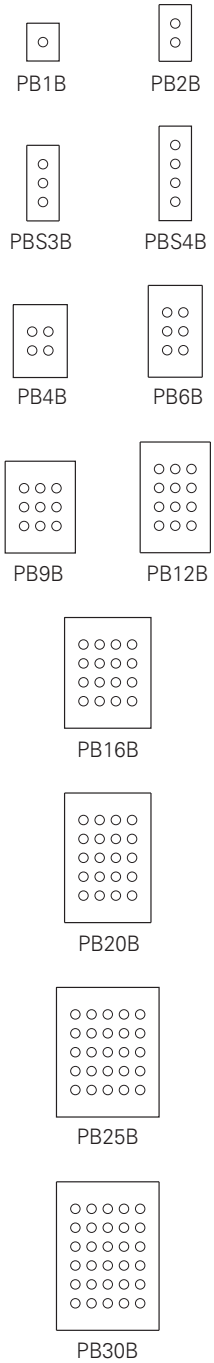

Cover Hole Layout

Notes: Dimensions are in inches. Millimeters shown are for reference only. Data subject to change without notice.

Pushbutton Enclosures
Type 12 Hinge Cover - 30.5 mm With Panel
Data and Illustration Sheet

Application
- Designed to mount standard 30.5 mm oil-tight pushbuttons, pilot lights and switches
- Protects against circulating dust, falling dirt and dripping non-corrosive liquid

Standards
- UL 508A listed, Type 12 and Type 13
- CSA C22.2 No.94 certified, Type 12 and Type 13
- Conforms to NEMA standard for Type 12 and Type 13

Finish
- Wash and phosphate undercoat
- ANSI 61 gray polyester powder finish
- Panels have white enamel finish

Accessories
- Hole seals
- Columns and bases
- Touch-up paint
- See accessories section

Construction
- Enclosure and cover are fabricated from (14) gauge steel
- All continuous welded seams are finished smooth
- Cover is secured to the body with a continuous hinge on one side and captive screws which thread into sealed well nuts on the opposite side
- Cover has a fixed oil-resistant gasket
- Weldnut in body of enclosure for grounding
- Cover is pre-punched with standard 30.5 mm "4-way" pushbutton holes
- Heavy gauge panel mounted to weldnuts is provided with enclosure
- External mounting feet are provided for secure wall mounting

Discount Schedule: C2

Subclass: DP0

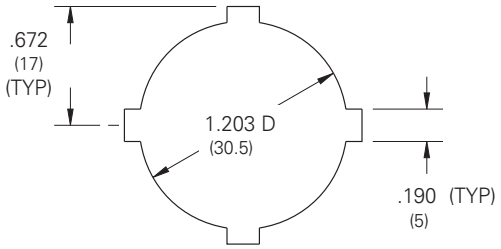

Standard 4-Way

Notes: We can provide special sizes, finishes and other holes and cutouts, see page 352. Consult the factory for your special requirements.

Pushbutton Enclosures
Type 12 Hinge Cover - 30.5 mm With Panel
Illustration Sheet and Catalog Number

Enclosure Catalog Number	Holes	Enclosure Size Height x Width x Depth A x B x C		Panel Size Height x Width			
		in.	mm	in.	mm	in.	mm
PBP4	4	8.50 x 7.50 x 6.00	216 x 191 x 152	6.50	35	5.50	140
PBP6	6	11.00 x 7.50 x 6.00	279 x 191 x 152	9.00	229	5.50	140
PBP9	9	11.00 x 10.00 x 6.00	279 x 254 x 152	9.00	229	8.00	203
PBP12	12	13.50 x 10.00 x 6.00	343 x 254 x 152	11.50	292	8.00	203
PBP16	16	13.50 x 12.50 x 6.00	343 x 318 x 152	11.50	292	10.50	267
PBP20	20	16.00 x 12.50 x 6.00	406 x 318 x 152	14.00	356	10.50	267
PBP25	25	16.00 x 15.00 x 6.00	406 x 381 x 152	14.00	356	13.00	330
PBP30	30	18.50 x 15.00 x 6.00	470 x 381 x 152	16.50	419	13.00	330
PBP36	36	18.50 x 17.50 x 6.00	470 x 445 x 152	16.50	419	15.50	394
PBP42	42	21.00 x 17.50 x 6.00	533 x 445 x 152	19.00	483	15.50	394

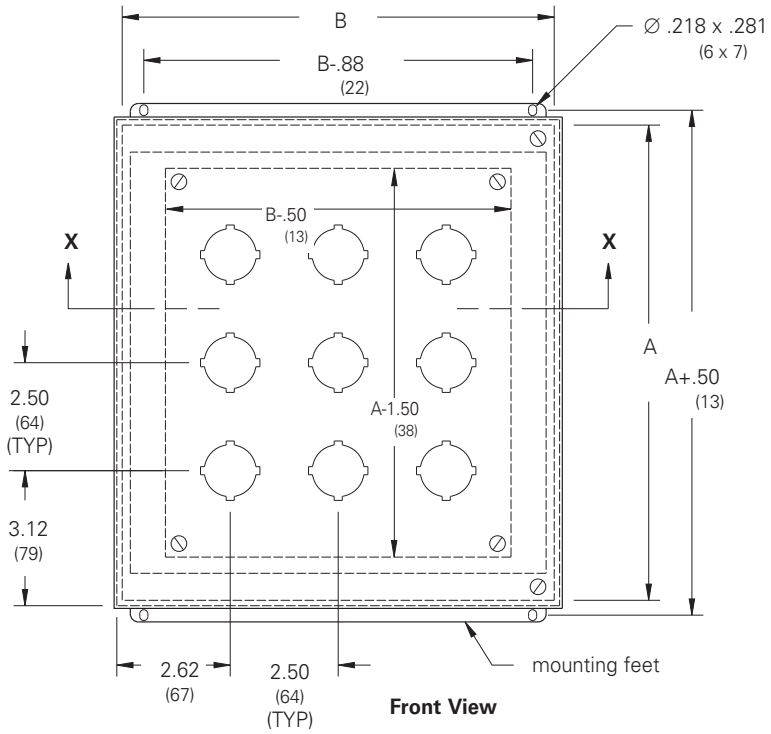

Front View

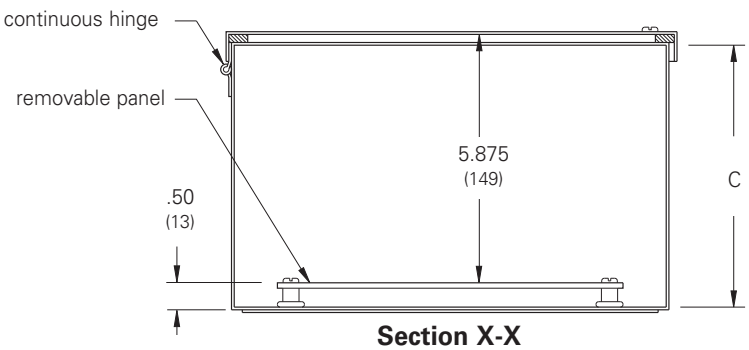

Section X-X

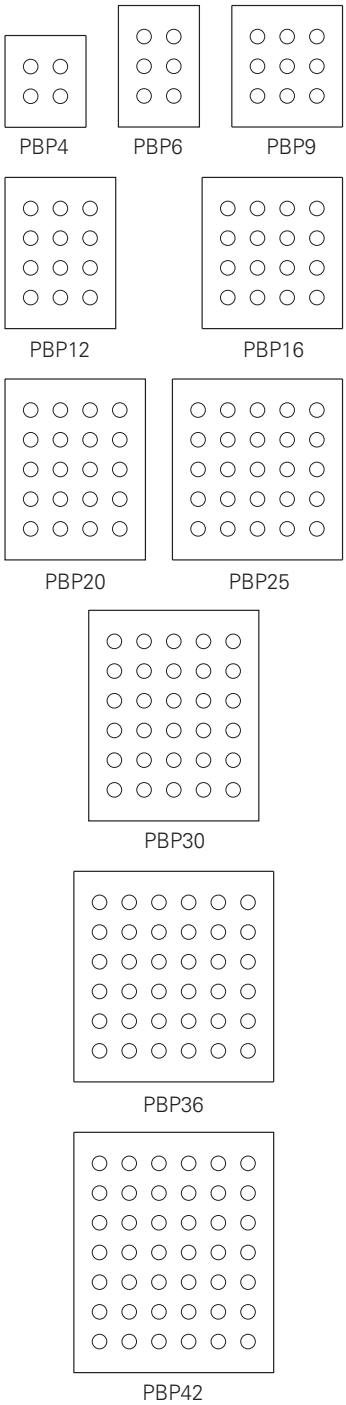

Cover Hole Layout

Notes: Dimensions are in inches. Millimeters shown are for reference only. Data subject to change without notice.

Pushbutton Enclosures
Type 12 Angle Front - 30.5 mm
Data and Illustration Sheet

Application
- Designed to mount standard 30.5 mm oil-tight pushbuttons, pilot lights and switches
- Designed with angle front for mounting in either 30° or 60° positions
- Protects against circulating dust, falling dirt and dripping non-corrosive liquid

Standards
- UL 508A listed, Type 12 and Type 13
- CSA C22.2 No.94 certified, Type 12 and Type 13
- Conforms to NEMA standard for Type 12 and Type 13

Finish
- Wash and phosphate undercoat
- ANSI 61 gray polyester powder finish

Accessories
- Hole seals
- Columns and bases
- Touch-up paint
- See accessories section

Construction
- Enclosure and cover are fabricated from (14) or (16) gauge steel
- All continuous welded seams are finished smooth
- Cover is attached with captive screws which thread into sealed well nuts
- Covers more than 3.25 inches high have concealed, detachable hinges which allow for quick removal and can be hinged on either side
- Cover has a fixed oil-resistant gasket
- Weld nut in body of enclosure for grounding
- Cover is pre-punched with standard 30.5 mm "4-way" pushbutton holes
- External mounting feet are provided for secure wall mounting

Discount Schedule: C2

Subclass: DP0

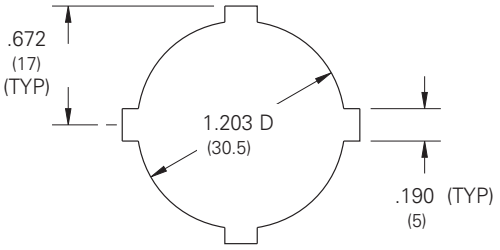

Standard 4-Way

Notes: We can provide special sizes, finishes and other holes and cutouts, see page 352. Consult the factory for your special requirements.

Pushbutton Enclosures
Type 12 Angle Front - 30.5 mm
Illustration Sheet and Catalog Number

Enclosure Catalog Number	Holes	Enclosure Size Height x Width x Depth A x B x C		D		E		F	
		in.	mm	in.	mm	in.	mm	in.	mm
PBC2*†	2	3.25 x 6.25 x 4.81	83 x 159 x 122	3.31	84	1.75	44	2.12	54
PBCS3*	3	3.25 x 8.50 x 4.81	83 x 216 x 122	3.31	84	1.75	44	2.12	54
PBC3	3	6.25 x 7.25 x 6.37	159 x 184 x 162	5.90	150	2.12	54	2.62	67
PBCS4*	4	3.25 x 10.25 x 4.81	83 x 260 x 122	3.31	84	1.75	44	1.87	47
PBC4	4	6.25 x 7.25 x 6.37	159 x 184 x 162	5.90	150	2.12	54	2.62	67
PBC6	6	6.25 x 9.50 x 6.37	159 x 241 x 162	5.90	150	2.12	54	2.62	67
PBC8	8	6.25 x 11.75 x 6.37	159 x 298 x 162	5.90	150	2.12	54	2.62	67
PBC9	9	9.50 x 8.50 x 7.88	241 x 216 x 200	8.84	225	2.12	54	2.62	67
PBCS12	12	6.25 x 16.25 x 6.37	159 x 413 x 162	5.90	150	2.12	54	2.62	67
PBC12	12	8.50 x 11.75 x 7.50	216 x 298 x 191	7.84	199	2.12	54	2.62	67
PBC16	16	10.75 x 11.75 x 8.62	273 x 298 x 219	9.78	248	2.12	54	2.62	67
PBC20	20	10.75 x 14.00 x 8.62	273 x 356 x 219	9.78	248	2.12	54	2.62	67
PBC25	25	13.00 x 14.00 x 9.75	330 x 356 x 248	11.75	298	2.12	54	2.62	67

* Enclosures are not hinged.
† PBC2 enclosures are fabricated from (16) gauge steel

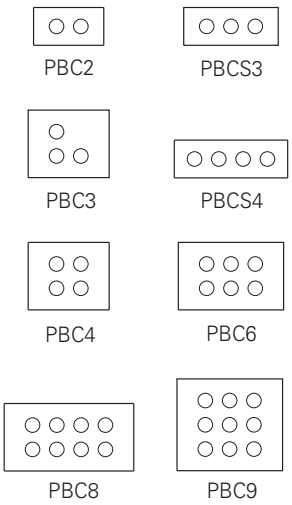

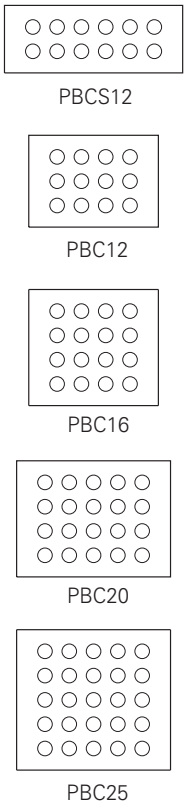

Cover Hole Layout

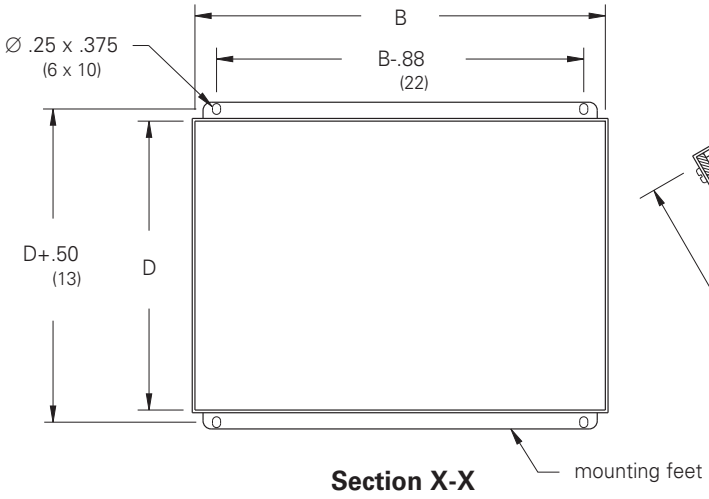

Section X-X

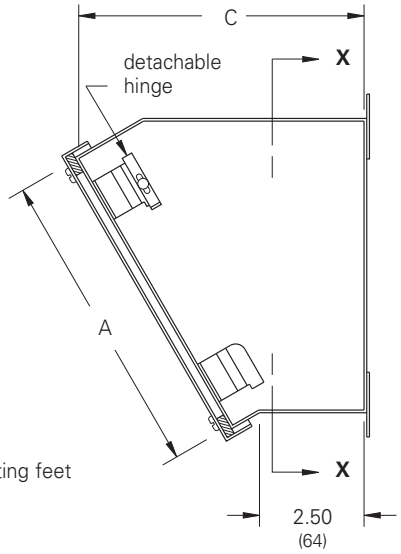

Side Section View

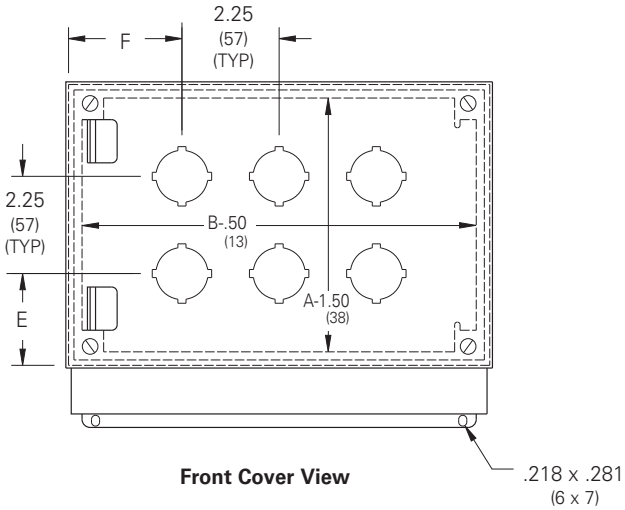

Front Cover View

Notes: Dimensions are in inches. Millimeters shown are for reference only. Data subject to change without notice.

Pushbutton Enclosures Hole and Cutout Information

Illustration Sheet

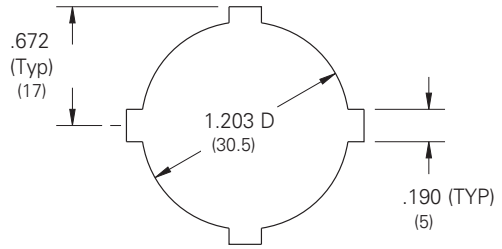

Standard 4-Way (Type S4-WAY)

Our standard 4-way pushbutton hole will accommodate all standard size pushbutton, pilot lights and selector switches. The hole is designed to orient the device and legend plate in one of four different positions. Furnished on "PB", "PBX", "PBP", "PBC", "PBCS", "PV", "PVX", "PVS" and "P" style enclosures.

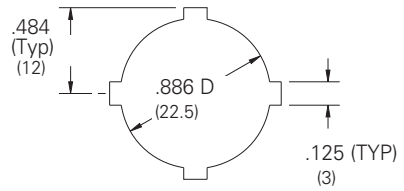

Miniature 4-Way (Type: M4-WAY)

Our miniature 4-way pushbutton hole will accommodate miniature size pushbuttons, pilot lights and selector switches. The hole is designed to orient the device and legend plate in one of four different positions. Furnished on "PB-M" and "PB-B" style enclosures.

Custom Holes and Cutouts

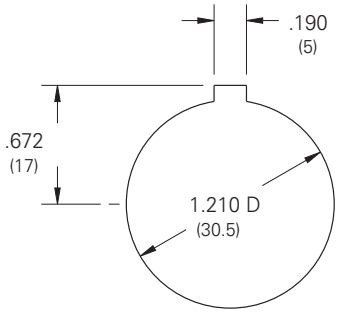

Type: C-101

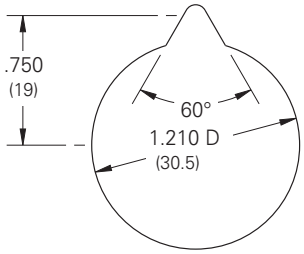

Type C-102

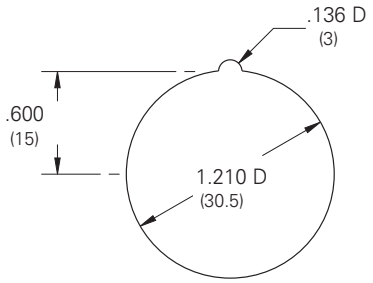

Type: C-103

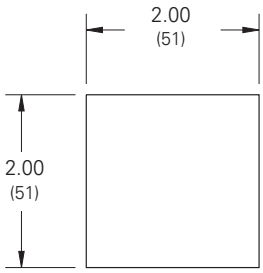

Type C-201

Notes: When specifying hole types "C-101", "C-102" and "C-103" indicate orientation of "key". Dimensions are in inches. Millimeters shown are for reference only. Data subject to change without notice.

Consolet
Type 12
Data Sheet

Application
- Houses electrical controls and instruments
- Designed with angle front for mounting in either 30° or 60° position
- Protects against circulating dust, falling dirt and dripping non-corrosive liquids

Standards
- UL 508A listed, Type 12 and Type 13
- CSA C22.2 No.94 certified, Type 12 and Type 13
- Conforms to NEMA standard for Type 12 and Type 13

Finish
- Wash and phosphate undercoat
- ANSI 61 gray polyester powder finish
- Stainless steel enclosure cover and sides of body have a smooth brushed finish

Accessories
- Columns and bases
- Touch-up paint
- See Accessories section

Construction
- Enclosure and cover are fabricated from (14) gauge steel or Type 304 stainless steel
- All continuous welded seams are finished smooth
- Cover is secured to the body with a continuous hinge on one side and captive screws which thread into sealed well nuts on the opposite side
- Cover has a fixed oil-resistant gasket
- Ground stud provided on cover and body

Discount Schedule: C2
Subclass: DQ0

Notes: Dimensions are in inches. Millimeters shown are for reference only. Data subject to change without notice.

Consolet
Type 12
Illustration Sheet and Catalog Number

Enclosure Catalog Number		Enclosure Size Height x Width x Depth A x B x C		D		E		F		G		H		J	
Steel	Type 304 Stainless	in.	mm	in.	mm	in.	mm	in.	mm	in.	mm	in.	mm	in.	mm
AC-8C8	AC-8C8SS	8.00 x 8.00 x 7.12	203 x 203 x 181	5.62	143	7.50	191	6.62	168	7.37	187	8.25	210	8.25	210
AC-8C12	AC-8C12SS	8.00 x 12.00 x 7.12	203 x 305 x 181	5.62	143	7.50	191	6.62	168	11.37	289	8.25	210	12.25	311
AC-8C16	AC-8C16SS	8.00 x 16.00 x 7.12	203 x 406 x 181	5.62	143	7.50	191	6.62	168	15.37	390	8.25	210	16.25	413
AC-8C20	AC-8C20SS	8.00 x 20.00 x 7.12	203 x 508 x 181	5.62	143	7.50	191	6.62	168	19.37	492	8.25	210	20.25	514
AC-12C12	AC-12C12SS	12.00 x 12.00 x 9.12	305 x 305 x 232	7.62	194	11.00	279	10.62	270	11.37	289	12.25	311	12.25	311
AC-12C16	AC-12C16SS	12.00 x 16.00 x 9.12	305 x 406 x 232	7.62	194	11.00	279	10.62	270	15.37	390	12.25	311	16.25	413
AC-12C20	AC-12C20SS	12.00 x 20.00 x 9.12	305 x 508 x 232	7.62	194	11.00	279	10.62	270	19.37	492	12.25	311	20.25	514
AC-12C24	AC-12C24SS	12.00 x 24.00 x 9.12	305 x 610 x 232	7.62	194	11.00	279	10.62	270	23.37	594	12.25	311	24.25	616
AC-16C16	AC-16C16SS	16.00 x 16.00 x 11.12	406 x 406 x 282	9.62	244	14.50	368	14.62	371	15.37	390	16.25	413	16.25	413
AC-16C20	AC-16C20SS	16.00 x 20.00 x 11.12	406 x 508 x 282	9.62	244	14.50	368	14.62	371	19.37	492	16.25	413	20.25	514
AC-16C24	AC-16C24SS	16.00 x 24.00 x 11.12	406 x 610 x 282	9.62	244	14.50	368	14.62	371	23.37	594	16.25	413	24.25	616
AC-16C30	AC-16C30SS	16.00 x 30.00 x 11.12	406 x 762 x 282	9.62	244	14.50	368	14.62	371	29.37	746	16.25	413	30.25	768
AC-16C36	AC-16C36SS	16.00 x 36.00 x 11.12	406 x 914 x 282	9.62	244	14.50	368	14.62	371	35.37	898	16.25	413	36.25	921
AC-20C20	AC-20C20SS	20.00 x 20.00 x 13.12	508 x 508 x 333	11.62	295	18.00	457	18.62	473	18.62	473	20.25	514	20.25	514
AC-20C24	AC-20C24SS	20.00 x 24.00 x 13.12	508 x 610 x 333	11.62	295	18.00	457	18.62	473	22.62	574	20.25	514	24.25	616
AC-20C30	AC-20C30SS	20.00 x 30.00 x 13.12	508 x 762 x 333	11.62	295	18.00	457	18.62	473	28.62	727	20.25	514	30.25	768

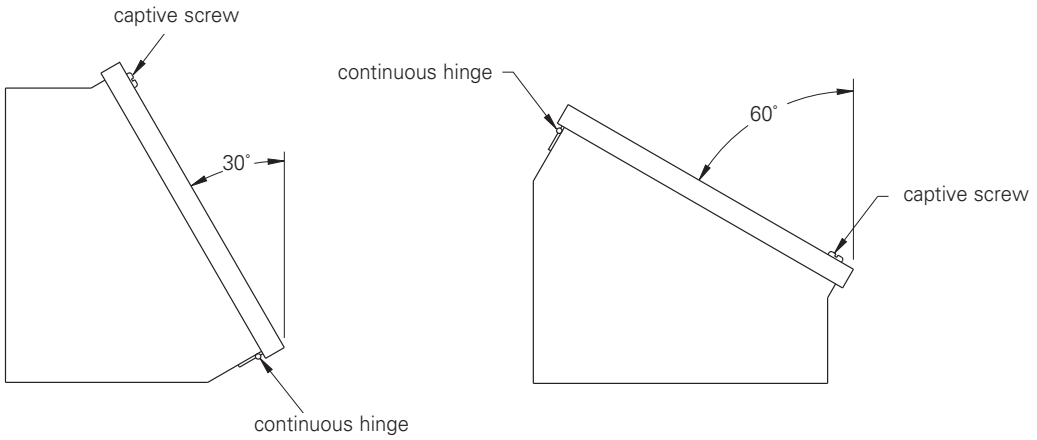

Typical Mounting Configurations
Side Views

Notes: We can provide special sizes, finishes and other holes and cutouts, see page 352. Consult the factory for your special requirements.

Consolet
Type 12
Illustration Sheet

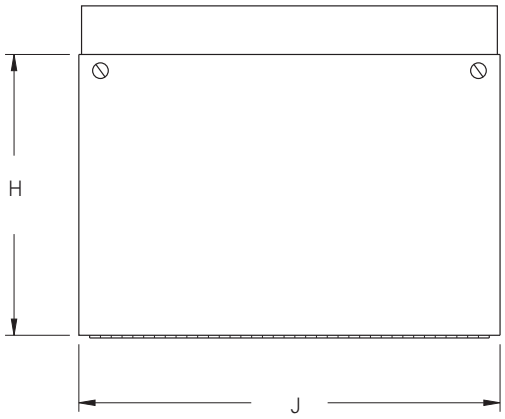

Front Cover View

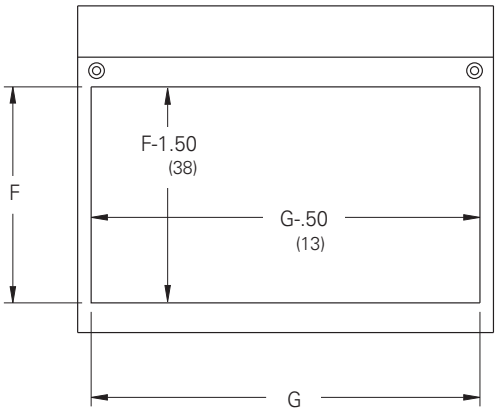

Enclosure Opening View
(cover and hinge removed)

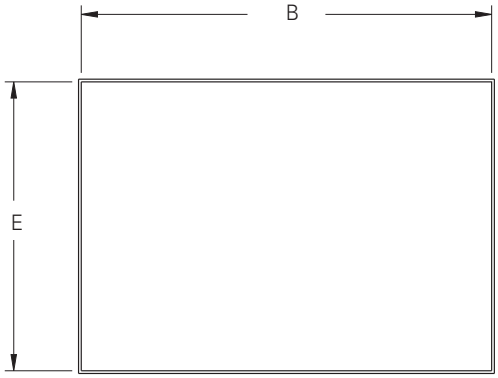

Section X-X

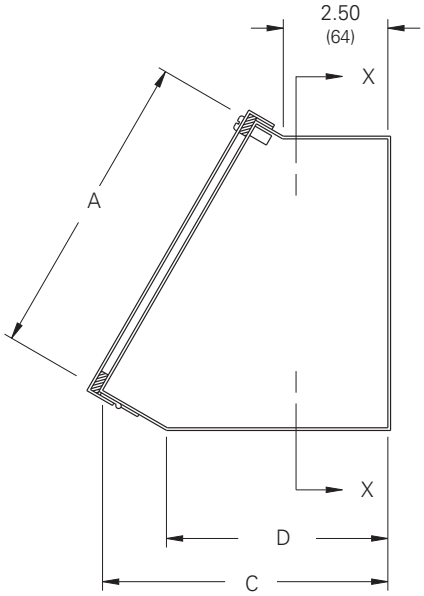

Side Section View

Notes: Dimensions are in inches. Millimeters shown are for reference only. Data subject to change without notice.

Console
Type 12 - AW-9
Data Sheet and Catalog Number

Application
- Houses electrical controls and instruments
- Designed with 45° angle top surface for pushbuttons, pilot lights, switches, or other monitoring devices
- Protects against circulating dust, falling dirt and dripping non-corrosive liquids

Standards
- UL 508A listed, Type 12
- CSA C22.2 No.94 certified, Type 12
- Conforms to NEMA standard for Type 12

Construction
- Console, panel cover and door are fabricated from (14) gauge steel
- All continuous welded seams are finished smooth
- Panel cover is secured to the body with a continuous hinge along the front side and captive screws which thread into sealed well nuts on the other three sides
- Cover stops allow the panel cover to be held in the open position
- Front access door is secured to the body with a heavy-duty continuous hinge on one side and a 3-point locking handle which latches to the opposite side
- Print pocket provided
- Panel cover and front door have a fixed oil-resistant gasket
- .375-16 collar studs are provided on back and both side walls for mounting optional panel

Finish
- Wash and phosphate undercoat
- ANSI 61 gray polyester powder finish

Accessories
- Panels
- NEMA treminal strap kit
- Terminal blocks
- Caster kit
- Touch-up paint
- Replacement handle, 25228C, see page 426
- See Accessories section

Discount Schedule: C2
Subclass: DR0

Consoles	Console Size Height x Width x Depth A x B x C		D		Back Panel	Panel Size Height x Width A x B		Side Panel	Panel Size Height x Width A x B	
Catalog Number	in.	mm	in.	mm	Catalog Number	in.	mm	Catalog Number	in.	mm
AC-924B	48.00 x 24.00 x 18.00	1219 x 610 x 457	15.25	387	AW3020P	26.87 x 16.87	682 x 428	AW3020P	26.87 x 16.87	682 x 428
AC-936B	48.00 x 36.00 x 18.00	1219 x 914 x 457	25.25	641	AW3030P	26.87 x 26.87	682 x 682	AW3020P	26.87 x 16.87	682 x 428

Notes: We can provide special sizes, finishes and other modifications. Consult the factory for your special requirements.

Console
Type 12 - AW-9
Illustration Sheet

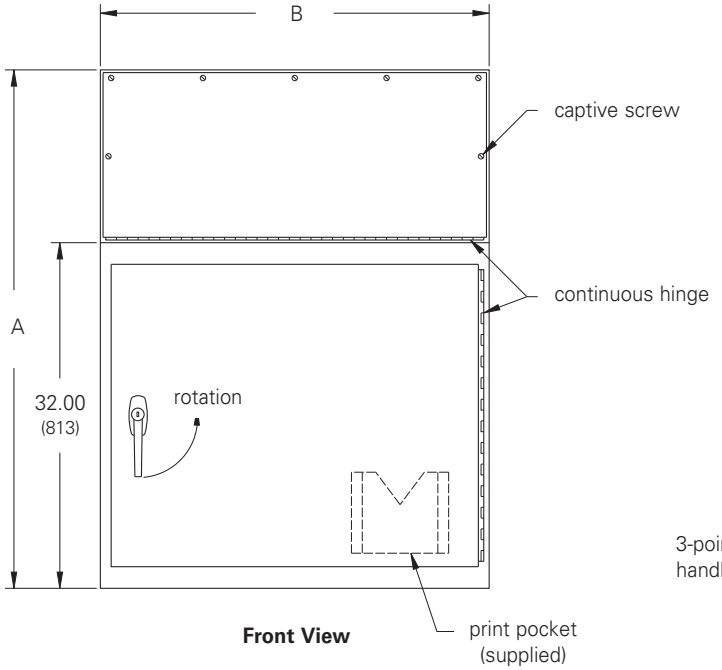

Front View

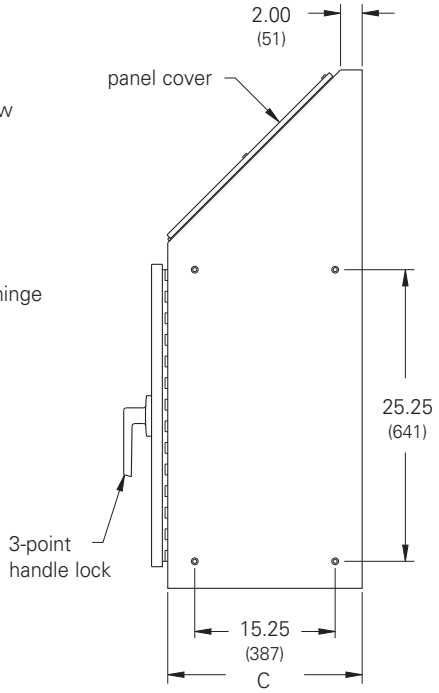

Side View

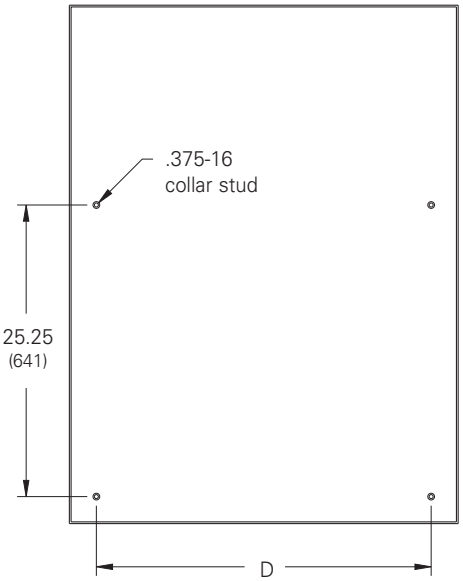

Front Section View

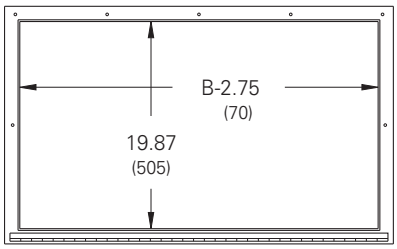

Panel Cover Opening
(Panel Cover Removed)

Notes: Dimensions are in inches. Millimeters shown are for reference only. Data subject to change without notice.

Console
Type 12 - AW-12
Data Sheet and Catalog Number

Application
- Houses electrical controls and instruments
- Designed with an angled top and front surface for pushbuttons, pilot lights, switches or other monitoring devices
- Protects against circulating dust, falling dirt and dripping non-corrosive liquids

Standards
- UL 508A listed, Type 12
- CSA C22.2 No.94 certified, Type 12
- Conforms to NEMA standard for Type 12

Finish
- Wash and phosphate undercoat
- ANSI 61 gray polyester powder finish
- Optional top assembly and writing desk have an ANSI 61 gray polyester powder finish
- Panels have a white enamel finish

Accessories
- Terminal blocks
- Caster kit
- Touch-up paint
- See Accessories section
- Replacement handle, 25228C, see page 426

Construction
- Console body, panel cover and door, top assembly and writing desk are fabricated from (14) gauge steel
- All continuous welded seams are finished smooth
- Panel cover is secured to the body with a continuous hinge along the front side and captive screws which thread into sealed well nuts on the other three sides
- Cover stops allow the panel cover to be held in the open position
- Consoles 36 inches wide or less have a single front access door with a heavy-duty continuous hinge on one side and 3-pt locking handle on the opposite side
- Consoles wider than 36 inches have double front access doors with heavy-duty continuous hinge and center locating 3-point locking handle which closes right side door over left
- Print pocket provided
- Panel cover, front door and top assembly covers have a fixed oil-resistant gasket
- Removable panel mounted on .375-16 collar studs is located behind the console body door
- Optional top assembly has a front-mounted instrument panel cover and rear-mounted access panel cover
- Optional writing desk is available for convenient front mounting

Discount Schedule: C2
Subclass: DR0

Console Body	Console Body Size Height x Width x Depth A x B x C		Panel Size Optional Height x Width		Top Assembly Optional	Writing Desk
Catalog Number	in.	mm	in.	mm	Catalog Number	Catalog Number
AC-1224B	36.00 x 24.00 x 24.00	914 x 610 x 610	26.87 x 16.87	682 x 428	AC-1224T	AC-1224W*
AC-1236B	36.00 x 36.00 x 24.00	914 x 914 x 610	26.87 x 26.87	682 x 682	AC-1236T	AC-1236W*
AC-1248B	36.00 x 48.00 x 24.00	914 x 1219 x 610	26.87 x 38.87	682 x 987	AC-1248T	AC-1248W*

* Not UL or CSA listed

Notes: We can provide special sizes, finishes and other modifications. Consult the factory for your special requirements.

Console
Type 12 - AW-12
Illustration Sheet

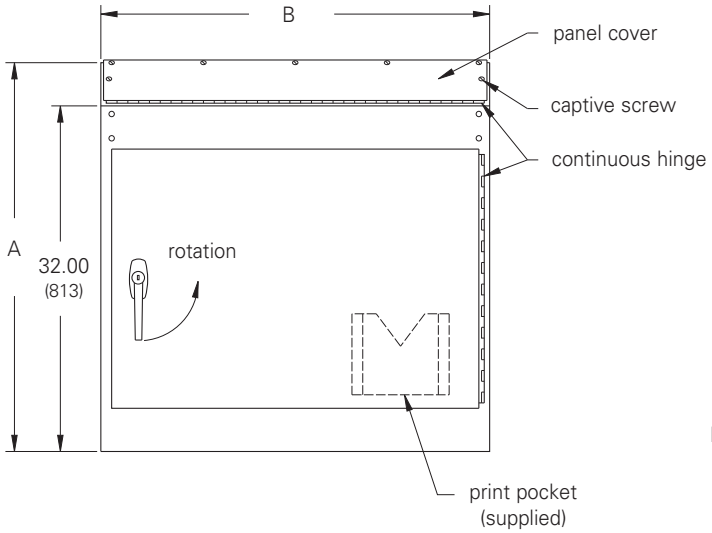

Console Body Front View
(24 inch & 36 inch wide body)

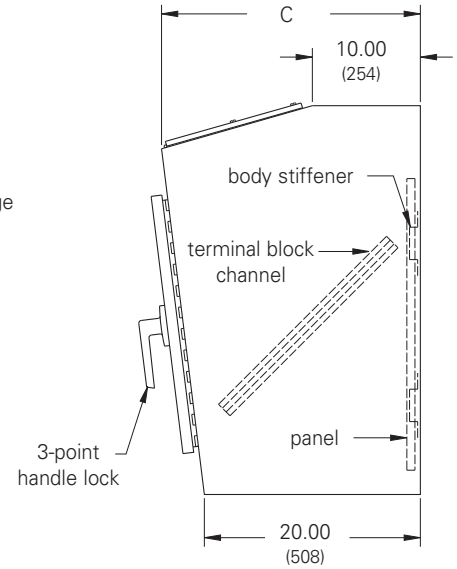

Side View

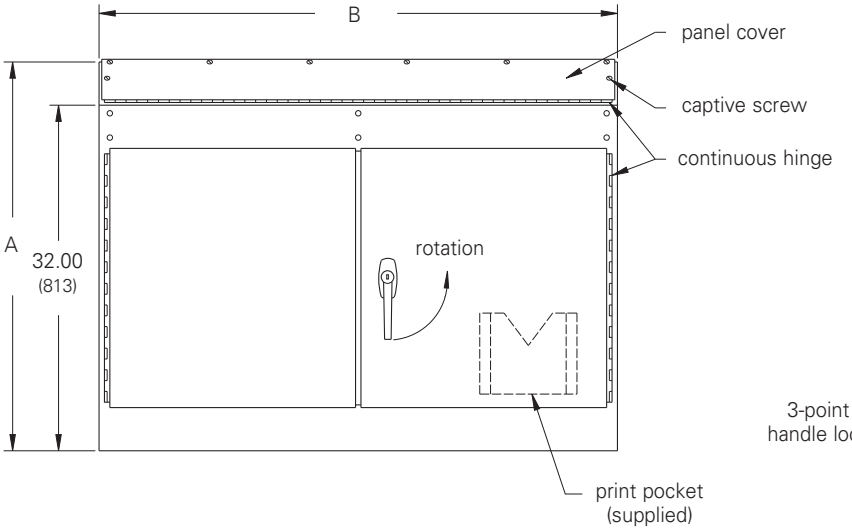

Console Body Front View
(48 inch wide body)

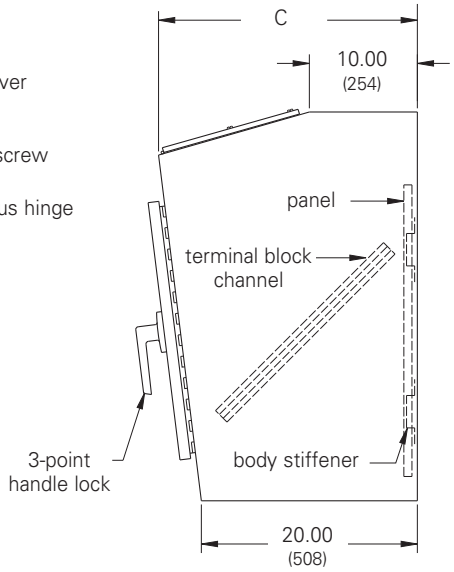

Side View

Notes: Dimensions are in inches. Millimeters shown are for reference only. Data subject to change without notice.

Console
Type 12 - AW-12
Illustration Sheet

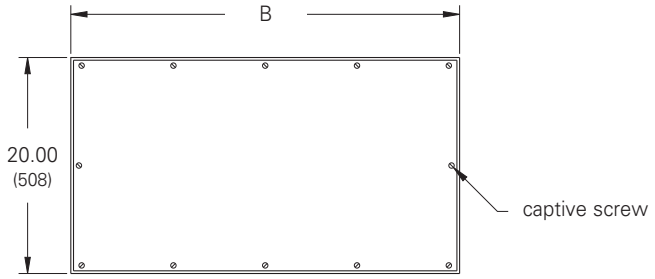

Top Assembly
Front View

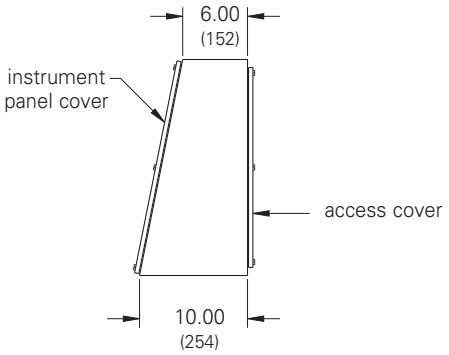

Side View

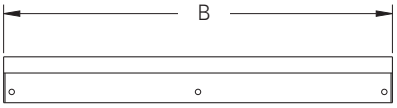

Writing Desk
Front View
(*not UL or CSA listed)

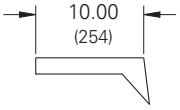

Side View

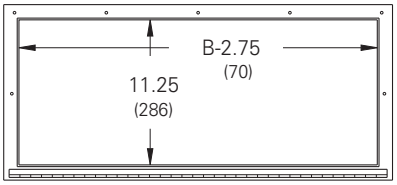

Panel Cover Opening
(panel cover removed)

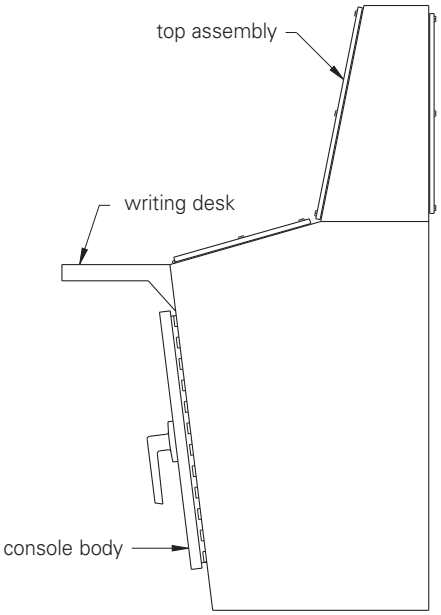

Typical Assembly

Notes: Dimensions are in inches. Millimeters shown are for reference only. Data subject to change without notice.

Console
Type 12 - AW-14
Data Sheet

Application
- Houses electrical controls and instruments
- Designed with a 60° angle top surface for pushbuttons, pilot lights, switches or other monitoring devices
- Protects against circulating dust, falling dirt and dripping non-corrosive liquids

Standards
- UL 508A listed, Type 12
- CSA C22.2 No.94 certified, Type 12
- Conforms to NEMA standard for Type 12

Construction
- Console body, panel cover and door, top assembly and writing desk are fabricated from (14) gauge steel
- All continuous welded seams are finished smooth
- Panel cover is secured to the body with a continuous hinge along the front side and captive screws which thread into sealed well nuts on the other three sides
- Cover stops allow the panel cover to be held in the open position
- Consoles 36 inches wide or less have a single front and rear access door with a heavy-duty continuous hinge on one side and a 3-point locking handle on the opposite side
- Consoles wider than 36 inches have double front and rear access doors with a heavy-duty continuous hinge and a center locating 3-point locking handle which closes right side door over left
- Mounting channels are welded inside for locating optional panel along console depth
- Front door has a print pocket
- Panel cover, front door and top assembly covers have fixed oil-resistant gaskets
- Optional top assembly has front mounted instrument panel cover(s) and rear mounted access panel cover(s)
- An optional writing desk is available with convenient front mounting

Finish
- Wash and phosphate undercoat
- ANSI 61 gray polyester powder finish
- Optional top assembly and writing desk have an ANSI 61 gray polyester powder finish

Accessories
- NEMA terminal strap kit
- Terminal blocks
- Swing panels
- Full and half panels
- Channel mounting hardware
- Caster kit
- Touch-up paint
- Replacement handle, 25228C, see page 426
- See Accessories section

Discount Schedule: C2
Subclass: DR0

Notes: We can provide special sizes, finishes and other modifications. Consult the factory for your special requirements

Console
Type 12 - AW-14
Illustration Sheet and Catalog Number

Console Body Catalog Number	Console Body Size Height x Width x Depth A x B x C in.	mm	Top Assembly Optional Catalog Number	Writing Desk Optional Catalog Number
AC-1424B	50.00 x 24.00 x 23.00	1270 x 610 x 584	AC-1424T	AC-1424W*
AC-1436B	50.00 x 36.00 x 23.00	1270 x 914 x 584	AC-1436T	AC-1436W*
AC-1448B	50.00 x 48.00 x 23.00	1270 x 1219 x 584	AC-1448T	AC-1448W*
AC-1460B	50.00 x 60.00x 23.00	1270 x 1524 x 584	AC-1460T	AC-1460W*
AC-1472B	50.00 x 72.00 x 23.00	1270 x 1829 x 584	AC-1472T	AC-1472W*

* Not UL or CSA listed

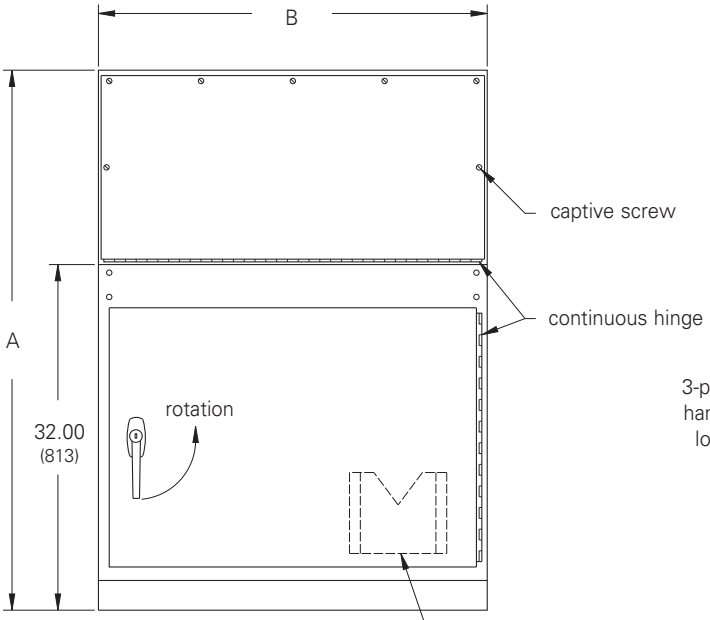

Console Body
Front View
(24 inch & 36 inch wide body)

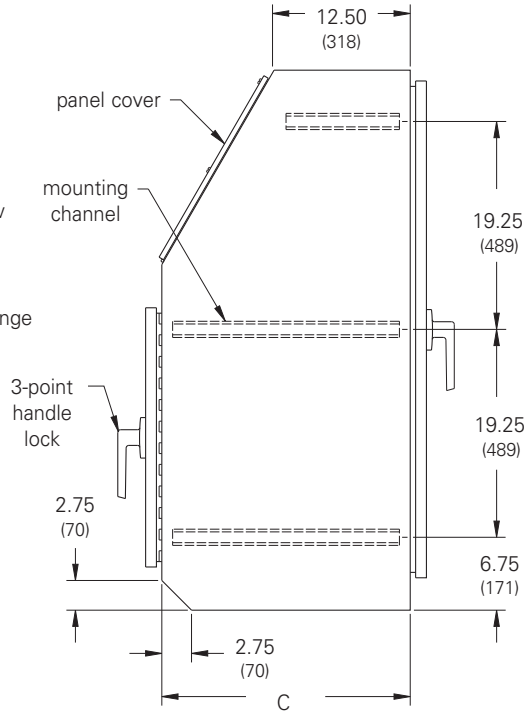

Side View

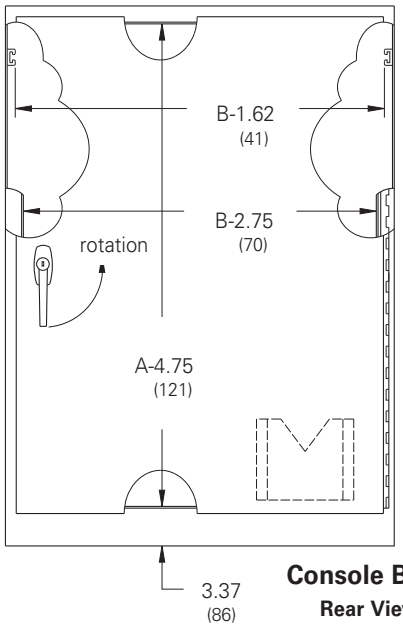

Console Body
Rear View

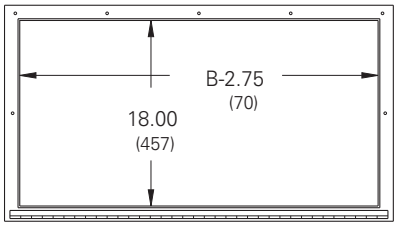

Panel Cover Opening
(panel cover removed)

Notes: Dimensions are in inches. Millimeters shown are for reference only. Data subject to change without notice.

Console
Type 12 - AW-14
Illustration Sheet

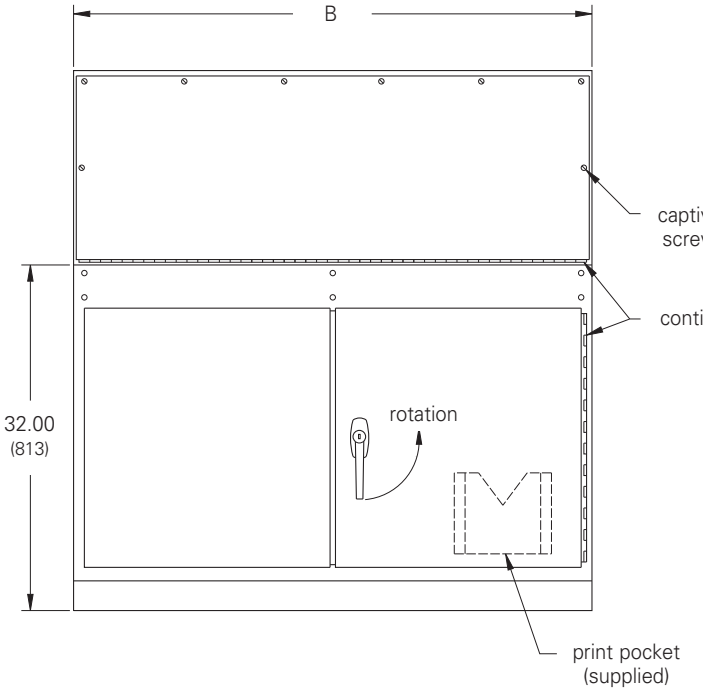

Console Body
Front View
(48 inch wide body)

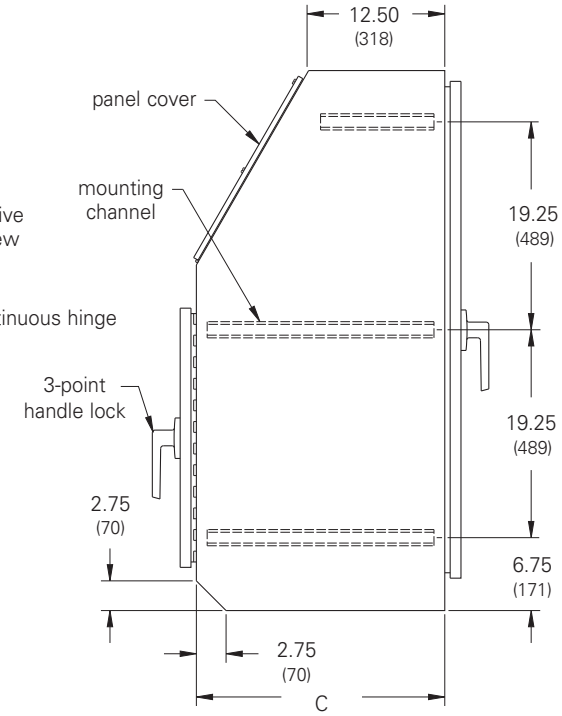

Side View

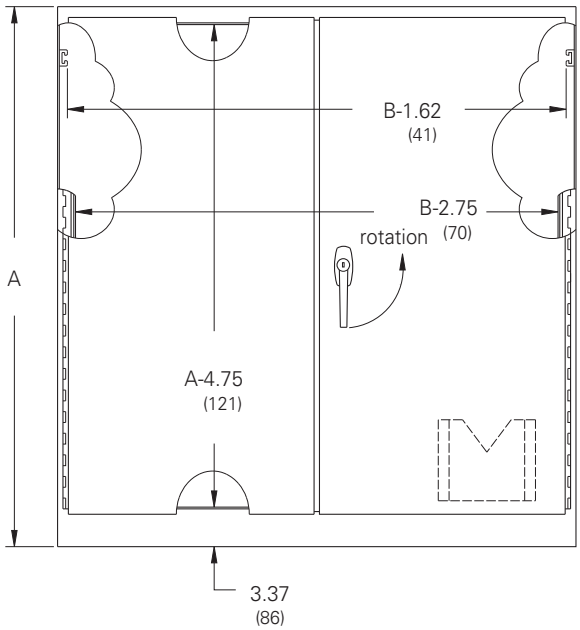

Console Body
Rear View

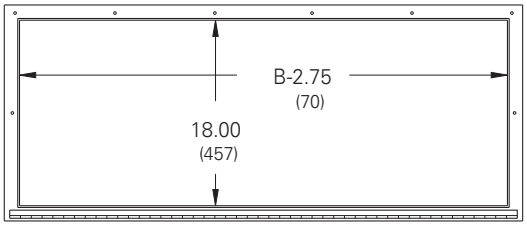

Panel Cover Opening
(panel cover removed)

Notes: Dimensions are in inches. Millimeters shown are for reference only. Data subject to change without notice.

Console
Type 12 - AW-14
Illustration Sheet

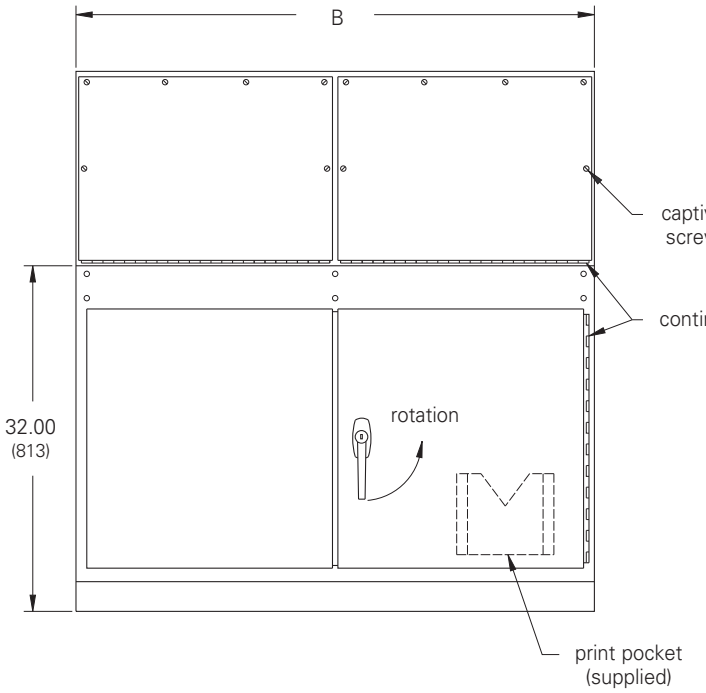

Console Body Front View
(60 inch & 70 inch wide body)

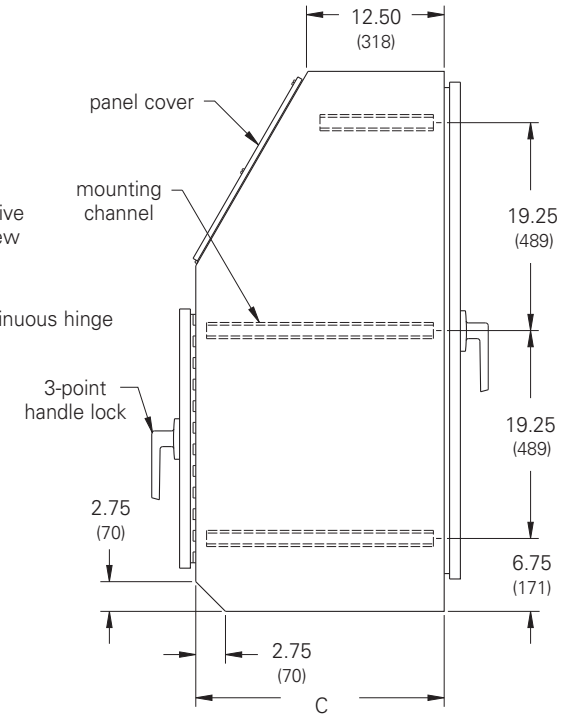

Side View

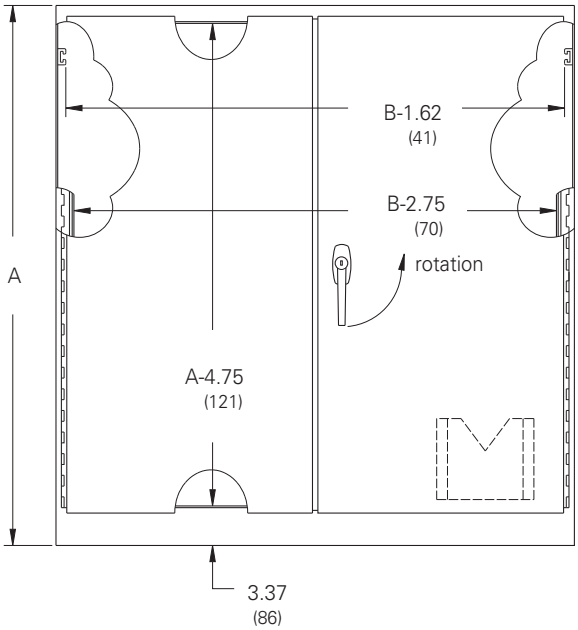

Console Body Rear View

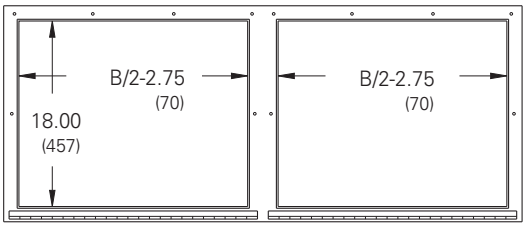

Panel Cover Opening
(panel cover removed)

Notes: Dimensions are in inches. Millimeters shown are for reference only. Data subject to change without notice.

Console
Type 12 - AW-14
Illustration Sheet

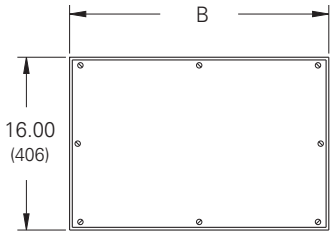

Top Assy Front View
(24 inch (610 mm) & 36 inch (914 mm) wide body)

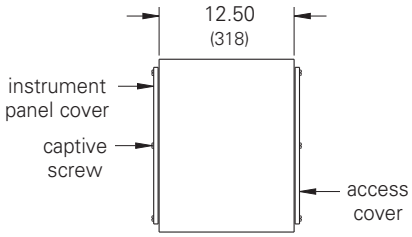

Side View
(typical all top assy)

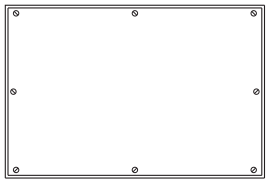

Top Assy Rear View
(24 inch (610 mm) & 36 inch (914 mm) wide body)

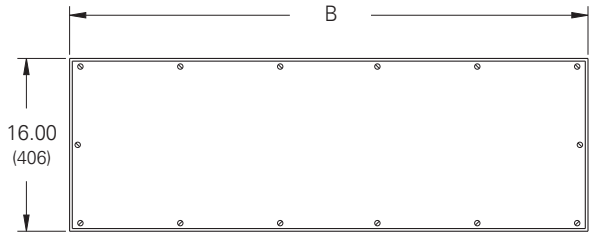

Top Assy Front View
(48 inch (1219 mm) wide body)

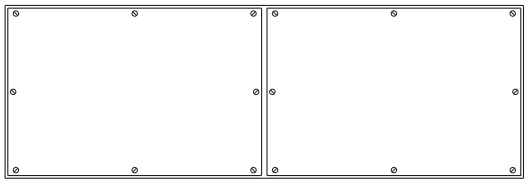

Top Assy Rear View
(48 inch (1219 mm) wide body)

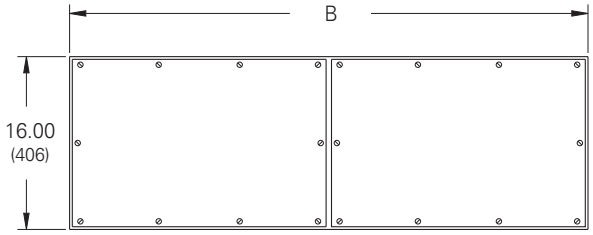

Top Assy Front View
(60 inch (1524 mm) & 72 inch (1829 mm) wide body)

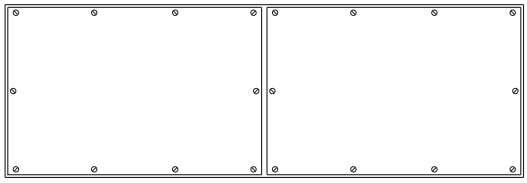

Top Assy Rear View
(60 inch (1524 mm) & 72 inch (1829 mm) wide body)

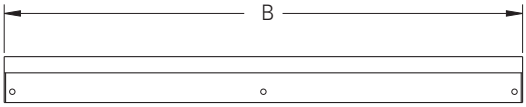

Writing Desk Front View
(* not UL or CSA listed)

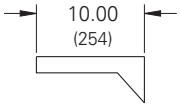

Side View

Notes: Dimensions are in inches. Millimeters shown are for reference only. Data subject to change without notice.

Console Accessories
Type 12 - AW-14
Full and Half Panel
Illustration Sheet and Catalog Number

Discount Schedule: C2
Subclass: DR0

Full Panel

Panel Catalog Number	Panel Size Height x Width A x B in.	mm	Fits Console Body Catalog Number
AC-1424P	40.12 x 19.87	1019 x 505	AC-1424B
AC-1436P	40.12 x 31.87	1019 x 809	AC-1436B
AC-1448P	40.12 x 43.87	1019 x 1114	AC-1448B
AC-1460P	40.12 x 55.87	1019 x 1419	AC-1460B
AC-1472P	40.12 x 67.87	1019 x 1724	AC-1472B

Half Panel

Panel Catalog Number	Panel Size Height x Width A x B in.	mm	Fits Console Body Catalog Number
AC-1424HP	20.87 x 19.87	530 x 505	AC-1424B
AC-1436HP	20.87 x 31.87	530 x 809	AC-1436B
AC-1448HP	20.87 x 43.87	530 x 1114	AC-1448B
AC-1460HP	20.87 x 55.87	530 x 1419	AC-1460B

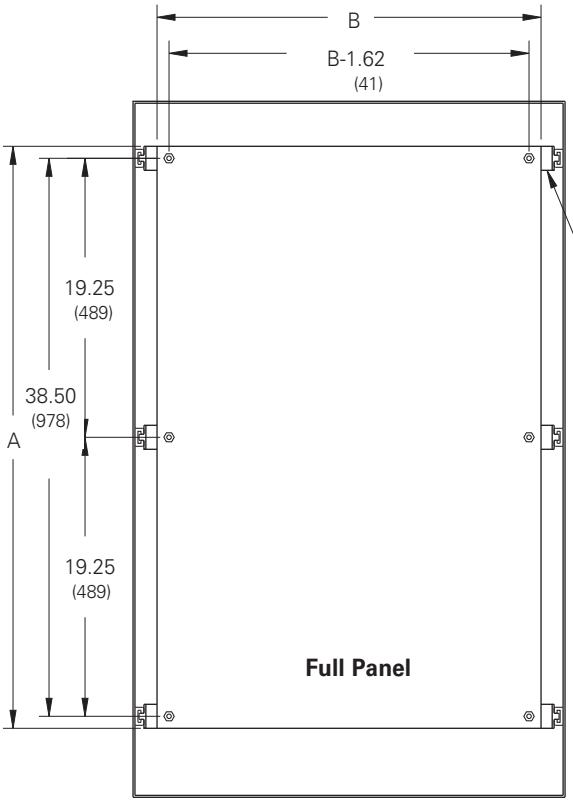

Full Panel Mounting

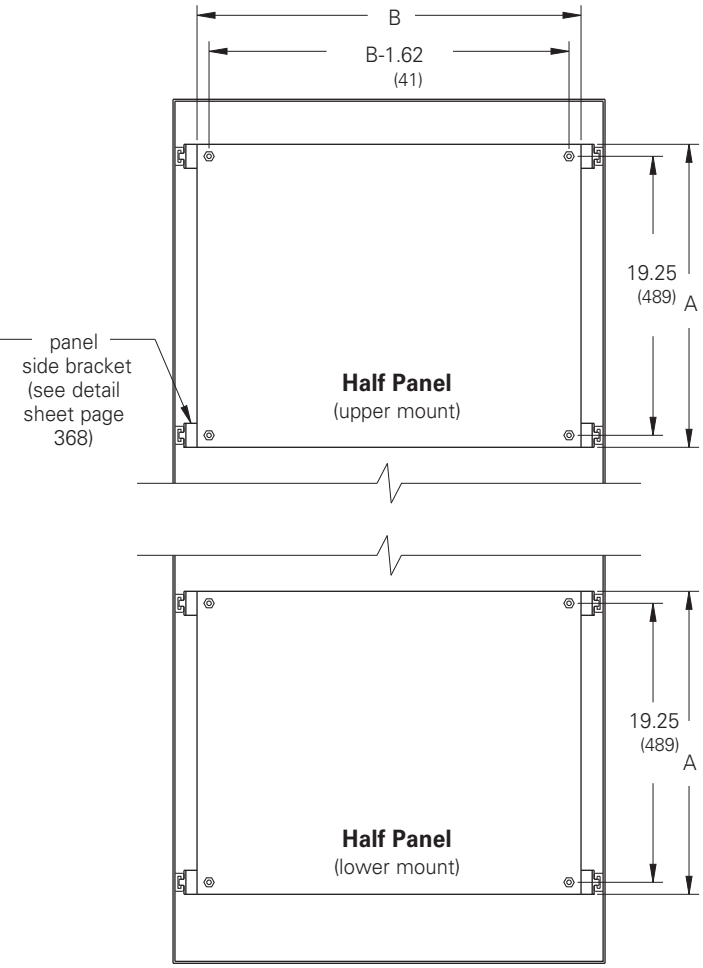

Half Panel Mounting

Full panel and half panel for consoles are (12) gauge steel and furnished with panel brackets and all hardware necessary for channel and panel mounting. Half panels can be mounted in either the upper or lower portion of the console. Console body design permits the panel to adjust along the depth of the enclosure. Full panel and half panel can be mounted back-to-back.

Notes: Dimensions are in inches. Millimeters shown are for reference only. Data subject to change without notice.

Console Accessories
Type 12 - AW-14
Swing Panel and Terminal Strap Kit
Illustration Sheet and Catalog Number

Discount Schedule: C2
Subclass: DR0

Swing Panel

Panel Catalog Number	Panel Size Height x Width A x B in.	mm	Fits Console Body Catalog Number
AC-1424SWP	40.12 x 18.75	1019 x 476	AC-1424B
AC-1436SWP	40.12 x 30.75	1019 x 781	AC-1436B

Terminal Strap Kit

Panel Catalog Number	Quantity of Straps	Fits Console Body Catalog Number
24TS20	4	All AW-14 Series
24TS24	5	All AW-14 Series

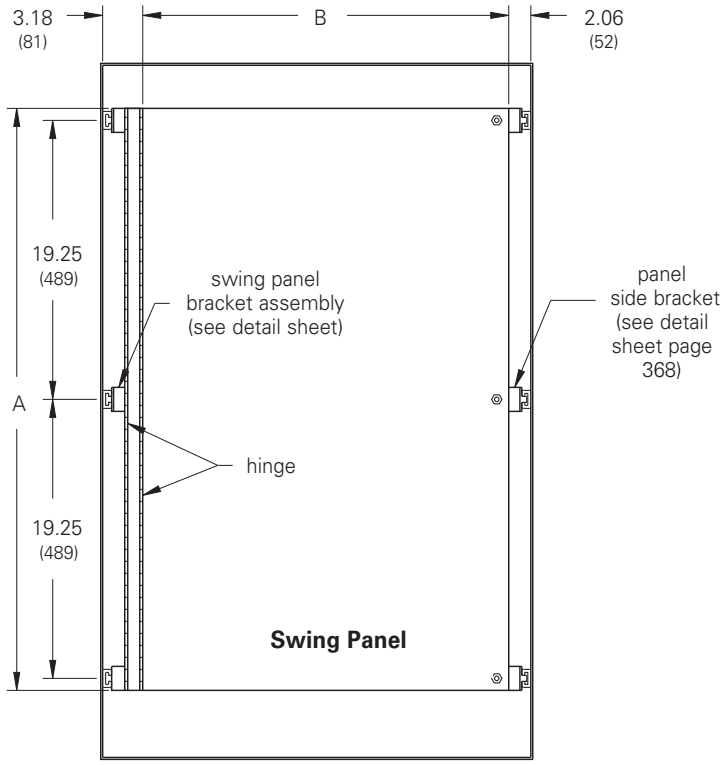

Swing Panel Mounting

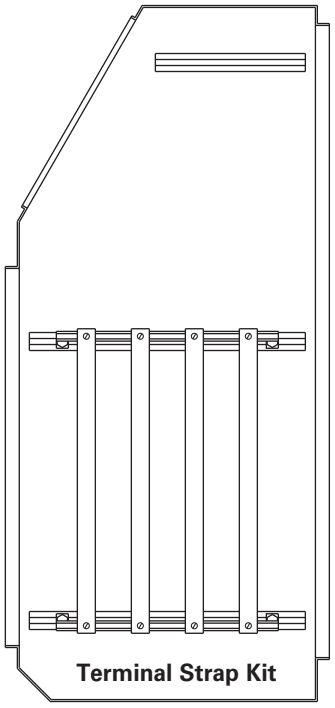

Terminal Strap Mounting

Swing Panel Mounting
Swing Panel for Consoles are (12) gauge steel, have a dual hinge swing panel bracket and are furnished with panel brackets and all hardware necessary for channel and panel mounting. Panels can be installed such that they hinge either on the left side or right side. Console body design permits the panel to adjust along the depth of the enclosure. The dual hinge allows the inner panel to swing completely out of the rear opening when within 5.50 inches. Panel and swing panel can be mounted back-to-back.

Terminal Strap Mounting
Terminal Strap Kits assemble conveniently to the channel on either side of the console body. Channel mounting hardware should be purchased separately for installation. Full length straps are furnished with adequate space for the users' terminal blocks or terminal blocks and extra straps can be purchased separately (see detail sheet and the Accessories section).

Notes: Dimensions are in inches. Millimeters shown are for reference only. Data subject to change without notice.

Console Accessories
Type 12 - AW-14

Discount Schedule: C2
Subclass: DR0

Illustration Sheet and Catalog Number

Catalog Number	Description	Fits Console Body	Illustration	Quantity
AFSBRKT1	Panel mounting bracket	AW-14 Series	1	1
AFCMH3	Channel mounting hardware	AW-14 Series	2	3
FTB3005	#18-#8 medium-duty flat base terminal block	AW-14 Series	3	1
FTE3001	Medium-duty flat base terminal block end	AW-14 Series	3	1
CTB3005	#18-#8 medium-duty channel terminal block	AW-12 Series	4	1
CTE3001	Medium-duty channel terminal block end	AW-12 Series	4	1
FT6005	#18-#4 heavy-duty flat base terminal block	AW-14 Series	3	1
FE6001	Heavy-duty flat base terminal block end	AW-14 Series	3	1
CT6005	#18-#4 heavy-duty channel terminal block	AW-12 Series	4	1
CE6001	Heavy-duty channel terminal block end	AW-12 Series	4	1
CTC2	Channel clamp	AW-12 Series	4	1
25012A	Channel Strip (72 inch)	AW-12 Series	-	1

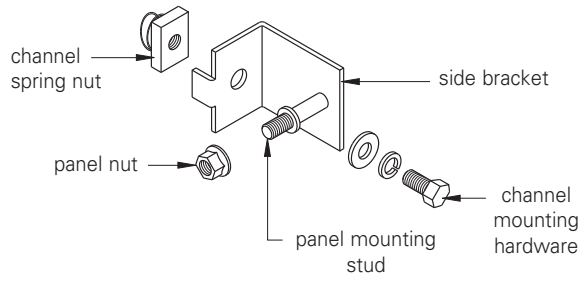

Illustration 1

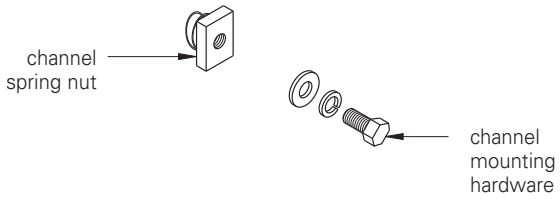

Illustration 2

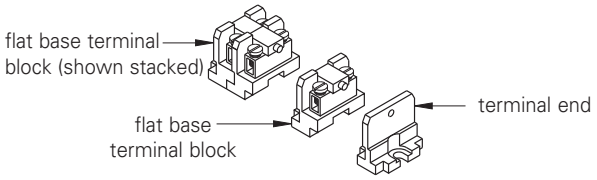

Individual terminal block and terminal end only. Heavy and Medium-duty blocks can be stacked to any length. When stocked, each block is approximately .43 or .56 inches long, depending on which block is used. For detail and specific quantity packages, refer to the Accessories section.

Illustration 3

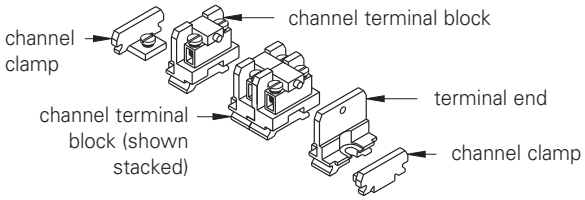

Individual terminal block, end, and clamps only. Heavy and Medium-duty blocks can be stacked to any length. When stacked, each block is approximately .43 or .56 inches long, depending on which block is used. For detail and specific quantity packages, refer to the Accessories section.

Illustration 4

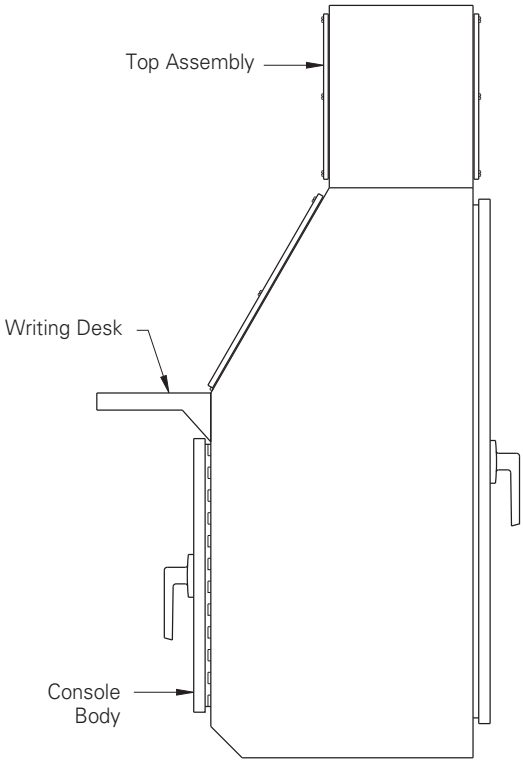

Typical Assembly

Notes: Dimensions are in inches. Millimeters shown are for reference only. Data subject to change without notice.

Console Details
Type 12 - AW-14
Panel and Console
Detail Sheet

Discount Schedule: C2
Subclass: DR0

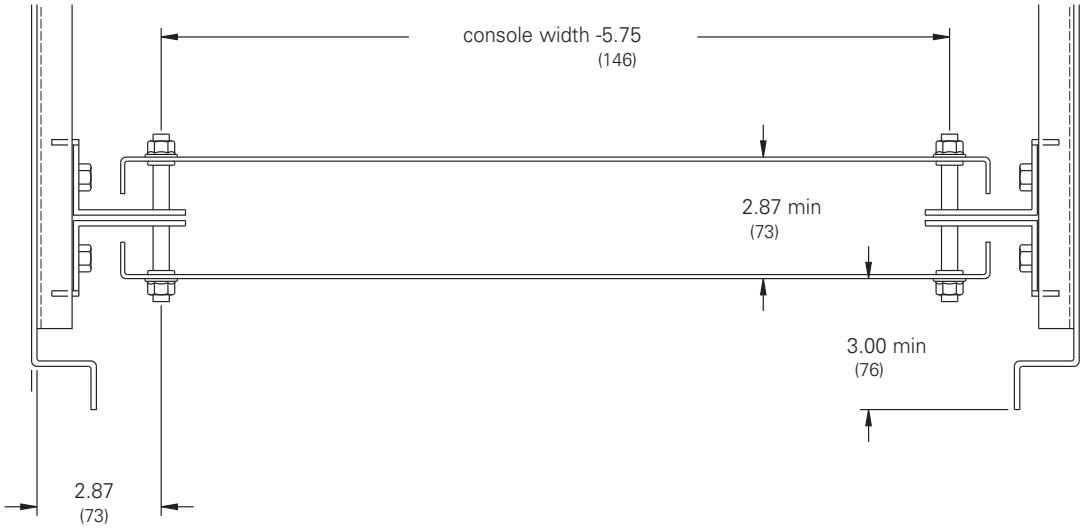

Console Rear Access Door
(section view showing full and half panel mounted back-to-back)

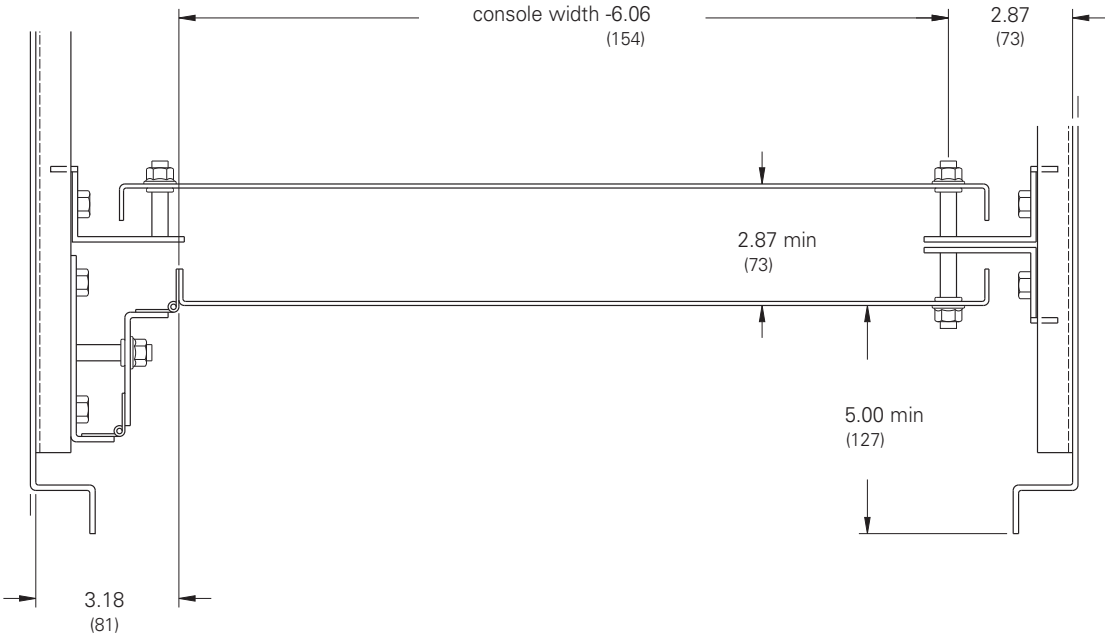

Console Rear Access Door
(section view showing swing panel and half panel mounted back-to-back)

Notes: Dimensions are in inches. Millimeters shown are for reference only. Data subject to change without notice.

Air Conditioner - General Specifications, Sizing, Selection, & Options 372-374
Air Conditioners NEMA 4 or 4X Guardian (DP15, DP21, DP33, DP47, DP50) 375-379
Air Conditioners 480 Volt NEMA 4 or 4X Guardian (DP24) 380
Air Conditioners 480 Volt NEMA 4 or 4X Guardian (DP38, DP52) 381-382
Air Conditioners NEMA 4 or 4X Slimcool Series (SP28, SP36, SP43) 383-385
Air Conditioners Top Mounted NEMA 12 Compact Series Horizontal 386
Air Conditioners Top Mounted NEMA 12 Compact Plus Series Horizontal 387
Filter Fans - NEMA 1 Box Fan 388
Filter Fans NEMA 3R Advantage Sentry Series 389
Filter Fans Filter-Grille Assemblies Advantage Sentry Series 390
Filter Fans NEMA 4 or 4X Guardian Series 391-392
Filter Fans Filter-Hood Assemblies Guardian Series 393
Filter Fans NEMA 12 Filter Fan, Grills, Replacement Filters 394-398
Heater Calculation Sheet 399
PTC Fan Heaters 400
PTC Heaters 401
Fan Heaters 402
Small Thermostats 403
Electronic Humidity and Temperature Controls 403

Enclosure Climate Control

Heat producing components currently widely used in electronic and industrial equipment enclosures present the problem of dissipating the heat generated before damage can occur to heat-sensitive parts. In many cases, the problem can be solved by ventilation, using simple air moving devices. However, in more and more applications the available ambient air is too warm or too contaminated to be used for the safe dissipation of the unwanted heat. Under those conditions, the life expectancy and performance of sensitive components may be adversely affected, often causing equipment malfunctions, slowdowns or failures.

In forced convection cooling of enclosures, cooler ambient air is drawn or forced through the components in an enclosure and discharged. When electronic/electrical enclosures are sealed to keep out moisture, dust, dirt and other contaminants, the heat generated by the components is trapped and closed-loop cooling (air conditioner or heat exchanger) is needed to maintain the optimum environment for the components.

*Our product offerings include an extensive array of units for virtually every type of application which customers can select from to address their enclosure ventilation or cooling requirement.

COOLING PRODUCT SELECTION

Our philosophy is to specify the smallest, least complex cooling device that will satisfy the requirements of the application.

Forced Ventilation Air Cooling

In clean, non-hazardous environments with acceptable ambient temperatures, a simple forced-air cooling system utilizing ambient air is usually adequate. Combined with a low-cost air filter, such devices generally meet the heat removal needs of typical electronic and electrical equipment.

Closed-Loop Cooling

In harsh environments involving high temperatures, heavy particulates, oil, or chemicals capable of damaging components, ambient air must be kept out of the enclosure. Sealed enclosures are generally used, with closed-loop cooling consisting of two separate circulation systems in a single unit. One system, sealed against the ambient air, cools and recirculates the clean cool air throughout the enclosure. The second system uses ambient air or water to remove and discharge the heat.

General Specifications for all Air Conditioners

CLOSED-LOOP COOLING: The enclosure interior airflow system is isolated from the ambient airflow system. No ambient air can invade the cool, dehumidified, sensitive component compartment.

BALL-BEARING MOTORS: All blower motors are UL/CSA Recognized and include automatic-reset thermal overload protection and double-sealed or double-shielded precision ball bearings. Special permanent lubricants perform over a broad temperature range: -20°F (-29°C) to 250°F (121°C). Tube axial fans are rated to perform at 14°F (-10°C) to 158°F (70°C) and are designed to meet UL, CSA and VDE.

BLOWERS: All centrifugal blowers are designed and built to provide optimum airflow and pressure for each air conditioner design.

RUGGED CONSTRUCTION: Precision-engineered heavy gauge steel construction of all shells and blowers ensures air conditioners will stand up under tough applications.*

BAKED POWDER FINISH: Durable, baked-on powder finish is standard. Other finishes are available.*

POWER: Units are available in 115 VAC, 230 VAC or 480 Volt.

REFRIGERANTS: CFC-free R134a Refrigerant is used in all air conditioners for which compatible compressors are available. All others contain Zero Ozone Depleting Potential (ODP) R410a Refrigerant. The model number reflects the refrigerant. A 4 between the A and C signifies R134a; a 6 signifies R410a.

FILTERS: Multi-layer grid of sturdy, corrugated aluminum in an aluminum frame. May be reused after washing off accumulations and spraying with A-16 Recoating Adhesive. Filters must be kept free of accumulations to prevent reduction or loss of performance and/or damage to equipment. Filters are not required on water-cooled models.

CONDENSATE DISPOSAL: Condensate drain fitting and hose are included. Built-in Condensate Evaporators are standard in many models. (See Series sections)

POWER CORD: All models have 3-wire power cords. 480 Volt models are supplied with an external junction box for permanent wiring as a Standard Feature. Single phase UL listed units are supplied with a plug.

INSULATION: All cold components, lines and the evaporator compartment are insulated with high-performance insulation for maximum efficiency.

GASKETING: All units are fully gasketed for tight, leakproof installation in compliance with the NEMA 12, 3R or 4/4X Enclosure Ratings.

QUALITY ASSURANCE: Refrigeration system components are kept sealed until charged with refrigerant; all brazed joints are thoroughly leak-tested; each unit is functionally tested before shipment.

INSTALLATION: Installation instructions, including mounting plan drawings, are included with each unit.

* See Guardian, Guardian 480 Volt for different specifications applicable.

Guardian Series, SlimKool Series, Compact Series, Compact Plus Series, and Advantage Series are brand names of KOOLTRONIC, Inc., Pennington, NJ

Air Conditioner Sizing and Selection

Climate Control

Cooling Electronic Control Cabinets

Most electronic control systems generate a substantial amount of heat during operation. This heat factor is intensified as electronic controls are made more compact, perform more functions and are placed in confined areas. Additional problems are encountered when the electronic process control system is located on-line in an industrial setting, rather than in a clean computer room. The factory environment can be hostile to the point that performance and effective life of the electronic components are materially reduced or the control system fails completely. Ambient temperature might be excessively high, as that found in a steel mill. Moisture-laden air and airborne particulate matter might be present to adversely affect the electronic components, as in the paper manufacturing industry. Air conditioners are designed to perform reliably under many of these harsh conditions and to provide the cooling and environmental protection required by sensitive electronic production control systems.

Factors Affecting Model Selection

This section is presented as a basic outline or checklist of the various application conditions to be considered when choosing a cooling unit. These are the factors which must be considered when selecting a cooling unit:

Internal Heat Load

This is the heat dissipated by the electronic controls. It is expressed in watts. One WATT equals 3.413 BTU/HR. Thus, to obtain the approximate cooling capacity required to remove a specific heat load, the following formula can be used: Watts x 3.413 - BTU/HR. For example, a heat load of 800 watts, require an air conditioner capable of removing at least 2,730 BTU/HR.

Resistance to Airflow in the Enclosure

Airflow is measured in cubic feet per minute (CFM). To create an air flow of any desired velocity requires that pressure be produced by the blower. Resistance to this blower-produced air flow is created by obstructions within the cabinet in the air flow path. The resistance itself is called static pressure (SP) and is measured in inches of water column.The effect of significant restrictions in the cabinet air flow path are as follows:

- the obstructions cause static pressure.
- static pressure results in a pressure drop, or differential, from the air velocity produced by the blower.
- this reduction in cool air flow will decrease the effective capacity of the cooling unit. Allowance must be made for static pressure.

Heat Load from the Surroundings

Ambient conditions can cause a heat gain in the enclosure. The rated capacity of the cooling unit must be sufficient to handle this heat gain. When evaluating the additional heat load gained from the surroundings there are two possible conditions:

- the cabinet is insulated and well sealed
- the cabinet is not insulated.

Cabinet Insulated - Normally, well-insulated cabinets do not gain sufficient heat from the surroundings to affect the air conditioner operation. BTU/HR ratings for Kooltronic air conditioners have been established at the maximum ambient operating temperature of 125˚F. A substantial improvement in heat removal occurs when operating in ambient temperatures below 125˚F.

Cabinet Not Insulated - Obviously, this design places more of a burden on the cooling unit. Heat is conducted to the cool side. Thus, high ambient heat will be readily transmitted into the cooler enclosure. To determine the additional capacity required of an air conditioner installed in an uninsulated cabinet, the surface area of the enclosure must be calculated to obtain the total effective heat transfer area. For this calculation, use the surface area of the sides, plus the area of the top and omit the bottom area of the cabinet.

Air movement outside the uninsulated cabinet will increase the heat conducted from the ambient into the enclosure. When there is little or no air circulation outside the cabinet, the layer of air immediately adjacent to the exterior cabinet walls acts as an insulating film. Exterior air movement dissipates this insulating layer of air in proportion to the velocity of the air flow. Substantial ambient air circulation will increase the transmitted heat load imposed on the cooling unit. If the cabinet being cooled is not air tight, high ambient relative humidity will adversely affect the cooling effectiveness of the air conditioner. When humid air infiltrates a poorly sealed enclosure, the air conditioner is required to use up valuable capacity just to condense the moisture from the internal air. Conversely, if the cabinet is well sealed, high ambient relative humidity has very little effect on the rated capacity of the air conditioner.

Air Conditioners Sizing & Selection

Climate Control

The proper selection of an air conditioner is determined by the following criteria:

1) Required cooling capacity BTU/HR.

2) Mounting requirements (top, side or internal mounting)

3) Dimensions of air conditioner & enclosure

To determine air conditioner capacity required:

First

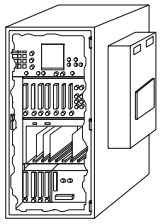

1 Watt = 3.413 BTU/HR
Determine the internal Watts of heat to be dissipated.

Second

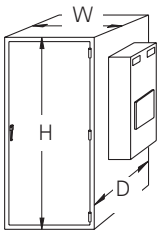

1 M^2 = 10.76 ft^2
Calculate the area of the enclosure which is exposed to the ambient air:

$$\frac{2H''(W''+D'')+(D''\times W'')}{144} = \text{Area } (ft^2)$$

Third

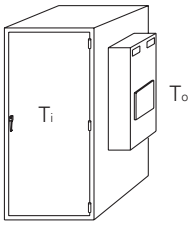

1˚C Δ T = 1.8˚FΔ T
Determine the temperature differential Δ T (˚ F) by subtracting the maximum allowable internal cabinet temperature (T_i) from the maximum ambient temperature outside of the enclosure (T_o): $T_o - T_i = \Delta T$

Fourth: (Watts x 3.413) + [1.25 x Area $ft.^2$ x Δ T (˚F)] = BTU/HR.

Air Conditioner Accessories and Options

Climate Control

Factory Installed Options

Accessories & Options

- Adapter Plates
- Compressor Heater
- Condensate Evaporator Kit
- Deep Drain Pan Kit
- Enclosure Heater
- Filter Recoating Adhesive
- Internal Corrosion Protection
- Lifting Eyes
- Low Airflow Detector
- Low Ambient Kit
- Mounting Hinge
- Programmable Thermostat
- Replacement Filters
- Short Cycle Protector
- Special Motors, Line Cords, or Connectors
- Special Materials or Finishes
- Stainless or Aluminum Cabinet
- Temperature Alarm
- Weather Protection Kit

Some options may not be available on selected models.
Some options are available as standard features on selected models.

Notes: Data subject to change without notice. Consult factory for special requirements.

Guardian DP15
NEMA 4 or 4X Air Conditioners

Model	NEMA Rating	BTU/H Capacity	95/95 Rating BTU/H	Ambient Temp. °F Max.	Ambient Temp. °F Min.	Ambient Temp. °C Max.	Ambient Temp. °C Min.	Volts	* Hz	** Running Amps	Weight lbs	Weight kg
KNA4C1DP15L	4	1160	950	131	-20	55	-29	115/100	60/50	4.3	26	12
KNA4C1DP15LV	4X	1160	950	131	-20	55	-29	115/100	60/50	4.3	26	12

* 115V 60 Hz models perform at reduced capacity when operated at 100V 50 Hz.
** Rating shown for operation at maximum ambient temperature.

Standard Features

- Baked Powder Finish
- Built-in Condensate Evaporator
- CFC-Free Refrigerant
- Closed-Loop Cooling
- Compressor Short Cycle Protector
- Epoxy-Coated Condenser Coils
- Filter
- Heavy-duty Steel Shell
- Internal Corrosion Protection (NEMA 4X Models)
- Low Temperature Control Thermostat*
- NEMA 12, 3R and 4 Ratings Maintained (UL50)
- Six-Foot [1.8m] (Minimum) 3-Wire Power Cord
- Stainless Steel Shell (NEMA 4X Models)
- UL/CUL Listed

* Transitioning to programmable controls

Accessories & Options

- Enclosure Heater
- Filter Recoating Adhesive
- Lead-Lag Controller
- Remote Thermostat Relay
- Replacement Filters (P/N: 525F)
- Special Motors, Line Cords or Connectors
- Special Paint Finishes
- Stainless or Aluminum Shell

c UL us **NEMA** TYPE 4 OR 4X MAINTAINED

Performance

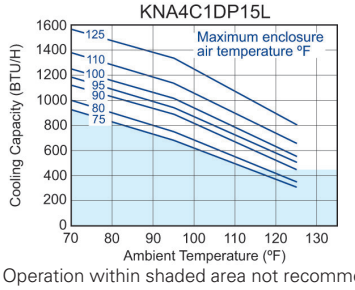

Operation within shaded area not recommended.

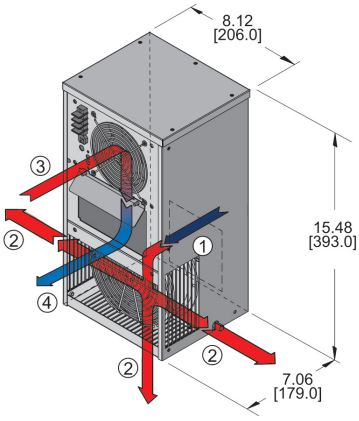

Drawings

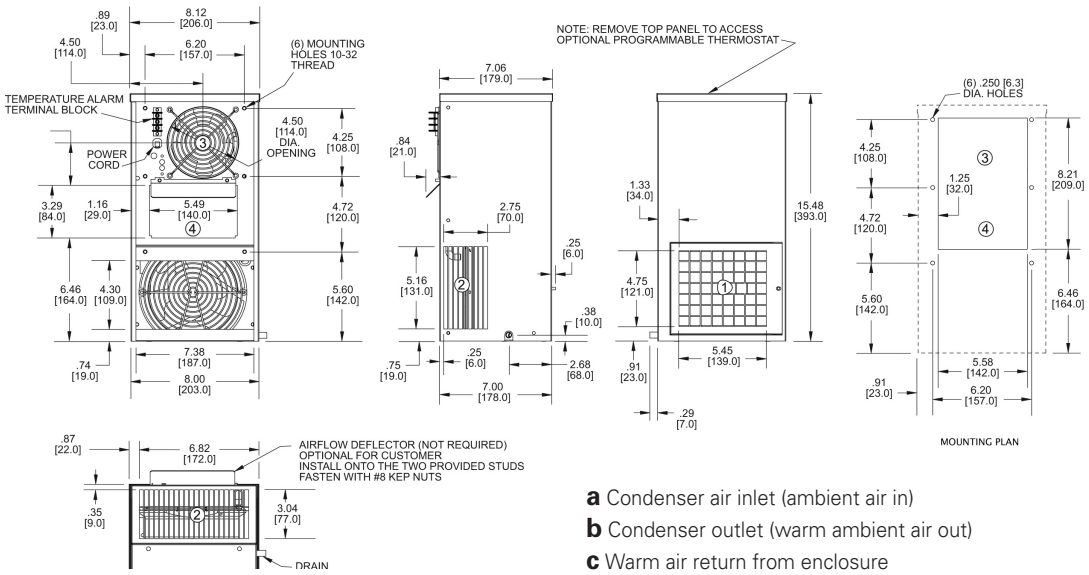

a Condenser air inlet (ambient air in)
b Condenser outlet (warm ambient air out)
c Warm air return from enclosure
d Cool air outlet to enclosure

Notes: Data subject to change without notice.
Consult factory for special requirements. Dimensions are in inches. Millimeters shown in [ ] are for reference only.

Guardian DP21
NEMA 4 or 4X Air Conditioners

Model	NEMA Rating	BTU/H Capacity	95/95 Rating BTU/H	Ambient Temp. °F Max.	Ambient Temp. °F Min.	Ambient Temp. °C Max.	Ambient Temp. °C Min.	Volts	* Hz	** Running Amps	Weight lbs	Weight kg
KNA4C3DP21L	4	3000	2470	131	-20	55	-29	115/100	60/50	6.0/5.0	54	25
KNA4C3DP21LV	4X	3000	2470	131	-20	55	-29	115/100	60/50	6.0/5.0	54	25

* 115V 60 Hz models perform at reduced capacity when operated at 100V 50 Hz.
** Rating shown for operation at maximum ambient temperature.

Standard Features

- Baked Powder Finish
- Built-in Condensate Evaporator
- CFC-Free Refrigerant
- Closed-Loop Cooling
- Compressor Short Cycle Protector
- Condenser Blower Controller
- Epoxy-Coated Condenser Coils
- Filter
- Heavy-duty Steel Shell
- Internal Corrosion Protection (NEMA 4X Models)
- Low Temperature Control Thermostat*
- NEMA 4 or 4X Rating Maintained (UL50)
- Six-Foot [1.8m] (Minimum) 3-Wire Power Cord
- Stainless Steel Shell (NEMA 4X Models)
- UL/CUL Listed

* Transitioning to programmable controls

Accessories & Options

- Enclosure Heater
- Filter Recoating Adhesive
- Lead-Lag Controller
- Remote Thermostat Relay
- Replacement Filters (P/N: 8388F)
- Special Motors, Line Cords or Connectors
- Special Paint Finishes
- Stainless or Aluminum Shell

NEMA TYPE 4 OR 4X MAINTAINED

Performance

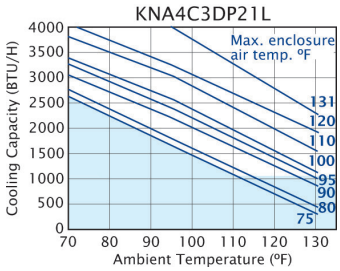

Operation within shaded area not recommended.

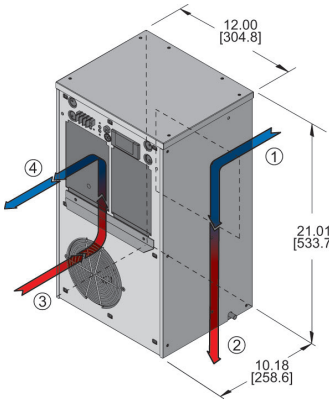

Drawings

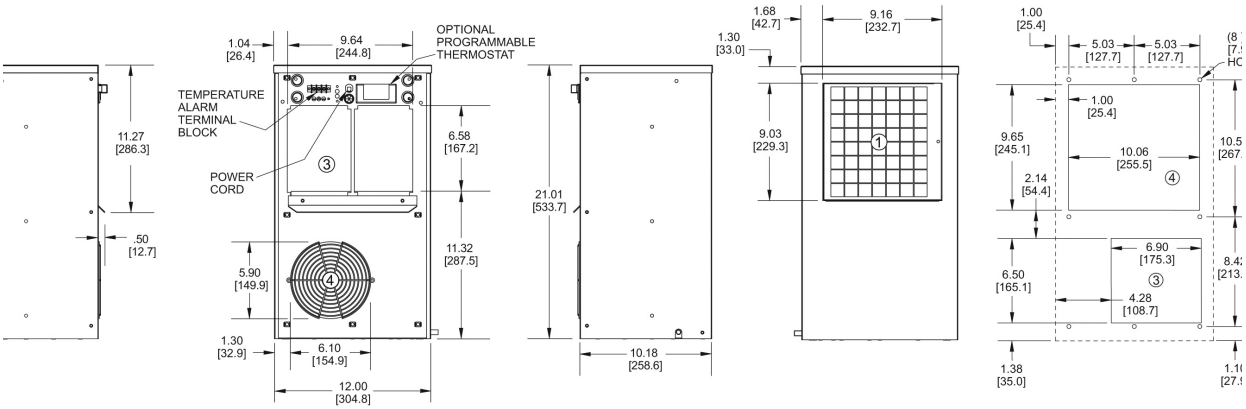

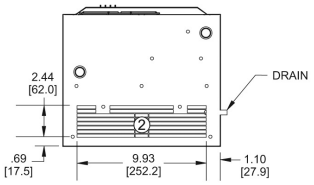

a Condenser air inlet (ambient air in)
b Condenser outlet (warm ambient air out)
c Warm air return from enclosure
d Cool air outlet to enclosure

Notes: Data subject to change without notice.
Consult factory for special requirements. Dimensions are in inches. Millimeters shown in [ ] are for reference only.

Guardian DP33
NEMA 4 or 4X Air Conditioners

Model	NEMA Rating	BTU/H Capacity	95/95 Rating BTU/H	Ambient Temp. °F Max.	Ambient Temp. °F Min.	Ambient Temp. °C Max.	Ambient Temp. °C Min.	Volts	* Hz	** Running Amps	Weight lbs	Weight kg
KNA4C5DP33L	4	5000	4000	131	-20	55	-29	115/100	60/50	10.6/10.2	95	43
KNA4C5DP33LV	4X	5000	4000	131	-20	55	-29	115/100	60/50	10.6/10.2	95	43

* 115V 60 Hz models perform at reduced capacity when operated at 100V 50 Hz.
** Rating shown for operation at maximum ambient temperature.

Standard Features

- Baked Powder Finish
- Built-in Condensate Evaporator
- CFC-Free Refrigerant
- Condenser Impeller Speed Controller
- Epoxy-Coated Condenser Coils
- Filter
- Heavy-duty Steel Shell
- Internal Corrosion Protection (NEMA 4X Models)
- Low Temperature Control Thermostat*
- NEMA 4 or 4X Rating Maintained (UL50)
- Six-Foot [1.8m] (Minimum) 3-Wire Power Cord
- Stainless Steel Shell (NEMA 4X Models)
- UL/CUL Listed

* Transitioning to programmable controls

Accessories & Options

- Compressor Short Cycle Protector
- Enclosure Heater
- Filter Recoating Adhesive
- Lead-Lag Controller
- Other Voltages and Frequencies
- Remote Thermostat Relay
- Replacement Filters (P/N: 9501F)
- Special Motors, Line Cords or Connectors
- Special Materials and Finishes
- Temperature Alarm
- Available in 230V Models

NEMA TYPE 4 OR 4X MAINTAINED

Performance

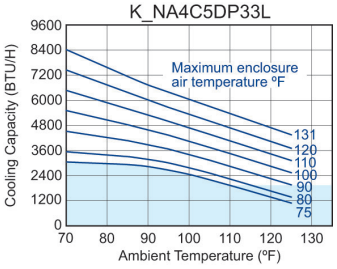

Operation within shaded area not recommended.

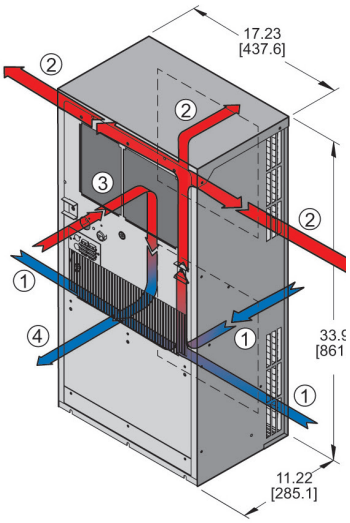

Drawings

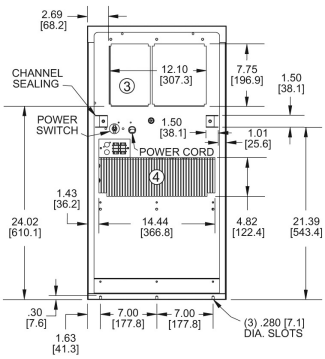

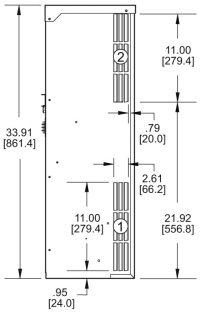

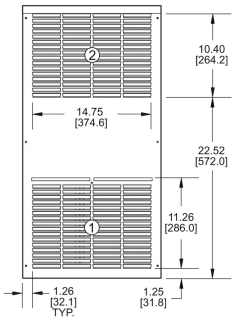

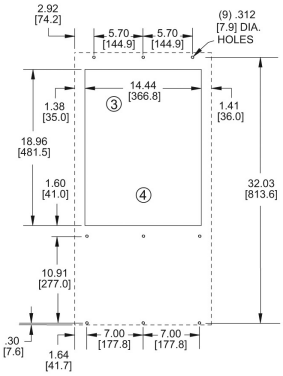

MOUNTING PLAN

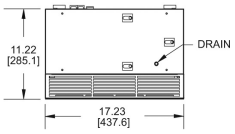

a Condenser air inlet (ambient air in)
b Condenser outlet (warm ambient air out)
c Warm air return from enclosure
d Cool air outlet to enclosure

Notes: Data subject to change without notice.
Consult factory for special requirements. Dimensions are in inches. Millimeters shown in [ ] are for reference only.

Guardian DP47
NEMA 4 or 4X Air Conditioners

Model	NEMA Rating	BTU/H Capacity	95/95 Rating BTU/H	Ambient Temp. °F Max.	Ambient Temp. °F Min.	Ambient Temp. °C Max.	Ambient Temp. °C Min.	Volts	* Hz	** Running Amps	Weight lbs	Weight kg
KNA4C9DP47L	4	9000	7400	131	-20	55	-29	115/100	60/50	19.2	135	61
KNA4C9DP47LV	4X	9000	7400	131	-20	55	-29	115/100	60/50	19.2	135	61

* 115V 60 Hz models perform at reduced capacity when operated at 100V 50 Hz.
** Rating shown for operation at maximum ambient temperature.

Standard Features

- Baked Powder Finish
- Built-in Condensate Evaporator
- CFC-Free Refrigerant
- Condenser Impeller Speed Controller
- Epoxy-Coated Condenser Coils
- Filter
- Heavy-duty Steel Shell
- Internal Corrosion Protection (NEMA 4X Models)
- Low Temperature Control Thermostat*
- NEMA 4 or 4X Rating Maintained (UL50)
- Six-Foot [1.8m] (Minimum) 3-Wire Power Cord
- Stainless Steel Shell (NEMA 4X Models)
- UL/CUL Listed

* Transitioning to programmable controls

Accessories & Options

- Compressor Short Cycle Protector
- Enclosure Heater
- Filter Recoating Adhesive
- Lead-Lag Controller
- Other Voltages and Frequencies
- Remote Thermostat Relay
- Replacement Filters (P/N: 8001F)
- Special Motors, Line Cords or Connectors
- Special Materials and Finishes
- Temperature Alarm
- Available in 230V Models

NEMA TYPE 4 OR 4X MAINTAINED

Performance

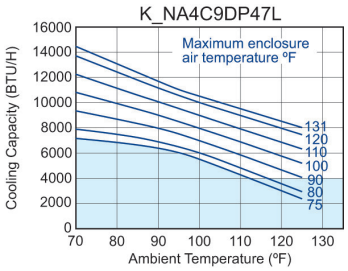

Operation within shaded area not recommended.

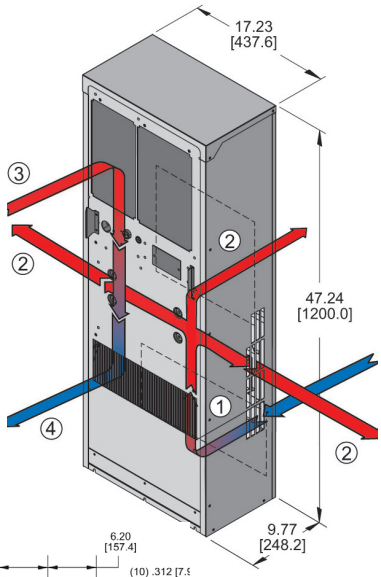

Drawings

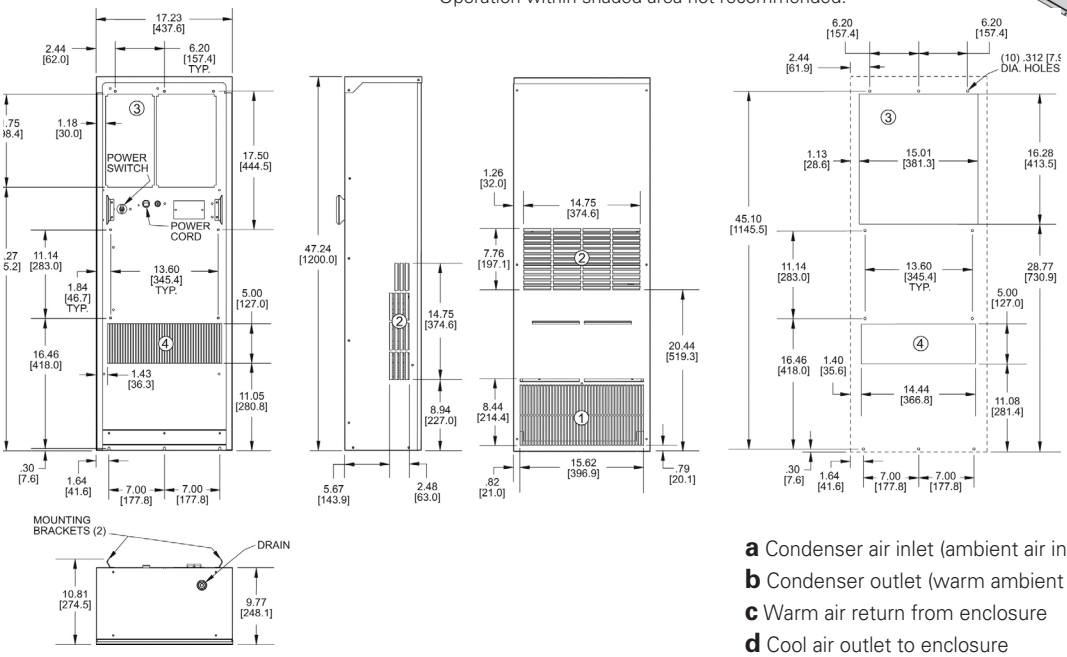

a Condenser air inlet (ambient air in)
b Condenser outlet (warm ambient air out)
c Warm air return from enclosure
d Cool air outlet to enclosure

Notes: Data subject to change without notice.
Consult factory for special requirements. Dimensions are in inches. Millimeters shown in [ ] are for reference only.

Guardian DP50
NEMA 4 or 4X Air Conditioners

Model	NEMA Rating	BTU/H Capacity	95/95 Rating BTU/H	Ambient Temp. °F Max.	Ambient Temp. °F Min.	Ambient Temp. °C Max.	Ambient Temp. °C Min.	Volts	* Hz	** Running Amps	Weight lbs	Weight kg
K2NA6C14DP50L	4	14000	13000	131	-20	55	-29	230	60	13.5	207	94
K2NA6C14DP50LV	4X	14000	13000	131	-20	55	-29	230	60	13.5	207	94

* 115V 60 Hz models perform at reduced capacity when operated at 100V 50 Hz.
** Rating shown for operation at maximum ambient temperature.

Standard Features

- Baked Powder Finish
- Built-In Condensate Evaporator
- Closed-Loop Cooling
- Condenser Blower Controller
- Epoxy-Coated Condenser Coils
- Filters (2)
- Heavy-duty Steel Shell
- Internal Corrosion Protection (NEMA 4X Models)
- Low Temperature Control Thermostat*
- NEMA 4 or 4X Rating Maintained (UL50)
- Six-Foot [1.8m] (Minimum) 3-Wire Power Cord
- Stainless Steel Shell (NEMA 4X Models)
- UL/CUL Listed
- Zero ODP Refrigerant

* Transitioning to programmable controls

Accessories & Options

- Compressor Short Cycle Protector
- Enclosure Heater
- Filter Recoating Adhesive
- Lead-Lag Controller
- Other Voltages and Frequencies
- Remote Thermostat Relay
- Replacement Filters (P/N: 13658F)
- Special Motors, Line Cords or Connectors
- Special Materials and Finishes
- Temperature Alarm

NEMA TYPE 4 OR 4X MAINTAINED

Performance

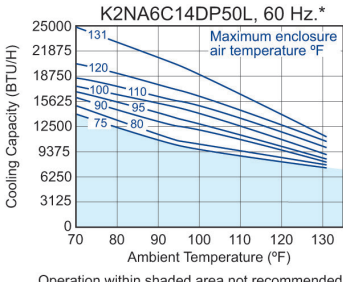

Operation within shaded area not recommended.
* Operation at 50Hz will be 10% less.

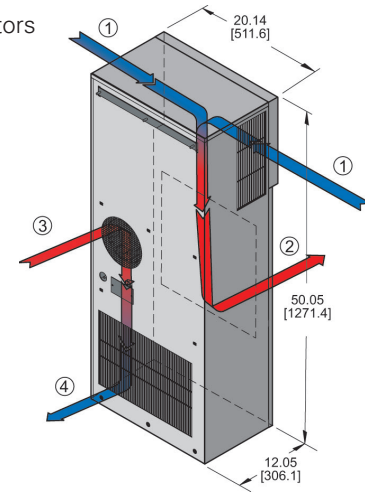

Drawings

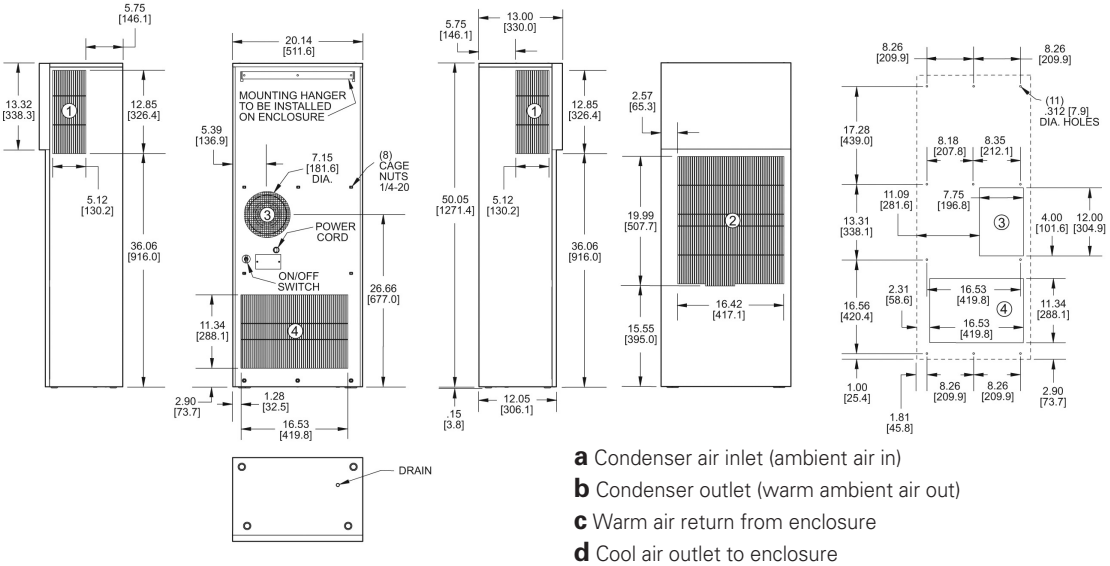

a Condenser air inlet (ambient air in)
b Condenser outlet (warm ambient air out)
c Warm air return from enclosure
d Cool air outlet to enclosure

Notes: Data subject to change without notice.
Consult factory for special requirements. Dimensions are in inches. Millimeters shown in [ ] are for reference only.

Guardian Series DP24
480 Volt 1-Phase NEMA 4 or 4X Air Conditioners

Model	NEMA Rating	BTU/H Capacity	95/95 Rating BTU/H	Ambient Temp. °F Max.	Ambient Temp. °F Min.	Ambient Temp. °C Max.	Ambient Temp. °C Min.	Volts	Hz	* Running Amps	Weight lbs	Weight kg
K3NA4C3DP24L	4	3000	2500	125	-20	52	-29	480/1	60	1.4	61	27
K3NA4C3DP24LV	4X	3000	2500	125	-20	52	-29	480/1	60	1.4	61	27

* Rating shown for operation at maximum ambient temperature.

Standard Features

- Baked Powder Finish
- 480 Volt 1-Phase
- Built-In Condensate Evaporator
- CFC - Free Refrigerant
- Closed-Loop Cooling
- Compressor Short Cycle Protector
- Condenser Blower Controller
- Epoxy-Coated Condenser Coils
- Filter
- Heavy-duty Steel Shell
- Internal Corrosion Protection (NEMA 4X Models)
- Low Temperature Control Thermostat*
- NEMA 4 or 4X Rating Maintained (UL50)
- Stainless Steel Shell (NEMA 4X Models)
- UL/CUL Listed

* Transitioning to programmable controls

Accessories & Options

- Enclosure Heater
- Filter Recoating Adhesive
- Lead-Lag Controller
- Remote Thermostat Relay
- Replacement Filters (P/N: 8388F)
- Special Materials and Finishes
- Stainless or Aluminum Shell

c UL us NEMA TYPE 4 OR 4X MAINTAINED

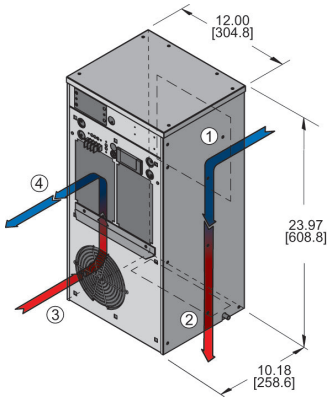

Performance

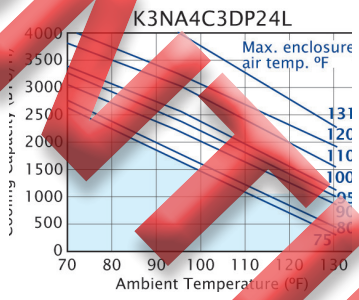

Operation within shaded area not recommended.

Drawings

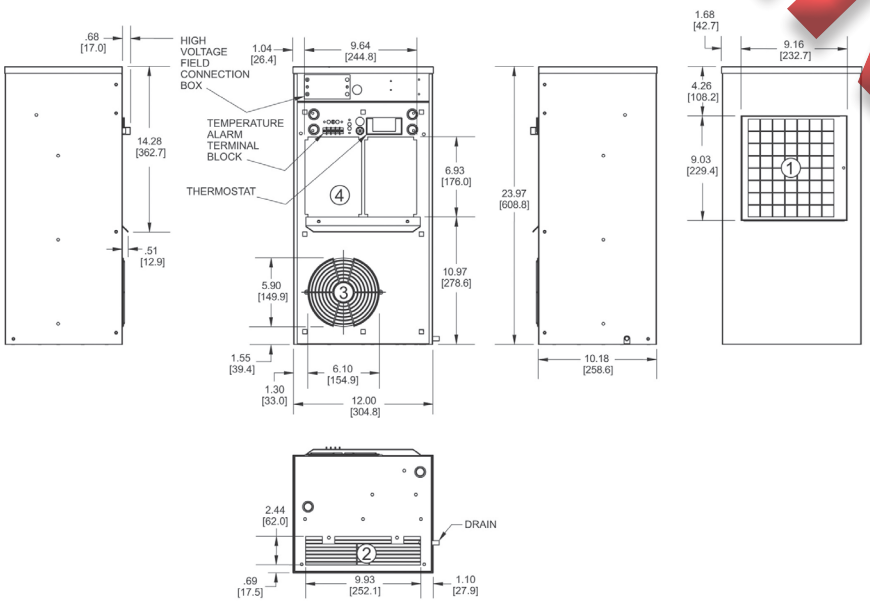

a Condenser air inlet (ambient air in)
b Condenser outlet (warm ambient air out)
c Warm air return from enclosure
d Cool air outlet to enclosure

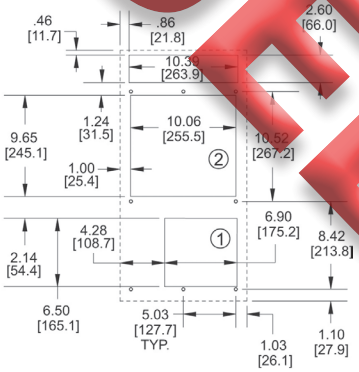

Notes: Data subject to change without notice.
Consult factory for special requirements. Dimensions are in inches. Millimeters shown in [ ] are for reference only.

DISCONTINUED

Guardian Series DP38
480 Volt 3-Phase NEMA 4 or 4X Air Conditioners

Model	NEMA Rating	BTU/H Capacity	95/95 Rating BTU/H	Ambient Temp. °F Max.	Ambient Temp. °F Min.	Ambient Temp. °C Max.	Ambient Temp. °C Min.	Volts	Hz	* Running Amps	Weight lbs	Weight kg
K3NA4C5DP38L	4	5000	4800	131	0	55	-18	480	60	2.0	115	52
K3NA4C5DP38LV	4X	5000	4800	131	0	55	-18	480	60	2.0	115	52

* Rating shown for operation at maximum ambient temperature.

DISCONTINUED

Standard Features

- Baked Powder Finish
- Built-In Condensate Evaporator
- CFC - Free Refrigerant
- Closed-Loop Cooling
- Condenser Impeller Speed Controller
- Epoxy-Coated Condenser Coils
- External Junction Box for Permanent Wiring Connections
- Filter
- Heavy-duty Steel Shell
- Internal Corrosion Protection (NEMA 4X Models)
- Low Temperature Control Thermostat*
- NEMA 4 or 4X Rating Maintained (UL50)
- Phase Sequence/Phase Loss Detector/ Under Voltage Monitor
- Stainless Steel Shell (NEMA 4X Models)
- UL/CUL Listed

* Transitioning to programmable controls

Accessories & Options

- Compressor Short Cycle Protector
- Enclosure Heater
- Filter Recoating Adhesive
- Lead-Lag Controller
- Remote Thermostat Relay
- Replacement Filters (P/N: 9501F)
- Special Paint Finishes
- Temperature Alarm

NEMA TYPE 4 OR 4X MAINTAINED

Performance

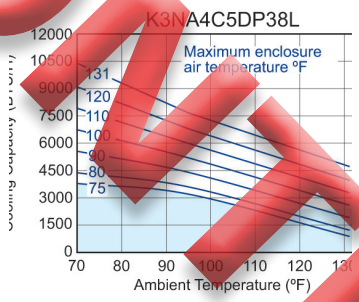

Operation within shaded area not recommended

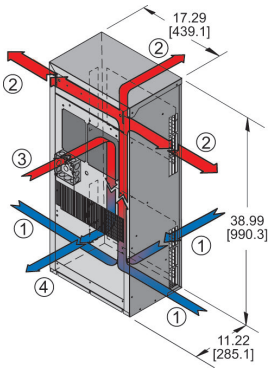

Drawings

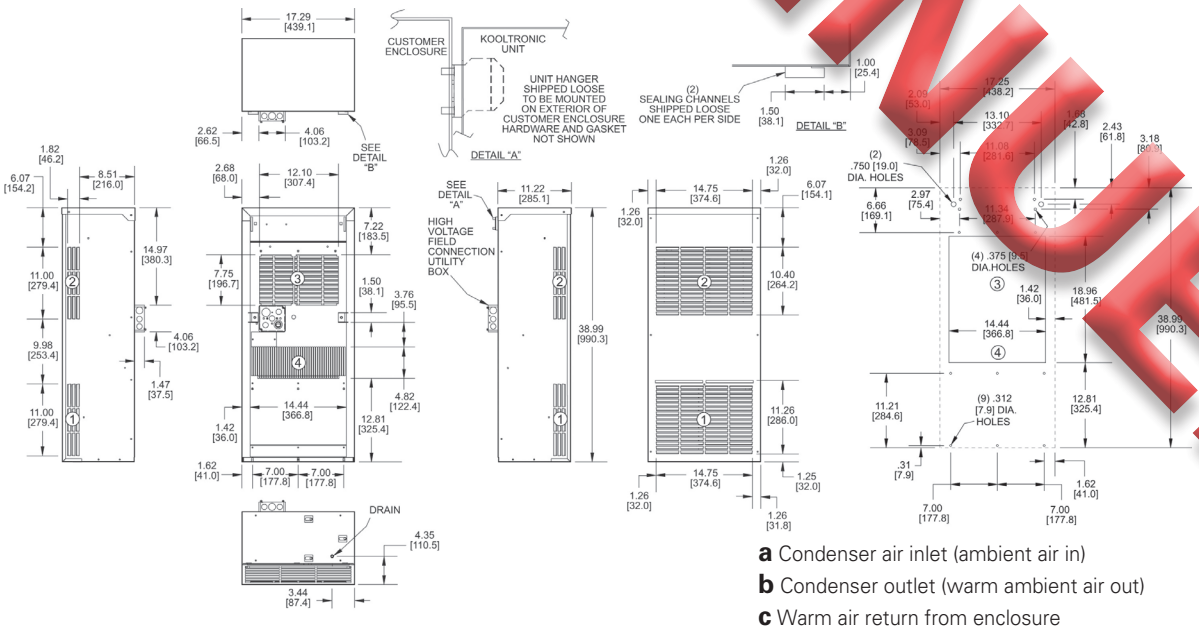

a Condenser air inlet (ambient air in)
b Condenser outlet (warm ambient air out)
c Warm air return from enclosure
d Cool air outlet to enclosure

Notes: Data subject to change without notice.
Consult factory for special requirements. Dimensions are in inches. Millimeters shown in [ ] are for reference only.

Guardian Series DP52
480-Volt 3-Phase NEMA 4 or 4X Air Conditioners

Model	NEMA Rating	BTU/H Capacity	95/95 Rating BTU/H	Ambient Temp. °F Max.	Ambient Temp. °F Min.	Ambient Temp. °C Max.	Ambient Temp. °C Min.	Volts	Hz	* Running Amps	Weight lbs	Weight kg
K3NA4C7DP52L	4	7000	6300	131	0	55	-18	480	60	3.0	160	72
K3NA4C7DP52LV	4X	7000	6300	131	0	55	-18	480	60	3.0	160	72
K3NA4C9DP52L	4	9000	8100	131	0	55	-18	480	60	4.0	164	75
K3NA4C9DP52LV	4X	9000	8100	131	0	55	-18	480	60	4.0	164	75

* Rating shown for operation at maximum ambient temperature.

Standard Features

- Baked Powder Finish
- Built-In Condensate Evaporator
- CFC - Free Refrigerant
- Closed-Loop Cooling
- Condenser Impeller Speed Controller
- Epoxy-Coated Condenser Coils
- External Junction Box for Permanent Wiring Connections
- Filter
- Heavy-duty Steel Shell
- Internal Corrosion Protection (NEMA 4X Models)
- Low Temperature Control Thermostat*
- NEMA 4 or 4X Rating Maintained (UL50)
- Phase Sequence/Phase Loss Detector/ Under Voltage Monitor
- Stainless Steel Shell (NEMA 4X Models)
- UL/CUL Listed

* Transitioning to programmable controls

Accessories & Options

- Compressor Short Cycle Protector
- Enclosure Heater
- Filter Recoating Adhesive
- Lead-Lag Controller
- Remote Thermostat Relay
- Replacement Filters (P/N: 8001F)
- Special Paint Finishes
- Temperature Alarm

NEMA TYPE 4 OR 4X MAINTAINED

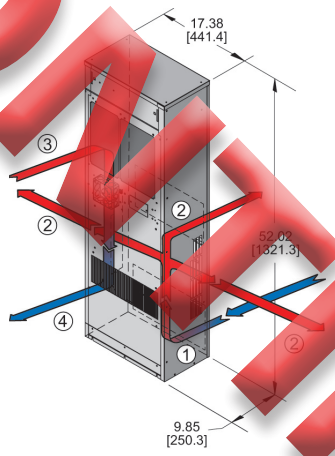

Performance

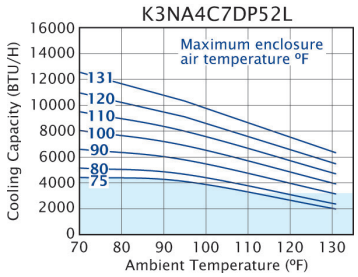

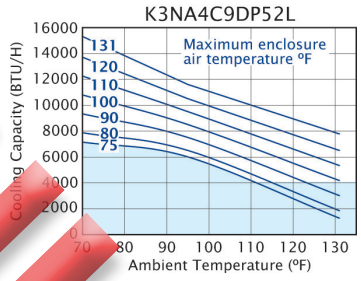

Operation within shaded area not recommended.

Drawings

a Condenser air inlet (ambient air in)
b Condenser outlet (warm ambient air out)
c Warm air return from enclosure
d Cool air outlet to enclosure

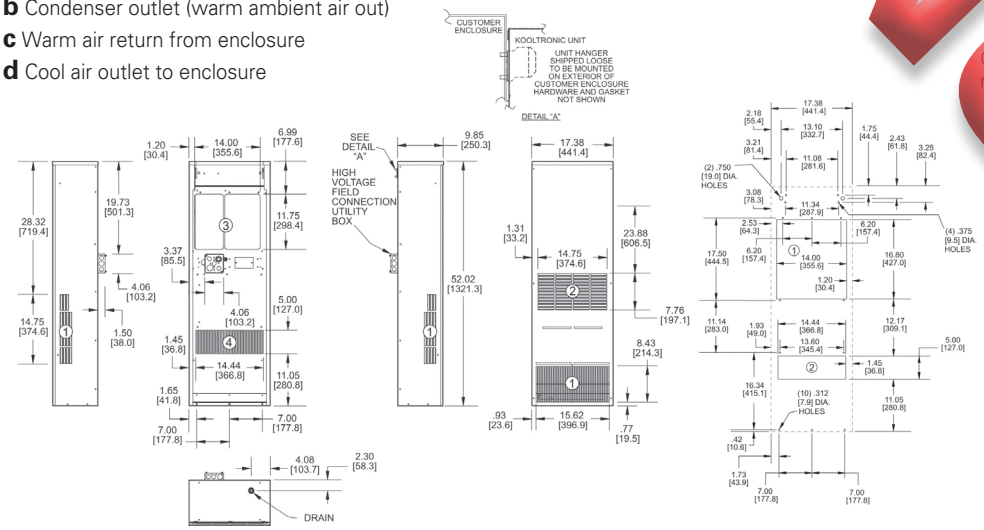

Notes: Data subject to change without notice.
Consult factory for special requirements. Dimensions are in inches. Millimeters shown in [ ] are for reference only.

DISCONTINUED

SlimKool Series (narrow width) SP28 NEMA 4 or 4X Air Conditioners

Model	NEMA Rating	BTU/H Capacity	95/95 Rating BTU/H	Ambient Temp. °F Max.	Ambient Temp. °F Min.	Ambient Temp. °C Max.	Ambient Temp. °C Min.	Volts	Hz	* Running Amps	Weight lbs	Weight kg
KNA4C4SP28L	4	4000	3700	131	-20	55	-29	115/100	60/50	8.3	85	38.5
KNA4C4SP28LV	4X	4000	3700	131	-20	55	-29	115/100	60/50	8.3	85	38.5

* Rating shown for operation at maximum ambient temperature.

NEMA TYPE 12, 3R, & 4 MAINTAINED (4X OPTIONAL)

Standard Features

- Built-In Condensate Evaporator
- CFC - Free Refrigerant
- Closed-Loop Cooling
- Compact Design/Slim Mounting Footprints
- Compressor Short Cycle Protector
- Condenser Impeller Cycling Controller
- Epoxy-Coated Evaporator & Condenser Coils
- Filter
- Heavy-duty Steel Shell with ANSI Gray Polyester Powder Coating
- Internal Corrosion Protection
- NEMA 12, 3R, and 4 Ratings Maintained (UL50) (4X Optional)
- Programmable Temperature Alarm
- Programmable Thermostat
- Stainless Steel Shell (NEMA 4X Models)
- UL/CUL Listed

Accessories & Options

- Enclosure Heater
- Filter Recoating Adhesive
- Lead-Lag Controller
- Mounting Adapter Plates
- Remote Monitoring
- Remote Thermostat Relay
- Replacement Filters (P/N: 9501F)
- Available in 230V and 480V Models

Performance

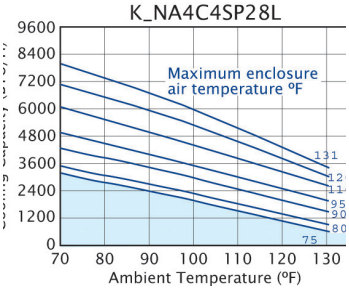

Operation within shaded area not recommended.

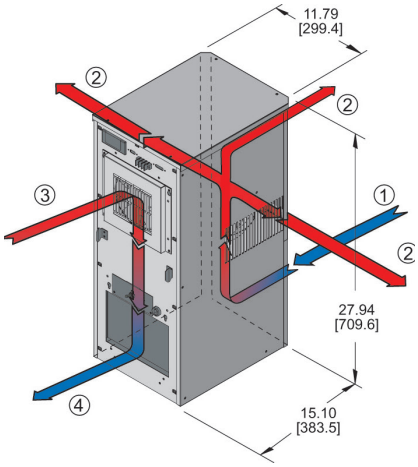

Drawings

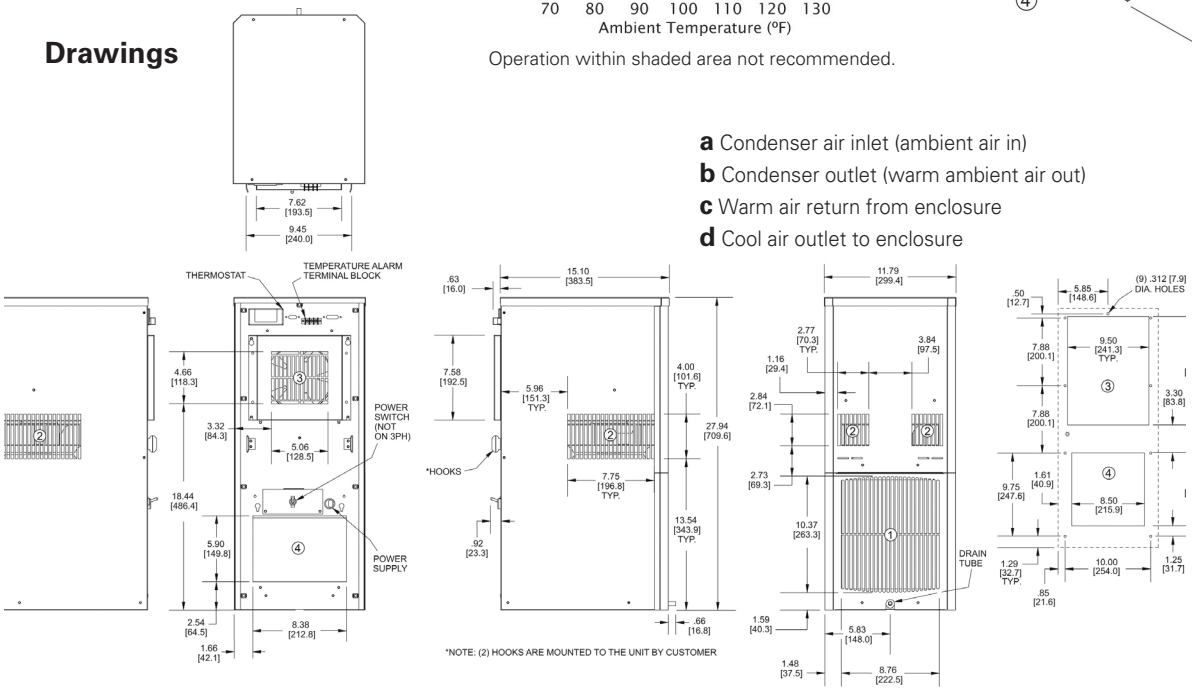

a Condenser air inlet (ambient air in)
b Condenser outlet (warm ambient air out)
c Warm air return from enclosure
d Cool air outlet to enclosure

Notes: Data subject to change without notice.
Consult factory for special requirements. Dimensions are in inches. Millimeters shown in [ ] are for reference only.

SlimKool Series (narrow width) SP36 NEMA 4 or 4X Air Conditioners

Model	NEMA Rating	BTU/H Capacity	95/95 Rating BTU/H	Ambient Temp. °F Max.	Ambient Temp. °F Min.	Ambient Temp. °C Max.	Ambient Temp. °C Min.	Volts	Hz	* Running Amps	Weight lbs	Weight kg
KNA4C6SP36L	4	6000	5600	131	-20	55	-29	115/100	60/50	9.6	100	45.3
KNA4C6SP36LV	4X	6000	5600	131	-20	55	-29	115/100	60/50	9.6	100	45.3
KNA4C8SP36L	4	8000	7500	131	-20	55	-29	115/100	60/50	14.4	100	45.3
KNA4C8SP36LV	4X	8000	7500	131	-20	55	-29	115/100	60/50	14.4	100	45.3

* Rating shown for operation at maximum ambient temperature.

Standard Features

- Built-In Condensate Evaporator
- CFC - Free Refrigerant
- Closed-Loop Cooling
- Compact Design/Slim Mounting Footprints
- Compressor Short Cycle Protector
- Condenser Impeller Cycling Controller
- Epoxy-Coated Evaporator & Condenser Coils
- Filter
- Heavy-duty Steel Shell with ANSI Gray Polyester Powder Coating
- Internal Corrosion Protection
- NEMA 12, 3R, and 4 Ratings Maintained (UL50) (4X Optional)
- Programmable Temperature Alarm
- Programmable Thermostat
- Stainless Steel Shell (NEMA 4X Models)
- UL/CUL Listed

Accessories & Options

- Enclosure Heater
- Filter Recoating Adhesive
- Lead-Lag Controller
- Mounting Adapter Plates
- Remote Monitoring
- Remote Thermostat Relay
- Replacement Filters (P/N: 9502F)
- Available in 230V Models

NEMA
TYPE 12, 3R, & 4
MAINTAINED
(4X OPTIONAL)

Performance

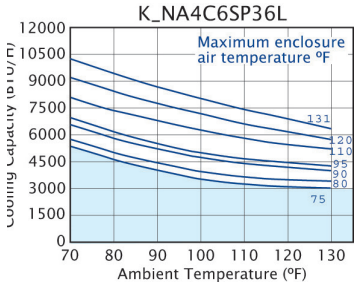

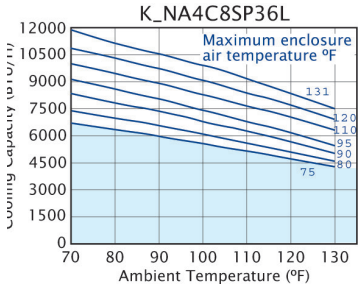

Operation within shaded area not recommended.

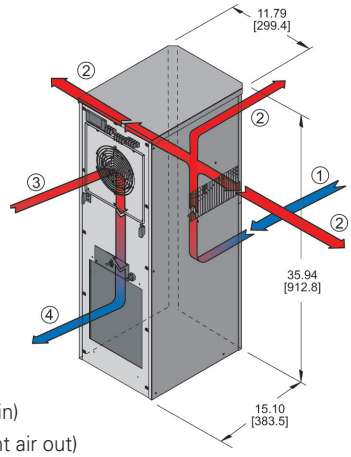

Drawings

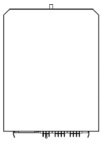

a Condenser air inlet (ambient air in)
b Condenser outlet (warm ambient air out)
c Warm air return from enclosure
d Cool air outlet to enclosure

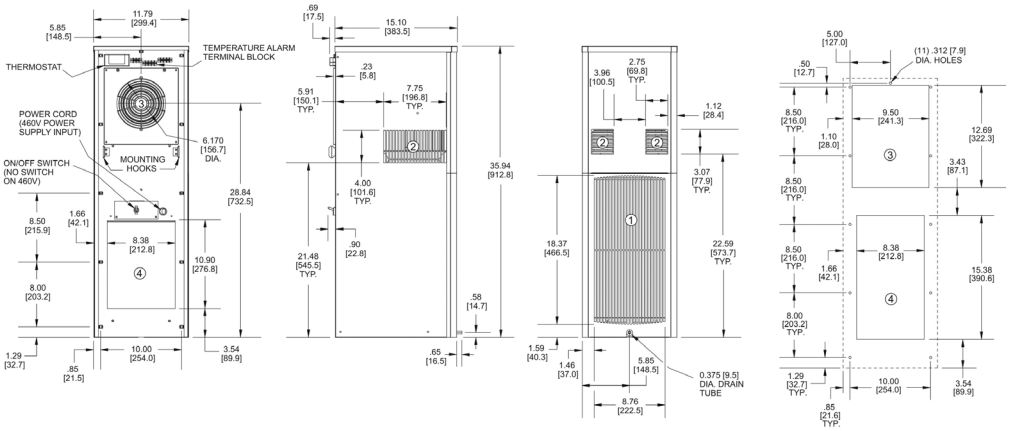

Notes: Data subject to change without notice.
Consult factory for special requirements. Dimensions are in inches. Millimeters shown in [ ] are for reference only.

SlimKool Series (narrow width) SP43 NEMA 4 or 4X Air Conditioners

Model	NEMA Rating	BTU/H Capacity	95/95 Rating BTU/H	Ambient Temp. °F Max.	Ambient Temp. °F Min.	Ambient Temp. °C Max.	Ambient Temp. °C Min.	Volts	Hz	* Running Amps	Weight lbs	Weight kg
KNA4C11SP43L	4	11000	9300	131	-20	55	-29	115/100	60/50	20.0/19.5	115	52
KNA4C11SP43LV	4X	11000	9300	131	-20	55	-29	115/100	60/50	20.0/19.5	115	52

* Rating shown for operation at maximum ambient temperature.

Standard Features

- Built-In Condensate Evaporator
- CFC - Free Refrigerant
- Closed-Loop Cooling
- Compact Design/Slim Mounting Footprints
- Compressor Short Cycle Protector
- Condenser Impeller Cycling Controller
- Epoxy-Coated Evaporator & Condenser Coils
- Filter
- Heavy-duty Steel Shell with ANSI Gray Polyester Powder Coating
- Internal Corrosion Protection
- NEMA 12, 3R, and 4 Ratings Maintained (UL50) (4X Optional)
- Programmable Temperature Alarm
- Programmable Thermostat
- Stainless Steel Shell (NEMA 4X Models)
- UL/CUL Listed

Accessories & Options

- Enclosure Heater
- Filter Recoating Adhesive
- Lead-Lag Controller
- Mounting Adapter Plates
- Remote Monitoring
- Remote Thermostat Relay
- Replacement Filters (P/N: 9503F)
- Available in 230V and 480V Models

NEMA
TYPE 12, 3R, & 4 MAINTAINED (4X OPTIONAL)

Performance

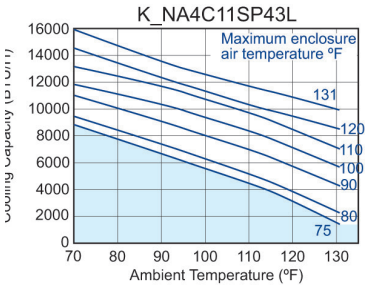

Operation within shaded area not recommended.

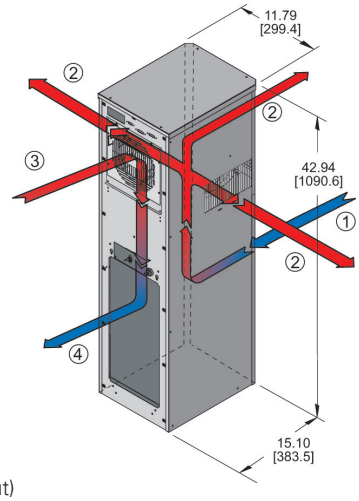

Drawings

a Condenser air inlet (ambient air in)
b Condenser outlet (warm ambient air out)
c Warm air return from enclosure
d Cool air outlet to enclosure

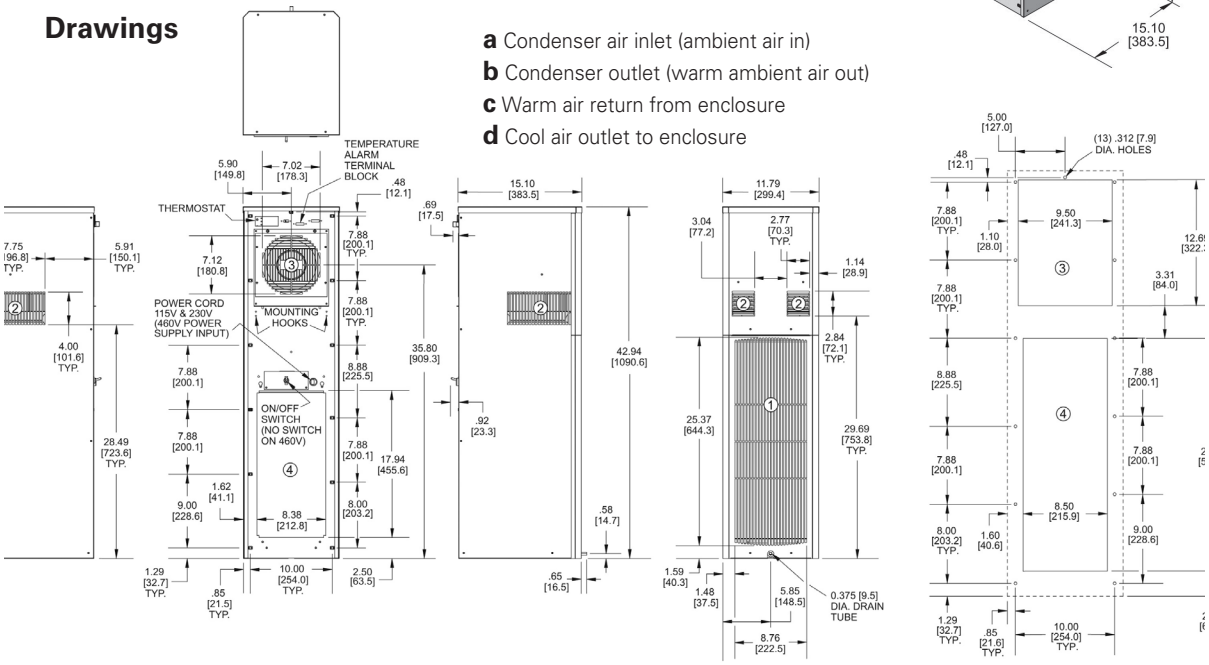

Notes: Data subject to change without notice.
Consult factory for special requirements. Dimensions are in inches. Millimeters shown in [ ] are for reference only.

Compact Series Horizontal Top-Mounted Air Conditioners

Model	BTU/H Capacity	95/95 Rating BTU/H	Ambient Temp. °F Max.	Ambient Temp. °F Min.	Ambient Temp. °C Max.	Ambient Temp. °C Min.	Volts	Hz	* Running Amps	Weight lbs	Weight kg
KA4C4HTL	4000	2250	125	50	52	10	115/100	60/50	13.1	85	38

* Rating shown for operation at maximum ambient temperature.

Standard Features

- Built-In Condensate Evaporator
- CFC - Free Refrigerant
- Filter
- Low Temperature Control Thermostat
- UL/CUL Listed

Accessories & Options

- Compressor Short Cycle Protector
- Enclosure Heater
- Filter Recoating Adhesive
- Internal Corrosion Protection
- Lead-Lag Controller
- Lifting Eyes
- Low Airflow Detector
- Low Ambient Kit
- Remote Thermostat Relay
- Replacement Filters (P/N: 240F)
- Special Controls or Indicators
- Special Materials or Finishes
- Special Motors, Line Cords, or Connectors
- Stainless or Aluminum Shell
- Temperature Alarm
- Available in 230V Models

Performance

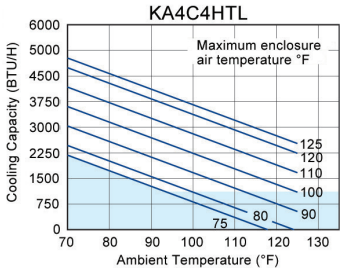

Operation within shaded area not recommended.

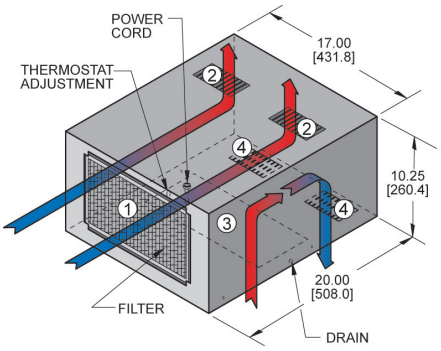

Drawings

a Condenser air inlet (ambient air in)
b Condenser outlet (warm ambient air out)
c Warm air return from enclosure
d Cool air outlet to enclosure

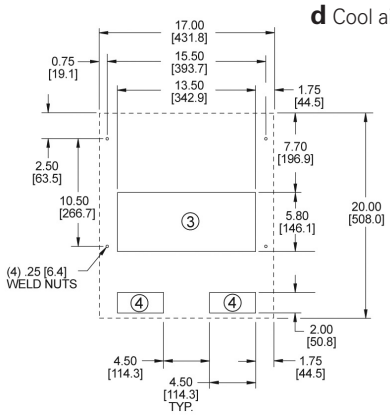

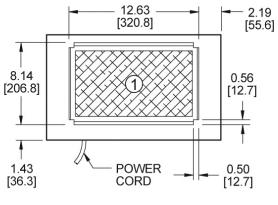

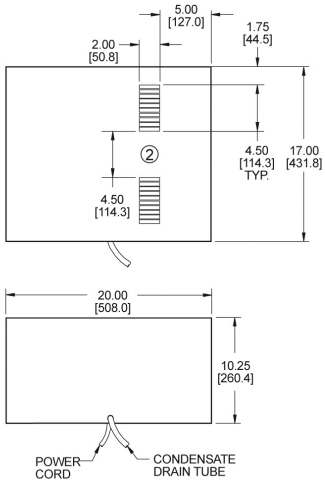

Notes: Data subject to change without notice.
Consult factory for special requirements. Dimensions are in inches. Millimeters shown in [ ] are for reference only.

Compact Plus Series Horizontal Top-Mounted Air Conditioners

Model	BTU/H Capacity	95/95 Rating BTU/H	Ambient Temp. °F Max.	Ambient Temp. °F Min.	Ambient Temp. °C Max.	Ambient Temp. °C Min.	Volts	Hz	* Running Amps	Weight lbs	Weight kg
KA4C5.0H5R	5000	3500	125	50	52	10	115/100	60/50	16.5	95	43

* Rating shown for operation at maximum ambient temperature.

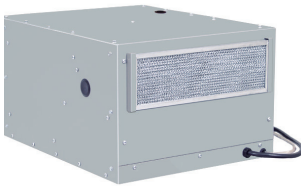

Standard Features

- CFC - Free Refrigerant
- Filter
- Low Temperature Control Thermostat
- Reversible Condenser Outlet Blower
- UL Recognized

Accessories & Options

- Compressor Short Cycle Protector
- Brackets for Rack Mounting
- Enclosure Heater
- Filter Recoating Adhesive
- Internal Corrosion Protection
- Lead-Lag Controller
- Lifting Eyes
- Low Airflow Detector
- Low Ambient Kit
- Remote Thermostat Relay
- Replacement Filters (P/N: 4811F)
- Special Controls or Indicators
- Special Materials or Finishes
- Special Motors, Line Cords, or Connectors
- Stainless or Aluminum Shell
- Temperature Alarm
- Available in 230V Models

Recognized

Performance

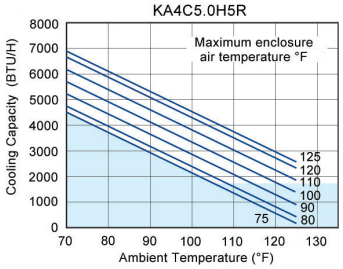

Operation within shaded area not recommended.

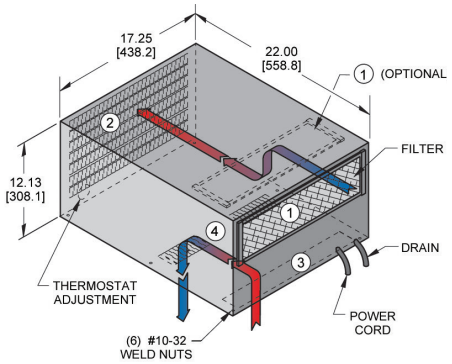

Drawings

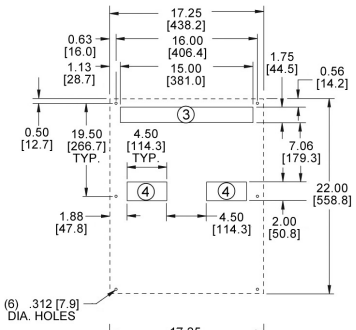

a Condenser air inlet (ambient air in)
b Condenser outlet (warm ambient air out)
c Warm air return from enclosure
d Cool air outlet to enclosure

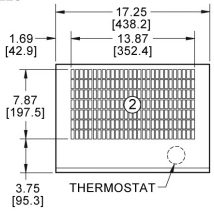

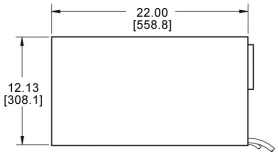

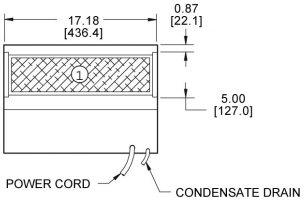

Notes: Data subject to change without notice.
Consult factory for special requirements. Dimensions are in inches. Millimeters shown in [ ] are for reference only.

Filter Fans
NEMA 1 Box Fan

Description

High airflow with low noise operations makes these versatile packaged fans very popular in a wide range of applications. Reversible mounting brackets allow user to push or pull air through the enclosure. In addition, these fans can be installed internally or externally, vertically or horizontally, with or without a filter. Utilizing the special motor-mount isolation system, these fans operate virtually vibration-free. Front and rear grilles can be adjusted to accommodate or omit filter. Filter slides in and out easily for cleaning and replacement.

Features

- Exceptionally Quiet
- Versatile Mounting and Adaptability
- Heavy-Gauge Steel Construction
- UL/CSA Ball-Bearing Motors
- Attractive Stainless Steel Grilles
- All models Can Pressurize or Exhaust
- Accessories and Options

Accessories

All Packaged Fans

- Filter Recoating Adhesive
- Replacement Filters (531F for KP40, 681F for KP60, 1081F for KP100)
- Special Materials or External finishes
- Special Motors, Line Cords or Connectors
- Variable Speed Control
- Adapters
- Grille Assemblies (KFG40, KFG60, KFG100) Includes Filter

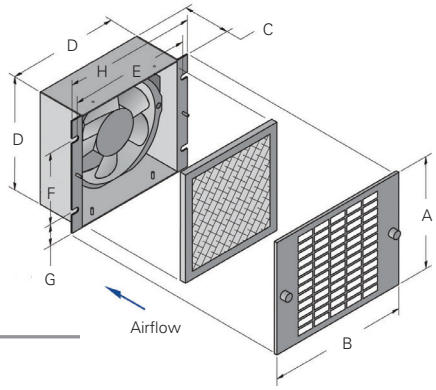

Technical Data

Catalog Number	CFM@ 0-inches	RPM nominal	Running Amps Run.	Running Amps L.P.	Watts	Volts	Weight Lbs	Weight kg
KP40	105	3000	0.18	0.33	15	115†	3.0	1.36
KP60	220	3300	0.29	0.35	33	115†	4.0	1.81
KP100	550	1600	0.49	1.30	60	115†	10.0	4.53

Dimensions Inches (mm)

Catalog Number	A in	A mm	B in	B mm	C in	C mm	D in	D mm	E in	E mm	F in	F mm	G in	G mm	H in	H mm
KP40	6.13	156	7.38	187	2.37	60	5.62	143	6.37	162	4.12	04	.75	19	7.00	178
KP60	7.63	194	8.87	225	3.00	76	7.12	181	7.87	200	4.50	114	1.31	33	8.50	216
KP100	11.63	295	13.00	330	4.56	116	11.12	282	11.87	310	6.87	174	2.12	54	12.50	317

† For 230 volt models add a "2" after the "K" in the catalog number.

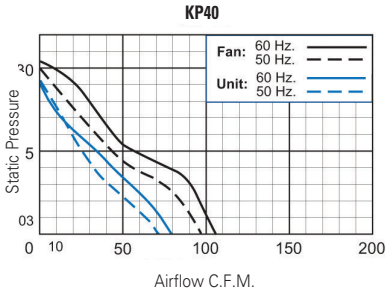

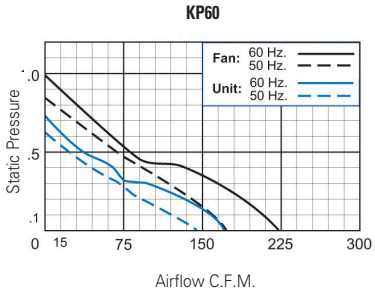

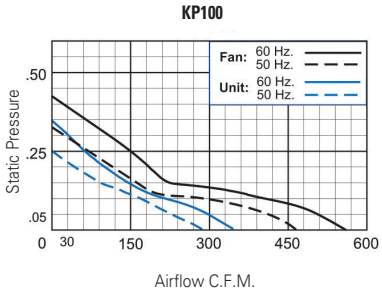

Additional Specifications

Permanent Filter: Furnished with each packaged fan.

Grille/Guard: KP40, KP60 and KP100 each include a rear guard and an attractive stainless steel grille and knurled captive fasteners for easy removal. Grilles and guards comply with OSHA and UL safety standards.

Notes: Data subject to change without notice.
Consult factory for special requirements. Dimensions are in inches. Millimeters shown in [ ] are for reference only.

Advantage Sentry Series NEMA 3R Filter Fans KNP100F

Model	Voltage	Frequency Hz	Input mA	Input Watts	Fan Airflow CFM*	Fan w/Grille Airflow CFM**	Noise db(A)	Operating Temp. °F Min.	Operating Temp. °F Max.	Operating Temp. °C Min.	Operating Temp. °C Max.	Approx. Weight lbs	Approx. Weight kg
BLKNP100F	115 VAC	50/60	.35/.38	36/38	338/405	141/172	55/58	-40	158	-40	70	12.5	5.6

* Fan airflow without filter or grille.
** NEMA Rated if installed with provided filter.

Standard Features

- Baked Powder Finish
- Integrated Fan Guards
- Integrated Sealing Gasket
- Most Assemblies are UL/cUL Listed
- NEMA 3R Rating Maintained (if used with provided filter)
- Secure Mounting
- UL/CSA Shielded Ball Bearing Motor
- Washable, Reuseable Filter

Accessories & Options

- Grille Assembly (P/N: KNPA100F)
- IP54 & IP55 Filter Protection Available
- Other Voltages, Both AC & DC
- Replacement Filters (P/N: 1081F)
- Available with Reversed Airflow Direction

NEMA TYPE 3R MAINTAINED

Performance

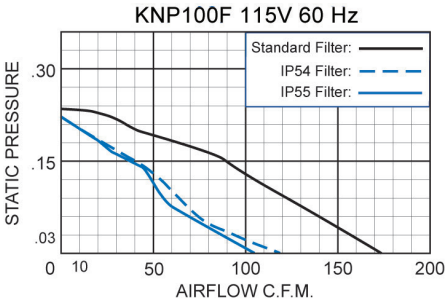

Drawings

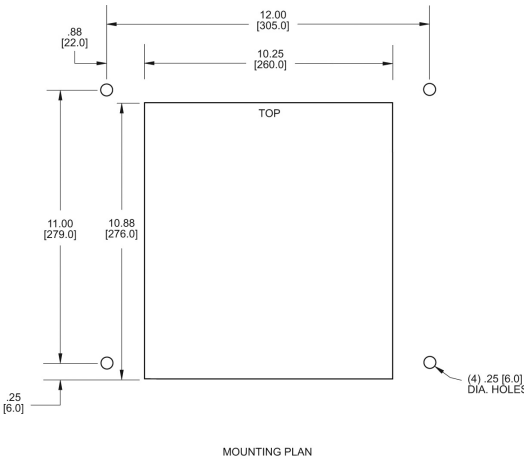

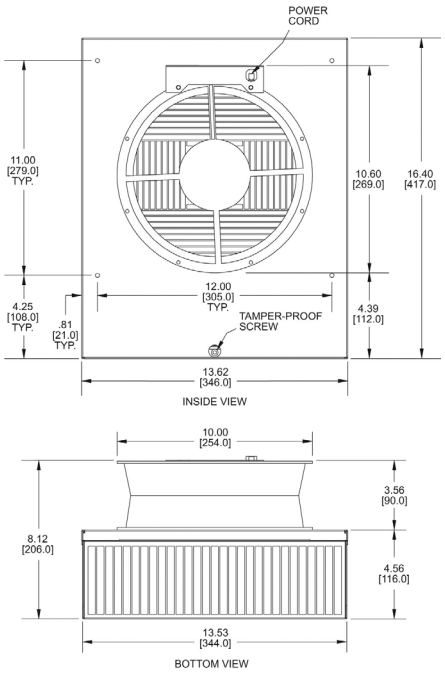

Notes: Data subject to change without notice.
Consult factory for special requirements. Dimensions are in inches. Millimeters shown in [ ] are for reference only.

Advantage Sentry Series
Filter Fans Filter-Grille Assemblies

Model
BLKNPA100F

Description

These Filter-Grille Assemblies can be used in conjunction with the Advantage Sentry Series Filter Fans for enclosure cooling. In a typical mounting orientation the motorized Filter Fan pulls air into an enclosure while the Filter-Grille Assembly functions as an outlet. Alternatively, if the reverse airflow option is chosen for the filter fan, the fan exhausts the enclosure and the Filter-Grille Assembly functions as an intake. These Filter-Grille Assemblies feature filters that are easily removed for cleaning or replacement.

Standard Features

- Integrated Sealing Gasket
- Surface Mounting
- Baked Powder Finish
- Washable, Reuseable Filter

Accessories & Options

- Replacement Filter (P/N: 1081F)

Drawings

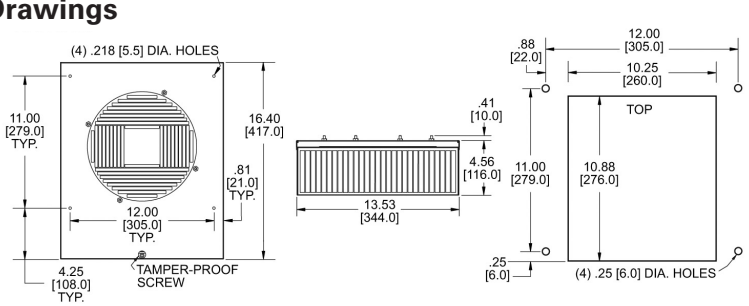

Typical Mounting Orientations

Blue arrows show direction of airflow. Boxes represent side view of electronics/electrical enclosure.

Typical Mounting Orientations

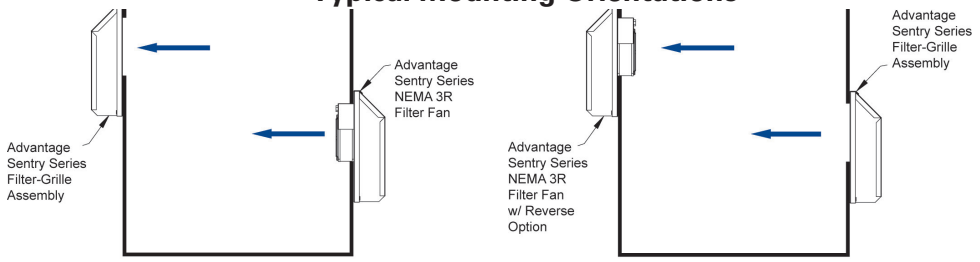

(Left) Filter Fan pressurizes cabinet. Filter-Grille Assembly exhausts cabinet.

(Right) Filter Fan with reverse option chosen.

Notes: Data subject to change without notice.
Consult factory for special requirements. Dimensions are in inches. Millimeters shown in [ ] are for reference only.

Guardian Series
NEMA 4 or 4X Filter Fans

Model	NEMA Rating	Voltage	Frequency Hz	Input mA	Input Watts	Fan Airflow CFM*	Fan w/Grille Airflow CFM**	Noise db(A)	Operating Temp. °F Min.	°F Max.	°C Min.	°C Max.	Approx. Weight lbs	kg
BLKNP40FL	4	115 VAC	50/60	.22/.19	14/13	90/106	40/45	52/55	-40	158	-40	70	10	4.5
BLKNP40FLV	4X	115 VAC	50/60	.22/.19	14/13	90/106	40/45	52/55	-40	158	-40	70	10	4.5

* Fan airflow without filter or grille.
** NEMA Rated if installed with provided filter.

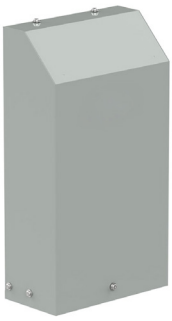

For general ventilating use only. Do not use these fans to exhaust hazardous or explosive material or vapors. NOT ALL SYSTEMS ARE SUITABLE FOR UTILIZING OUTSIDE AIR. To protect sensitive components against condensation an enclosure heater or closed-loop cooling is recommended. To protect sensitive components against corrosive elements closed-loop cooling is recommended.

Standard Features

- Baked Powder Finish
- Integrated Fan Guards
- Integrated Sealing Gasket
- IP55 Filter Protection
- Most Assemblies are UL/ cUL Approved
- NEMA 4 or 4X Rating Maintained (if used with provided filter)
- Secure Mounting
- Stainless Steel Shell (NEMA 4X Models)
- UL/CSA Shielded Ball Bearing Motors
- Washable, Reuseable Filter

Accessories & Options

- Filter-Hood Assembly (Recommended) (P/N: BLKNPA60FL, BLKNPA60FLV)
- Other Voltages, Both AC & DC
- Replacement Filters (P/N: 0429-01-01)
- Available with Reversed Airflow Direction

NEMA
TYPE 4 or 4X
MAINTAINED

Performance

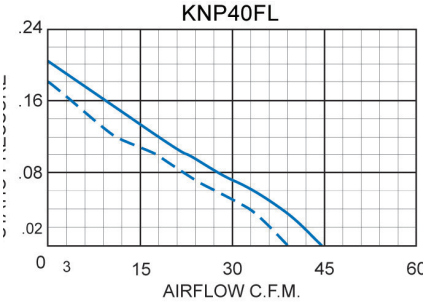

Airflow vs. static pressure curves are shown for 60 HZ and 50 HZ (broken line) inputs.

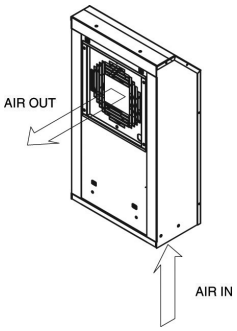

Drawings

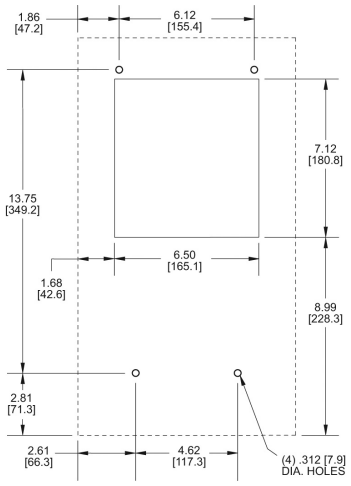

Mounting Plan

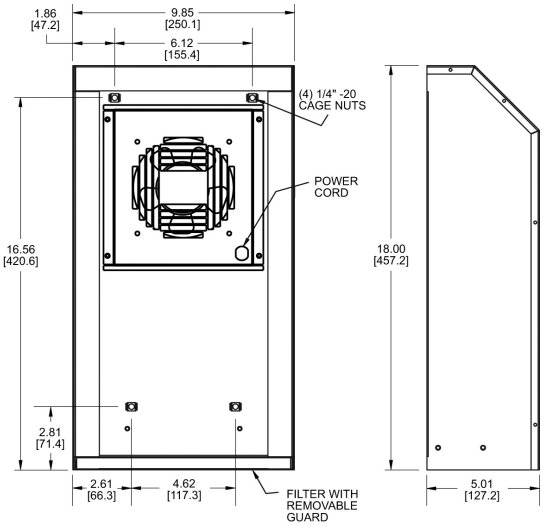

Notes: Data subject to change without notice.
Consult factory for special requirements. Dimensions are in inches. Millimeters shown in [ ] are for reference only.

Guardian Series
NEMA 4 or 4X Filter Fans

Model	NEMA Rating	Voltage	Frequency Hz	Input mA	Input Watts	Fan Airflow CFM*	Fan w/Grille Airflow CFM**	Noise db(A)	Operating Temp. °F Min.	°F Max.	°C Min.	°C Max.	Approx. Weight lbs	kg
BLKNP60FL	4	115 VAC	50/60	.42/.34	43/37	270/290	84/92	59/61	-40	158	-40	70	11.3	5.1
BLKNP60FLV	4X	115 VAC	50/60	.42/.34	43/37	270/390	84/92	59/61	-40	158	-40	70	11.3	5.1

* Fan airflow without filter or grille.
** NEMA Rated if installed with provided filter.

For general ventilating use only. Do not use these fans to exhaust hazardous or explosive material or vapors. NOT ALL SYSTEMS ARE SUITABLE FOR UTILIZING OUTSIDE AIR. To protect sensitive components against condensation an enclosure heater or closed-loop cooling is recommended. To protect sensitive components against corrosive elements closed-loop cooling is recommended.

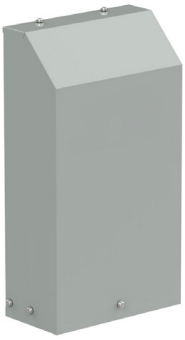

Standard Features

- Baked Powder Finish
- Integrated Fan Guards
- Integrated Sealing Gasket
- IP55 Filter Protection
- Most Assemblies are UL/ cUL Approved
- NEMA 4 or 4X Rating Maintained (if used with provided filter)
- Secure Mounting
- Stainless Steel Shell (NEMA 4X Models)
- UL/CSA Shielded Ball Bearing Motors
- Washable, Reuseable Filter

Accessories & Options

- Filter-Hood Assembly (Recommended) (P/N: BLKNPA60FL, BLKNPA60FLV)
- Other Voltages, both AC & DC
- Replacement Filters (P/N: 0429-01-01)
- Available with Reversed Airflow Direction

NEMA TYPE 4 or 4X MAINTAINED

Performance

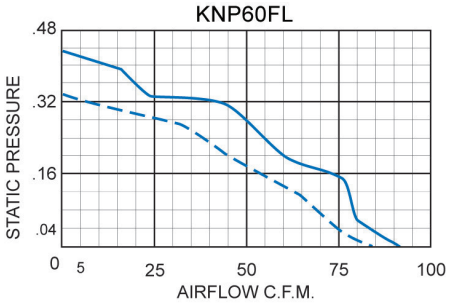

Airflow vs. static pressure curves are shown for 60 HZ and 50 HZ (broken line) inputs.

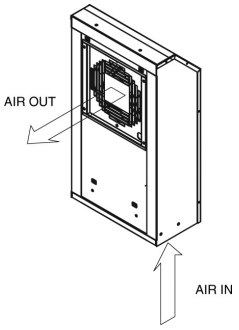

Drawings

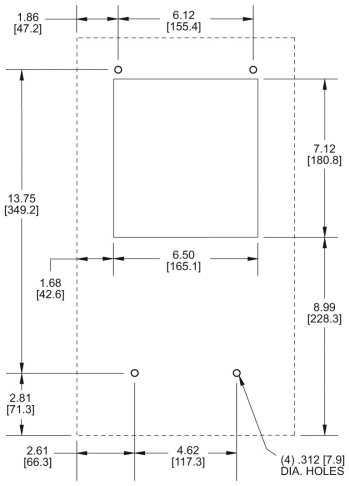

Mounting Plan

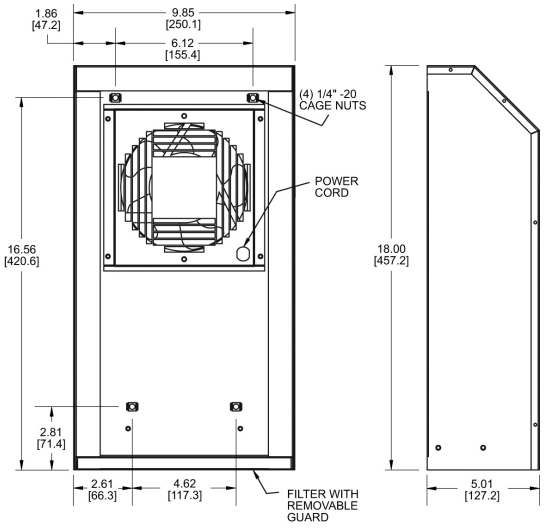

Notes: Data subject to change without notice.
Consult factory for special requirements. Dimensions are in inches. Millimeters shown in [ ] are for reference only.

Guardian Series
Filter Fans Filter-Hood Assemblies

Model	NEMA Rating
BLKNPA60FL	4
BLKNPA60FLV	4X

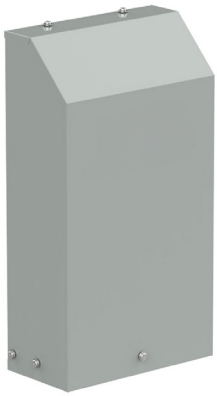

Description

These Filter-Hood Assemblies can be used in conjunction with the Guardian Series Filter Fans for enclosure cooling. In a typical mounting orientation the motorized Filter Fan pulls air into an enclosure while the Filter-Hood Assembly functions as an outlet. Alternatively, if the reverse airflow option is chosen for the filter fan, the fan exhausts the enclosure and the Filter-Hood Assembly functions as an intake. These Filter-Hood Assemblies feature filters that are easily removed for cleaning or replacement.

Standard Features

- Filter
- Integrated Sealing Gasket
- IP55 Filter Protection
- NEMA 4 or 4X Rating Maintained (if used with provided filter)
- Secure Mounting
- Stainless Steel Shell (NEMA 4X Models)
- Baked Powder Finish
- Washable, Reuseable Filter

Accessories & Options

- Replacement Filters (P/N: 0429-01-01)

Drawings

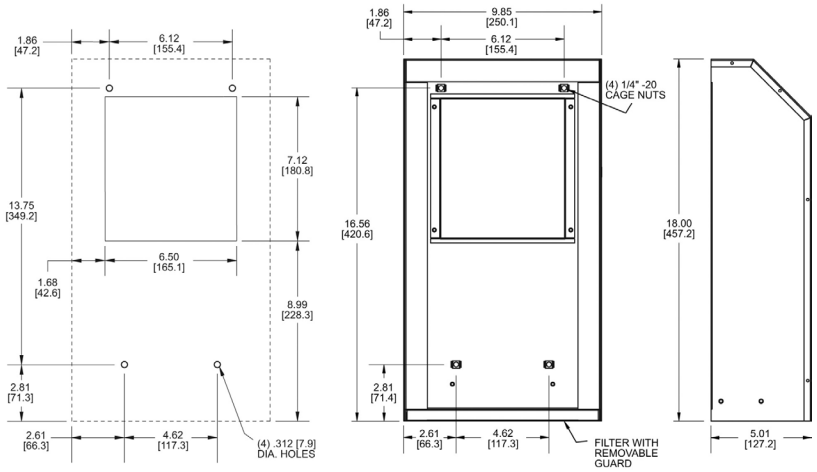

Typical Mounting Orientations

Blue arrows show direction of airflow. Boxes represent side view of electronics/electrical enclosure.

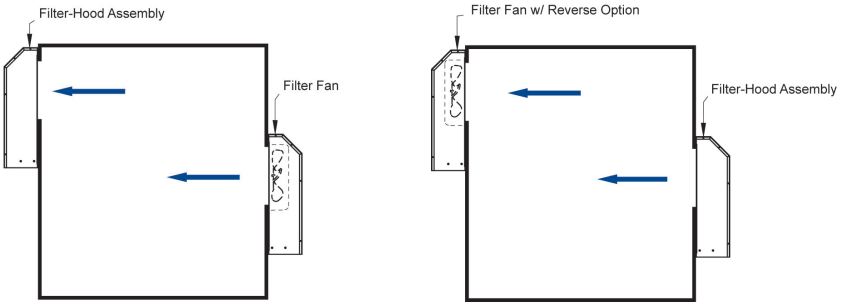

(Left) Filter Fan pressurizes cabinet.
Filter-Hood Assembly exhausts cabinet.

(Right) Filter Fan with reverse option chosen.

Notes: Data subject to change without notice.
Consult factory for special requirements. Dimensions are in inches. Millimeters shown in [ ] are for reference only.

NEMA 12 Filter Fans

Applications

- Industrial and Process Automation
- Packaging and Logistical Systems
- Energy (Solar, Wind, Water and Petrochemical)
- Telecommunications
- Defense Systems

Standards

- UL Recognized
- CSA Listed
- IP54 Rated
- IP55 Capable with Optional Filter
- Type 12

Product Options

- 5 Different Size Footprints for Flexibility
- CFM Range of 21 CFM - 585 CFM
- Voltage : 115VAC *
- Operating Temperature: 14°F (-10°C) to 140°F (60°C)
- All Models UV Resistant ABS blend; RAL 7035
- MTBF of 50,000 Hours
- All Units Functionally Tested Before Shipment

* 230VAC, 460VAC, 12VDC, 24VDC, 48VDC are also available in most model numbers

Construction

- Snap in mounting that does not require hardware
- Simple adjustment of airflow reversal; push/pull
- Retention clips designed to accept wide range of enclosures
- Hinged cover design for easy filter replacement
- Spring loaded terminal blocks for reliable electrical connection
- Gasketing and user manuals provided

Accessories

- Grills
- Replacement filters

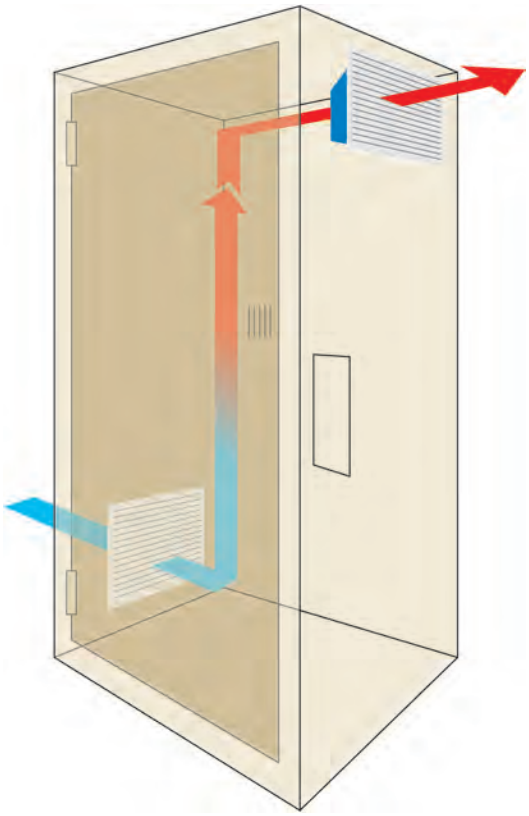

Illustration shows reverse/pull set-up. Standard ambient set-up will push cooler outside air into the enclosure.

Notes: Data subject to change without notice.
Consult factory for special requirements. Dimensions are in inches. Millimeters shown in ( ) are for reference only.

NEMA 12 Filter Fans

Model	CFM w/ Equiv. Exhaust Grill	CFM	Rating	Description
BLGSV1000203	14	21	NEMA 12	4 1/2" Filter Fan 115VAC
BLGSV1500203	29	39	NEMA 12	6" Filter Fan 115VAC
BLGSV2000203	44	64	NEMA 12	8" Filter Fan 115VAC
BLGSV2500203	77	112	NEMA 12	10" Filter Fan 115VAC
BLGSV2501203	129	159	NEMA 12	10" Filter Fan 115VAC
BLGSV3000203	224	295	NEMA 12	12 1/2" Filter Fan 115VAC
BLGSV3001203	353	412	NEMA 12	12 1/2" Filter Fan 115VAC Ambient
BLGSV3002203	338	850	NEMA 12	12 1/2" Filter Fan 115VAC Ambient

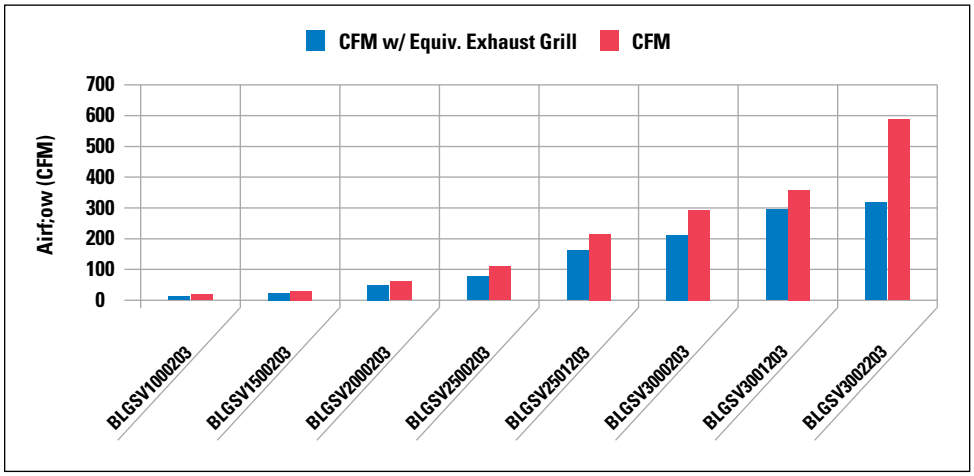

NEMA 12 Grills

Model	Rating	Description
BLGSF10	NEMA 12	4 1/2" Filter Grill
BLGSF15	NEMA 12	6" Filter Grill
BLGSF20	NEMA 12	8" Filter Grill
BLGSF25	NEMA 12	10" Filter Grill
BLGSF30	NEMA 12	12 1/2" Filter Grill

NEMA 12 Replacement Filters

Model	Rating	Description
BLAVAFAGS10	NEMA 12	4 1/2" Replacement Filter (packed 10)
BLAVAFAGS15	NEMA 12	6" Replacement Filter (packed 10)
BLAVAFAGS20	NEMA 12	8" Replacement Filter (packed 10)
BLAVAFAGS25	NEMA 12	10'" Replacement Filter (packed 10)
BLAVAFAGS30	NEMA 12	12 1/2" Replacement Filter (packed 10)

Notes: Data subject to change without notice.
Consult factory for special requirements. Dimensions are in inches. Millimeters shown in ( ) are for reference only.

NEMA 12 Filter Fans

Model	Description
BLGSV1000203	4 1/2" Filter Fan 115VAC

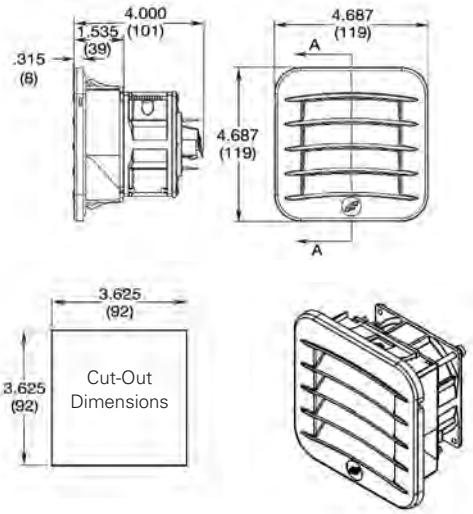

BLGSV1000203 - Performance Chart

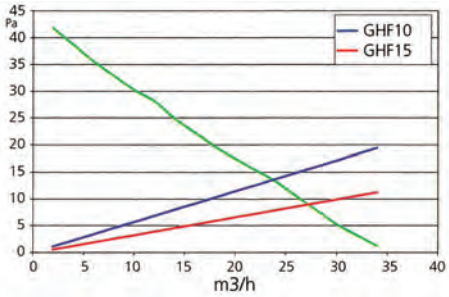

Model	Description
BLGSV1500203	6" Filter Fan 115VAC

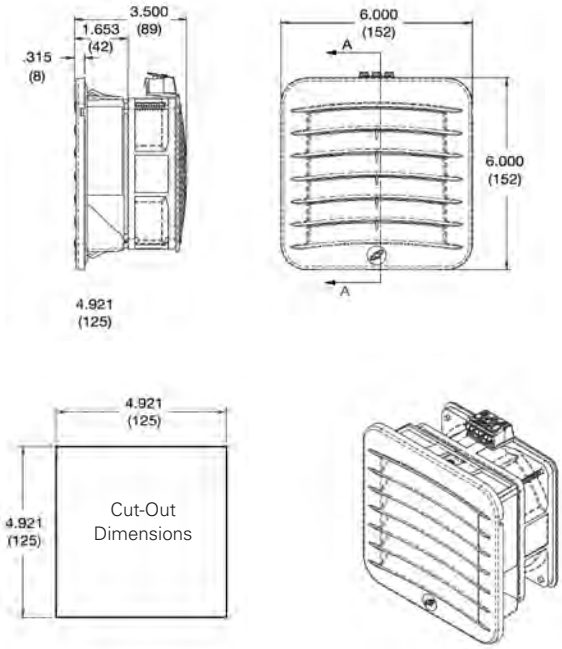

BLGSV1500203 - Performance Chart

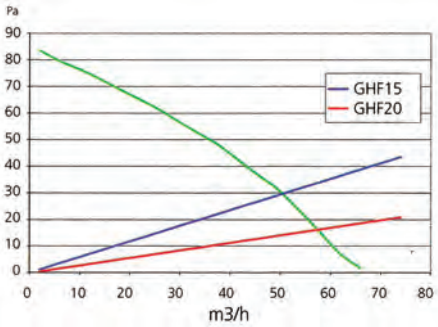

Notes: Data subject to change without notice.
Consult factory for special requirements. Dimensions are in inches. Millimeters shown in ( ) are for reference only.

NEMA 12 Filter Fans

Model	Description
BLGSV2000203	8" Filter Fan 115VAC

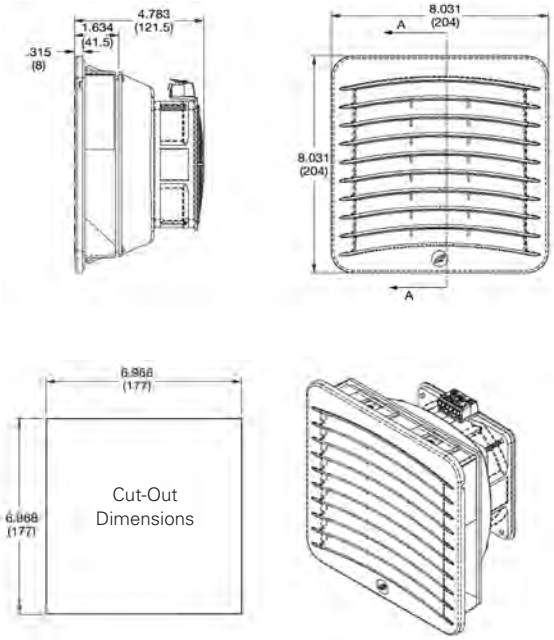

BLGSV2000203 - Performance Chart

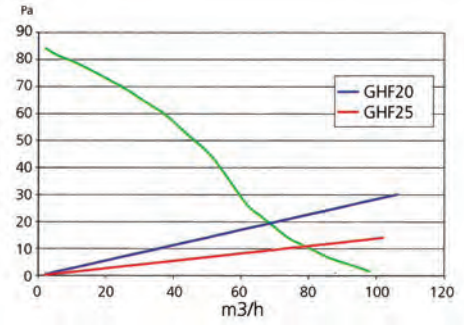

Model	Description
BLGSV2500203	10" Filter Fan 115VAC

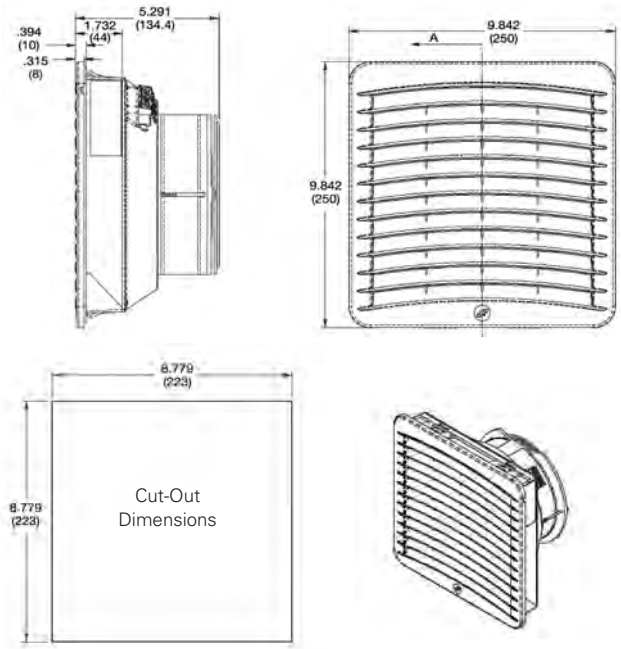

BLGSV2500203 - Performance Chart

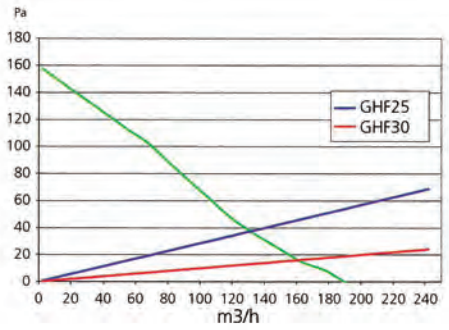

Notes: Data subject to change without notice.
Consult factory for special requirements. Dimensions are in inches. Millimeters shown in ( ) are for reference only.

NEMA 12 Filter Fans

Model	Description
BLGSV2501203	10" Filter Fan 115VAC

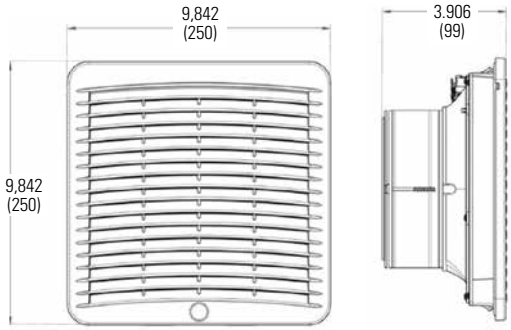

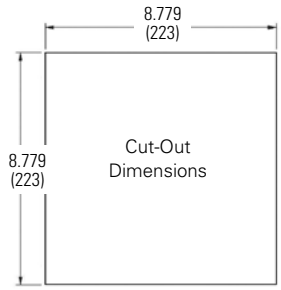

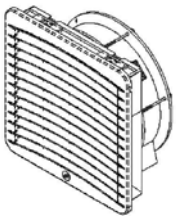

BLGSV2501203 - Performance Chart

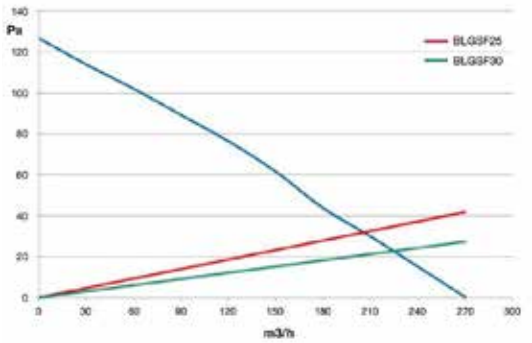

BLGSV3000203 - Performance Chart

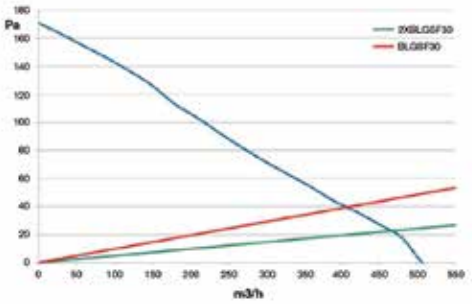

Model	Description
BLGSV3000203	12.5" Filter Fan 115VAC
BLGSV3001203	12.5" Filter Fan 115VAC Ambient
BLGSV3002203	12.5" Filter Fan 115VAC Ambient

BLGSV3000203 - 5.469 (139)
BLGSV3001203 - 5.312 (135)
BLGSV3002203 - 6.312 (161)

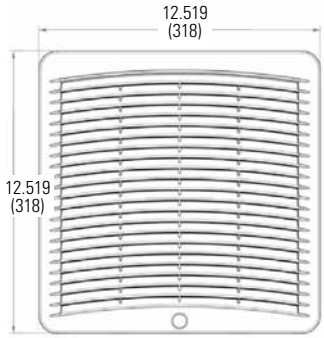

BLGSV3001203 - Performance Chart

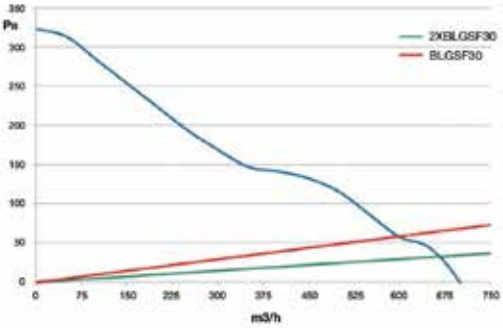

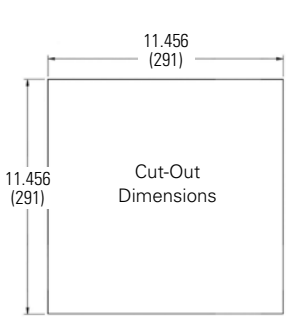

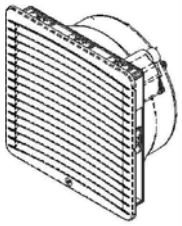

BLGSV3002203 - Performance Chart

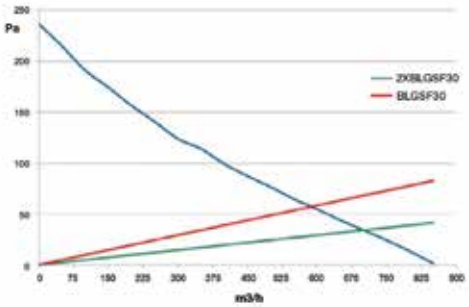

Notes: Data subject to change without notice.
Consult factory for special requirements. Dimensions are in inches. Millimeters shown in ( ) are for reference only.

Heater Calculation Sheet

Climate Control

Enclosure Heaters are used to maintain minimum operating temperatures and to help prevent failure of electronic components caused by condensation and corrosion.

Follow steps 1-5 to determine the heating requirement of an enclosure (US units - left column, metric - right column)

STEP 1: Determine Surface Area (A) exposed to open air

Enclosure Dimensions:	height = _____	feet	_____ meters
	width = _____	feet	_____ meters
	depth = _____	feet	_____ meters

Assuming a free-standing enclosure ⇒ A = 2 (Height x Width) + 2 (Height x Depth) + 2 (Width x Depth)

A = _____ ft² or **_____ m²**

STEP 2: Choose the Heat Transmission Coefficient (k) for your enclosure

painted steel =	0.511 W/(ft² • K) 5.5 W/(m² • K)
stainless steel =	0.344 W/(ft² • K) 3.7 W/(m² • K)
aluminum =	1.115 W/(ft² • K) 12 W/(m² • K)
plastic (or insulated stainless) =	0.325 W/(ft² • K) 3.5 W/(m² • K)

k = _____ W/(ft² • K) or **_____ W/(m² • K)**

STEP 3: Determine the Temperature Differential (ΔT)

Desired interior temperature =	_____ °F	_____ °C
Lowest ambient temperature =	_____ °F	_____ °C
Temperature differential =	_____ °F	_____ °C = K

⇓

Calculation requires ΔT to be in Kelvin (K)

Divide ΔT (°F) by 1.8 for **ΔT = _____ K** or **_____ K**

STEP 4: Determine Heating Power (P_V), if any

P_V = components in the enclosure which generates heat (i.e. transformers, power supplies, etc.)

P_V = _____ W or **_____ W**

STEP 5: Calculating the Required Heating Power (P_H)

If enclosure is located inside: **P_H = (A x k x ΔT) - P_V = _____ W**

If enclosure is located outside: **P_H = 2 x (A x k x ΔT) - P_V = W _____**

Notes: Data subject to change without notice.
Consult factory for special requirements. Dimensions are in inches. Millimeters shown in ( ) are for reference only.

Heaters
PTC Fan Heaters
Climate Control

Description

PTC fan heaters are designed to help prevent failure of electronic components caused by condensation, corrosion and low temperatures. Integrated thermostat stabilizes enclosure temperature, improves performance and extends the life of critical components. EFHT series fan heaters are designed for larger applications with high power requirements.

Features

- Compact fan heater in PTC technology
- PTC (Positive Temperature Coefficient) heating element
- Maintains minimum operating temperatures in enclosures
- Helps prevent failure of electronic components caused by condensation and corrosion
- Heating power adjusts to ambient temperature
- Integrated adjustable thermostat and control light
- 35 mm DIN rail mountable
- UL, VDE, and CE

Discount Schedule: C2

Subclass: TG0

Catalog Number	Voltage	Power	Max. current (inrush)	Axial Fan (ball bearing)	Thermostat range	Weight lbs	Weight kg
EFHT550F-120	110-120 VAC	550 W (60 Hz)	14 A	20 cfm (35 m³/h)	32-140°F	2	0.9
EFHT650F-120	110-120 VAC	650 W (60 Hz)	15 A	26 cfm (45 m³/h)	32-140°F	2.4	1.1

For spacing, add 2" clearance to heat sensitive parts.

Technical Data	
Heating element:	PTC-Semiconductor/resistor. Self regulating with changing ambient temperature (see graph below)
Overheat protection:	Temperature limitor in case of fan failure
Function control light:	LED
Housing:	Plastic, rated UL94V-0
Dimensions (HxWxD):	6.5x3.94x5" (165x100x128 mm)
Connection:	2 pole terminal, AWG 14, max. (2.5 mm²)
Mounting:	Clip for 35 mm DIN rail, EN 50022
Protection class:	II (double insulated)
Protection type:	IP20

Heating Power / Ambient Temperature at 60Hz

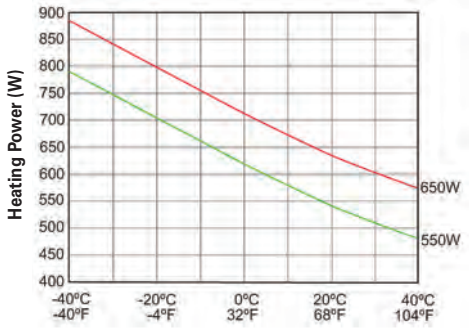

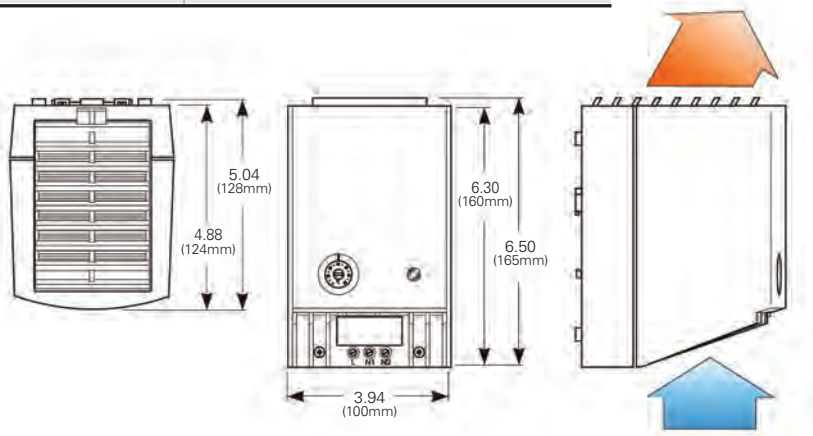

Notes: Data subject to change without notice.
Consult factory for special requirements. Dimensions are in inches. Millimeters shown in ( ) are for reference only.

Heaters
PTC Heater
Climate Control

Description

PTC heaters are designed to help prevent failure of electronic components caused by condensation, corrosion and low temperatures. EH15 series feature PTC technology and are designed for smaller enclosure applications with lower wattage requirements.

Features

- Compact heater in PTC technology
- PTC (Positive Temperature Coefficient) heating element
- Maintains minimum operating temperatures in enclosures
- Helps to prevent failure of electronic components caused by condensation and corrosion
- Push connectors for quick and easy wiring
- 35 mm DIN rail mountable
- UL, VDE, and CE

Discount Schedule: C2

Subclass: TG0

Pending

Catalog Number	Power[1]	Max. Current[2]	L		Weight	
			in.	mm	lbs	kg
EH15	15W	0.5A	2.6	65	0.66	0.3
EH30	30W	1.0A	2.6	65	0.66	0.3
EH45	45W	1.0A	2.6	65	0.66	0.3
EH60	60W	1.5A	5.5	140	1.10	0.5
EH75	75W	1.8A	5.5	140	1.10	0.5
EH100	100W	2.4A	5.5	140	1.10	0.5
EH150	150W	4.5A	8.7	220	1.76	0.8

[1] At 68°F (20°C) ambient temperature. [2] Inrush current

	Technical Data
Operating voltage:	AC/DC 110-250V
Heating element:	PTC resistor, self regulating
Heating body:	Anodized extruded aluminum
Protection class:	I, test voltage 1600V
Protection type:	IP20
Connection:	Push type terminals for stranded and rigid wire 3 x AWG 20-AWG 16 (0.5-2.5 mm²)
Mounting:	Clip for 35 mm DIN rail, EN 50022
Agency approvals:	UL, VDE

Easy wiring by using push-type terminals

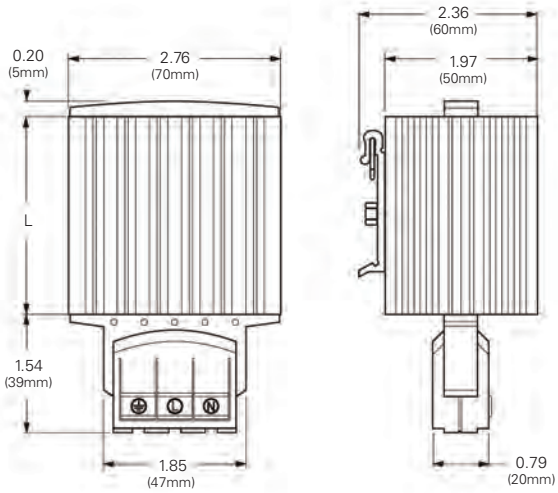

Notes: Data subject to change without notice.
Consult factory for special requirements. Dimensions are in inches. Millimeters shown in ( ) are for reference only.

Heaters
Fan Heaters
Climate Control

Shown: EFH100

Description

Fan heaters are designed to help prevent failure of electronic components caused by condensation, corrosion and low temperature. EFH100-120 series feature a wide wattage range for maximum versatility in a small compact design.

Features

- Small compact size fan heater
- Maintains minimum operating temperatures in enclosures
- Helps prevent failure of electronic components caused by condensation and corrosion
- Built-in overheat protection
- 35 mm DIN rail mountable

Discount Schedule: C2

Subclass: TG0

Catalog Number	Power	Voltage	Air Flow cfm min.	Air Flow m³/h min.
EFH100-120	100W	110-120 VAC	20	35
EFH150-120	150W	110-120 VAC	20	35
EFH200-120	200W	110-120 VAC	63	108
EFH300-120	300W	110-120 VAC	63	108
EFH400-120	400W	110-120 VAC	63	108

100W/150W Heater

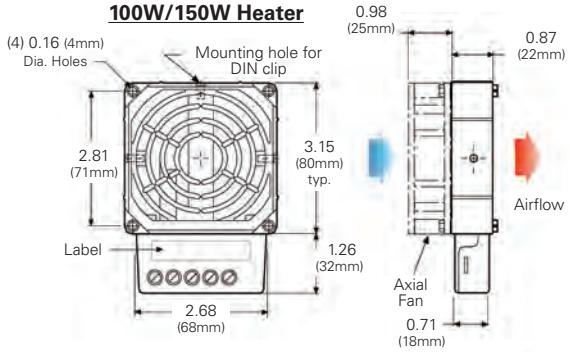

	Technical Data
Heating element:	Resistance type heater
Heat sink:	Die-cast aluminum, glass bead finish
Overheat protection:	Built-in temperature limitor
Air exit temperature:	Approx. 113°F (45°C) 2" (50 mm) above heater
Wiring compartment:	Plastic UL94V-0
Wiring of axial fan:	2 pole terminal (L2/N2), AWG14 max. (2.5 mm²)
Mounting:	Clip for 35 mm DIN rail, EN 50022
Protection type/class:	IP44/I (grounded)
Weight:	100/150W: 0.6 lbs. (240 kg) without fan 200/300/400W: 1.1 lbs. (490 kg) without fan
Agency approvals:	UL

200W/300W/400W Heater

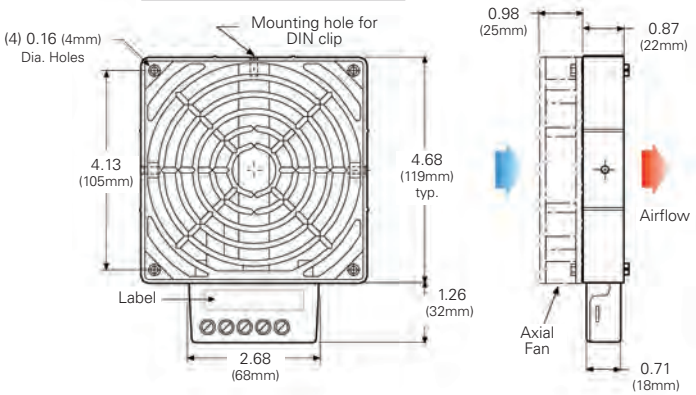

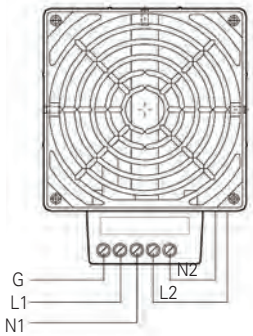

Caution: Heater may only be operated with fan.

Notes: Data subject to change without notice.
Consult factory for special requirements. Dimensions are in inches. Millimeters shown in ( ) are for reference only.

Temperature & Humidity Controls
Small Thermostat
Climate Control

ESTNC-F ESTNO-F

Description
Small thermostats are easy to install and designed to regulate the air temperature inside enclosures. Thermostats increase operating life of fans, heaters and heat exchangers. ESTNC-F (normally closed) thermostat opens at temperature rise and is used to control heaters and low temperature alarms. ESTNO-F (normally open) thermostat closes at temperature rise and is used to control cooling fans, air conditioners and high temperature alarms.

Features
- Compact design
- Wide adjustment range
- Color coded temperature dials
- 35 mm DIN rail mountable
- Tolerance ±7.2°F (4K)
- 2-pole terminal for AWG 14 max.
- Protection type: IP20
- Plastic housing UL94V-0

Discount Schedule: C2
Subclass: TG0

Catalog Number	Contact Type	Switching Capacity @ 120 VAC	Switching Capacity @ 250 VAC	Temperature Range	Dimensions in	Dimensions mm
ESTNC-F	Normally closed	15A resistive/1A inductive	10A resistive/1A inductive	32-140°F	2.4x1.3x1.6	60x33x41
ESTNO-F	Normally opened	15A resistive/1A inductive	10A resistive/1A inductive	32-140°F	2.4x1.3x1.6	60x33x41

Electronic Humidity and Temperature Control

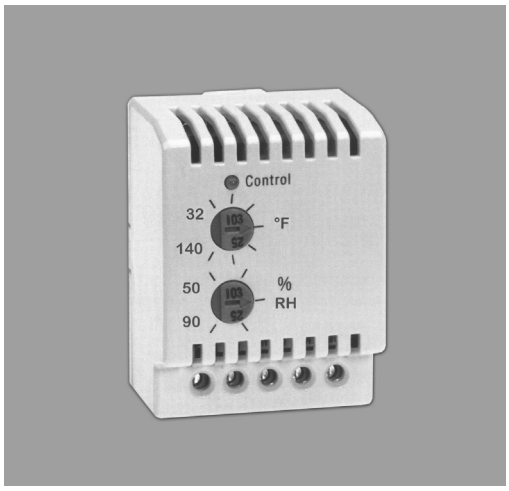

Description
Electronic humidity and temperature control regulates the air temperature and relative humidity inside enclosures. Depending on which contact combination is chosen, the control turns on or off a connected device if either the temperature is below, or the humidity is above the set point.

Features
- Controls both temperature and humidity
- High switching capacity
- Optical function display
- 35 mm DIN rail mountable
- Tolerance ±3.6°F (2k)
- 5-pole terminal for AWG 14 max.
- Protection type: IP20
- Plastic housing UL94V-0

Discount Schedule: C2
Subclass: TG0

Catalog Number	Temperature Range	Humidity Range	Voltage	Hz	Switching Capacity @ 120 VAC	Switching Capacity @ 240 VAC	Dimensions in.	Dimensions mm
EHTC120-F	32-140°F adjustable	50-90% RH adjustable	120 VAC	50/60	8A Resistive 7 FLA/45 LRA	8A Resistive 5 FLA/30 LRA	2.6x2.0x1.5	67x50x39

Contacts	close at...	open at...	use for
3 and 5	humidity rise or temperature drop	humidity drop or temperature rise	heaters dehumidifiers low-temp alarms
4 and 5	humidity drop or temperature rise	humidity rise or temperature drop	cooling humidifiers high-temp alarms

Notes: Data subject to change without notice.
Consult factory for special requirements. Dimensions are in inches. Millimeters shown in ( ) are for reference only.

Panels
JIC & Small Panels, RHC Panels, Type 1 Medium Panels, NEMA Panels, JIC Perforated Panels, Medium Perforated Panels, Flanged Panels, Wood Back Panels, ... 406-413
Panel Accessories - JIC & NEMA Swing Panel Kits, Panel Supports, Lifting Hooks 414-416
Window Kits - Fixed & Hinged 417-418
Door Accessories - Door Stops & Print Pockets 418
Locks, Latches, Inserts, Handles, Clamps
Locks, Latches, Inserts, & Handles 419-429
Clamp Kits, Padlock Kit 430-432
Bolt-On Accessories
Folding Shelf Kit & Gland Plates, Floor Stand Kit & Stabilizer 433-434
Louver Plate Kits, Filters, & Filter Adhesive 435-436
Baffle Plates & Hole Seals, Drip Shields & Casters, Barriers, Component Mounting Device 437-440
Electrical Accessories
JIC & NEMA Terminal Strap & Block Strip Kits 441-443
Terminal Blocks - Channel Mounted & Flat Base, Terminal Strap Support 444-446
Enclosure Lights & Interlocks 446-448
Door Switch & Receptacles 449-450
Disconnect Adapter Kits & Blank Adapter Plates 451
Columns & Bases 452-453
Hardware
Hardware Packages, Ground Lug & Devices, Sealing Devices, Clamping Nuts, Touch-Up Paint 454-456

Panels & Panel Accessories
JIC & Small Panels
Illustration Sheet and Catalog Number

Discount Schedule: C2; A2
Subclass: DSA - JIC
DSE - Small Enclosure

JIC Flat Panel Catalog Number				A		B			Fits Enclosure	
Painted Steel	Galvanized Steel	Stainless	Aluminum	in.	mm	in.	mm	Gauge	Height x Width in.	mm
AW64P	AW64GP	AW64SP	AW64AP	4.87	124	2.87	73	14	6.00x4.00	152x102
AW66P	AW66GP	AW66SP	AW66AP	4.87	124	4.87	124	14	6.00x6.00	152x152
AW86P	AW86GP	AW86SP	AW86AP	6.87	174	4.87	124	14	8.00x6.00	203x152
AW88P	AW88GP	AW88SP	AW88AP	6.87	174	6.87	174	14	8.00x8.00	203x203
AW108P	AW108GP	AW108SP	AW108AP	8.87	225	6.87	174	14	10.00x8.00	254x203
AW1010P	AW1010GP	AW1010SP	AW1010AP	8.87	225	8.87	225	14	10.00x10.00	254x254
AW126P	—	—	—	10.87	276	4.87	124	14	12.00x6.00	305x152
AW1210P	AW1210GP	AW1210SP	AW1210AP	10.87	276	8.87	225	14	12.00x10.00	305x254
AW1212P	AW1212GP	AW1212SP	AW1212AP	10.87	276	10.87	276	14	12.00x12.00	305x305
AW148P	—	—	—	12.87	327	6.87	174	14	14.00x8.00	356x203
AW1412P	AW1412GP	AW1412SP	AW1412AP	12.87	327	10.87	276	14	14.00x12.00	356x305
AW1610P	—	—	—	14.87	378	8.87	225	14	16.00x10.00	406x254
AW1614P	AW1614GP	AW1614SP	AW1614AP	14.87	378	12.87	327	14	16.00x14.00	406x356

Small Enclosure Flat Panel Catalog Number	A		B		Gauge	Fits Enclosure Height x Width	
	in.	mm	in.	mm		in.	mm
N66P	4.25	108	4.25	108	14	6.00x6.00	152x152
N86P	6.25	159	4.25	108	14	8.00x6.00	203x152
N88P	6.25	159	6.25	159	14	8.00x8.00	203x203
N108P	8.25	210	6.25	159	14	10.00x8.00	254x203
N1010P	8.25	210	8.25	210	14	10.00x10.00	254x254
N1210P	10.25	260	8.25	210	14	12.00x10.00	305x254
N1212P	10.25	260	10.25	260	14	12.00x12.00	305x305
N1412P	12.25	360	10.25	260	14	14.00x12.00	356x305
N2012P	18.25	463	10.25	260	14	20.00x12.00	508x305

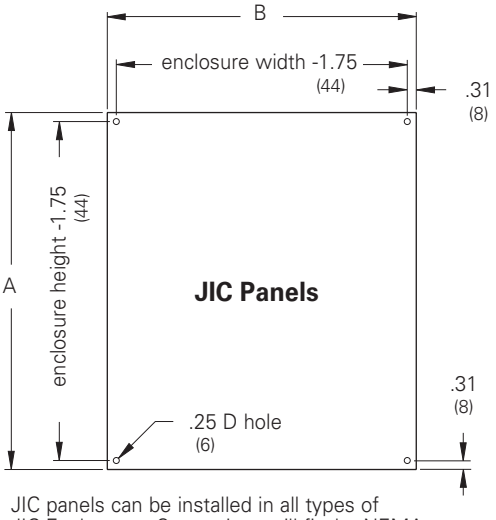

JIC panels can be installed in all types of JIC Enclosures. Some sizes will fit the NEMA 12 Lay-In Wireway Junction Box. Panels are available in steel, galvanized steel, stainless and aluminum. Painted steel panels have a white powder finish. Stainless steel and aluminum panels have a smooth brushed finish on one side and protected with PVC film.

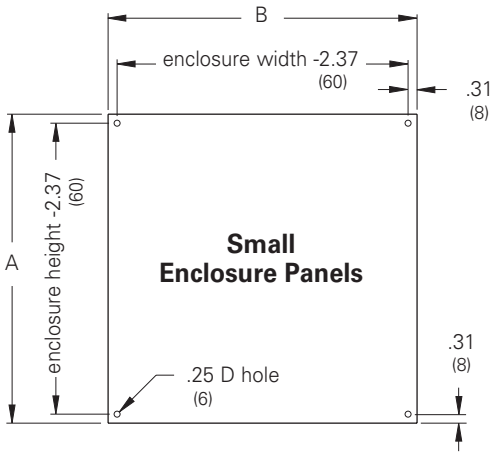

Small Enclosure panels can be installed in Small Type 3R RHC and Small Type 1 Enclosures. Panels are only available in steel, and have a white powder finish.

Notes: Dimensions are in inches. Millimeters shown are for reference only. Data subject to change without notice.

Panels & Panel Accessories
RHC Panels
Illustration Sheet and Catalog Number

Discount Schedule: C2
Subclass: DSE

Flat Panel Catalog Number	A in.	A mm	B in.	B mm	Gauge	Fits Enclosure Height x Width in.	Fits Enclosure Height x Width mm
N1612P	13.00	330	9.00	229	12	16.00x12.00	406x305
N1616P	13.00	330	13.00	330	12	16.00x16.00	406x406
N1818P	15.00	381	15.00	381	12	18.00x18.00	457x457
N2016P	17.00	432	13.00	330	12	20.00x16.00	508x406
N2020P	17.00	432	17.00	432	12	20.00x20.00	508x508

Flanged Panel Catalog Number	A in.	A mm	B in.	B mm	Gauge	Fits Enclosure Height x Width in.	Fits Enclosure Height x Width mm
N2420P	20.87	530	16.87	428	12	24.00x20.00	610x508
N2424P	20.87	530	20.87	530	12	24.00x24.00	610x610
N3024P	26.87	682	20.87	530	12	30.00x24.00	762x610
N3624P	32.87	835	20.87	530	12	36.00x24.00	914x610
N3030P	26.87	682	26.87	682	12	30.00x30.00	762x762
N3630P	32.87	835	26.87	682	12	36.00*x30.00*	914x762
N4230P	38.87	987	26.87	682	12	42.00*x30.00*	1067x762
N4830P	44.87	1140	26.87	682	12	48.00*x30.00*	1219x762
N3636P	32.87	835	32.87	835	12	36.00x36.00	914x914
N4236P	38.87	987	32.87	835	12	42.00*x36.00*	1067x914
N4836P	44.87	1140	32.87	835	12	48.00*x36.00*	1219x914
N6036P	56.87	1444	32.87	835	12	60.00x36.00	1524x914

* Panel also fits these enclosures when height and width dimensions are reversed.

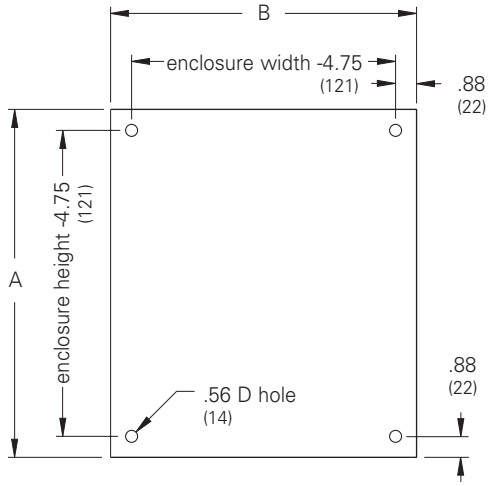

RHC Flat Panels can be installed in Large Type 3R RHC Enclosures. Panels are only available in steel and have a white powder paint finish.

RHC Flat Panels

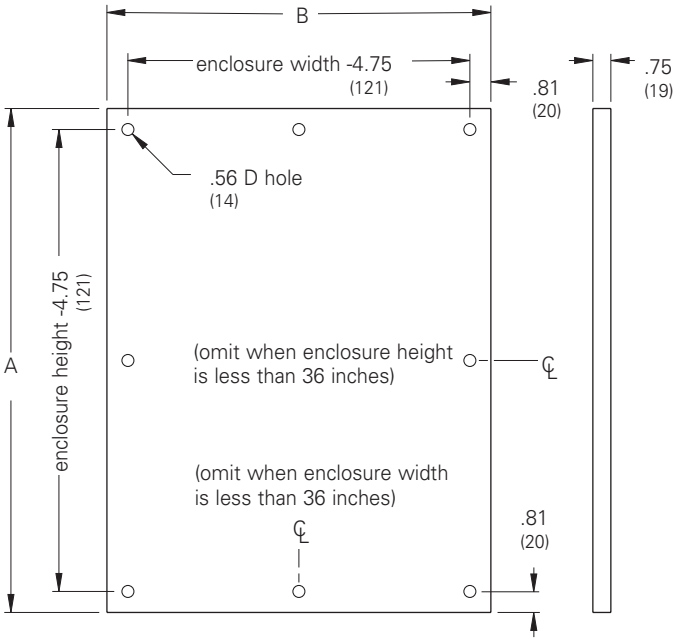

RHC Flanged Panels can be installed in Large Type 3R RHC Enclosures. Panels are only available in steel and have a white powder paint finish.

RHC Flanged Panels

Notes: Dimensions are in inches. Millimeters shown are for reference only. Data subject to change without notice.

Panels & Panel Accessories
Type 1 Medium Enclosure & NEMA Flat Panels
Illustration Sheet and Catalog Number

Discount Schedule: C2
Subclass: DSF - Type 1 Medium
DSB - NEMA

Type 1 Medium Enclosure Flat Panel Catalog Number	A in.	A mm	B in.	B mm	C in.	C mm	D in.	D mm	Gauge	Fits Enclosure Height x Width in.	Fits Enclosure Height x Width mm
AW1612-1P	13.00	330	10.50	267	11.50	292	9.00	228	14	16.00x12.00	406X305
AW1616-1P	13.00	330	14.50	368	11.50	292	13.00	330	14	16.00x16.00	406X406
AW1620-1P	13.00	330	18.50	470	11.50	292	17.00	432	14	16.00x20.00	406X508
AW2016-1P	17.00	432	14.50	368	15.50	394	13.00	330	14	20.00x16.00	508X406
AW2020-1P	17.00	432	18.50	470	15.50	394	17.00	432	14	20.00x20.00	508X508
AW2024-1P	17.00	432	22.50	572	15.50	394	21.00	533	14	20.00x24.00	508X610
AW2416-1P	21.00	533	14.50	368	19.50	495	13.00	330	14	24.00x16.00	610X406
AW2420-1P	21.00	533	18.50	470	19.50	495	17.00	432	14	24.00x20.00	610X508
AW2424-1P	21.00	533	22.50	572	19.50	495	21.00	533	14	24.00x24.00	610X610
AW3020-1P	26.00	660	18.50	470	24.50	622	17.00	432	14	30.00x20.00	762X508
AW3024-1P	26.00	660	22.50	572	24.50	622	21.00	533	14	30.00x24.00	762X610
AW3030-1P	26.00	660	28.50	724	24.50	622	27.00	686	14	30.00x30.00	762X762
AW3624-1P	32.00	813	22.50	572	30.50	775	21.00	533	14	36.00x24.00	914X610
AW3630-1P	32.00	813	28.50	724	30.50	775	27.00	686	14	36.00x30.00	914X762
AW4224-1P	38.00	965	22.50	572	36.50	927	21.00	533	14	42.00x24.00	1067X610

NEMA Flat Panel Catalog Number Painted Steel	Galvanized Steel	Stainless	Aluminum	A in.	A mm	B in.	B mm	C in.	C mm	D in.	D mm	Gauge	Fits Enclosure Height x Width in.	Fits Enclosure Height x Width mm
AW1612P	AW1612GP	AW1612SP	AW1612AP	13.00	330	9.00	229	11.25	286	7.25	184	12	16.00x12.00	406x305
AW1616P	AW1616GP	AW1616SP	AW1616AP	13.00	330	13.00	330	11.25	286	11.25	286	12	16.00x16.00	406x406
AW2012P	—	—	—	17.00	432	9.00	229	15.25	387	7.25	184	12	20.00x12.00	508x305
AW2016P	AW2016GP	AW2016SP	AW2016AP	17.00	432	13.00	330	15.25	387	11.25	286	12	20.00*x16.00*	508x406
AW2020P	AW2020GP	AW2020SP	AW2020AP	17.00	432	17.00	432	15.25	387	15.25	387	12	20.00x20.00	508x508
AW2412P	—	AW2412SP	—	21.00	533	9.00	229	19.25	489	7.25	184	12	24.00*x12.00*	610x305
AW2416P	AW2416GP	AW2416SP	AW2416AP	21.00	533	13.00	330	19.25	489	11.25	286	12	24.00x16.00	610x406

* Panel also fits these enclosures when height and width dimensions are reversed.

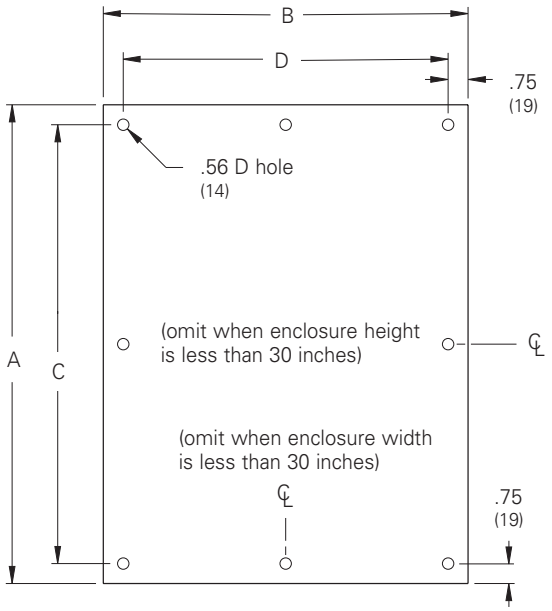

Type 1 medium enclosure panels can be installed in Type 1 medium panel enclosures. Panels are only available in steel and have a white powder paint finish.

Type 1 Medium Enclosure Panels

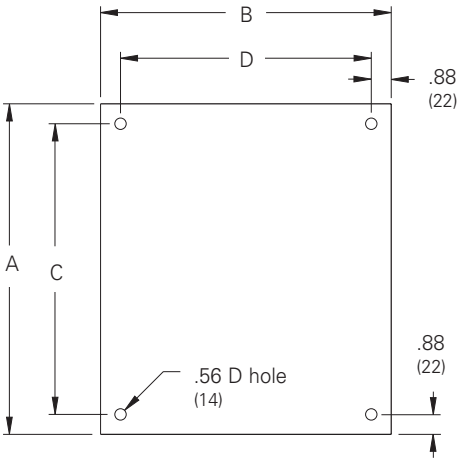

NEMA flat panels can be installed in Type 4X, Type 4 and Type 12 NEMA Enclosures. Panels are available in steel, galvanized steel, stainless steel, and aluminum. Painted steel panels have a white powder paint finish. Stainless steel and aluminum panels have a smooth brushed finish on one side and protected with PVC film.

NEMA Flat Panels

Notes: Dimensions are in inches. Millimeters shown are for reference only. Data subject to change without notice.

Panels & Panel Accessories
JIC & Small Enclosure Perforated Panels

Discount Schedule: C2; A2
Subclass: DSG

Illustration Sheet and Catalog Number

JIC Flat Perforated Panel						Fits Enclosure Height x Width	
Catalog Number	A in.	A mm	B in.	B mm	Gauge	in.	mm
AW64PP	4.87	124	2.87	73	16	6.00x4.00	152x102
AW66PP	4.87	124	4.87	124	16	6.00x6.00	152x152
AW86PP	6.87	174	4.87	124	16	8.00x6.00	203x152
AW88PP	6.87	174	6.87	174	16	8.00x8.00	203x203
AW108PP	8.87	225	6.87	174	16	10.00x8.00	254x203
AW1010PP	8.87	225	8.87	225	16	10.00x10.00	254x254
AW126PP	10.87	276	4.87	124	16	12.00x6.00	305x152
AW1210PP	10.87	276	8.87	225	16	12.00x10.00	305x254
AW1212PP	10.87	276	10.87	276	16	12.00x12.00	305x305
AW148PP	12.87	327	6.87	174	16	14.00x8.00	356x203
AW1412PP	12.87	327	10.87	276	16	14.00x12.00	356x305
AW1610PP	14.87	378	8.87	225	16	16.00x10.00	406x254
AW1614PP	14.87	378	12.87	327	16	16.00x14.00	406x356

Panels are available in steel and have a white powder paint finish.

Small Enclosure Flat Perforated Panel						Fits Enclosure Height x Width	
Catalog Number	A in.	A mm	B in.	B mm	Gauge	in.	mm
N66PP	4.25	108	4.25	108	16	6.00x6.00	152x152
N86PP	6.25	159	4.25	108	16	8.00x6.00	203x152
N88PP	6.25	159	6.25	159	16	8.00x8.00	203x203
N108PP	8.25	210	6.25	159	16	10.00x8.00	254x203
N1010PP	8.25	210	8.25	210	16	10.00x10.00	254x254
N1210PP	10.25	260	8.25	210	16	12.00x10.00	305x254
N1212PP	10.25	260	10.25	260	16	12.00x12.00	305x305
N1412PP	12.25	360	10.25	260	16	14.00x12.00	356x305
N2012PP	18.25	463	10.25	260	16	20.00x12.00	508x305

Panels are available in steel and have a white powder paint finish.

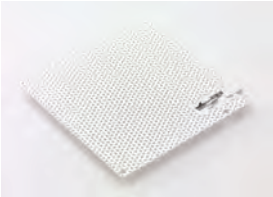

Hardware Packages

Catalog Number	Description	Typical Use	Quantity
10168	#8-32 x .375 inch selt tap steel screw	NEMA 1 & JIC performed panels	20

JIC Enclosure Perforated Panels

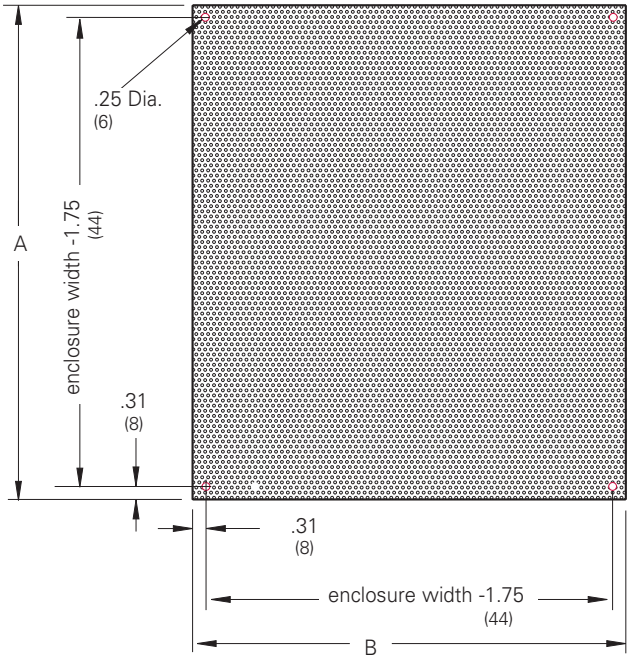

JIC perforated panels can be installed in all types of JIC Enclosures, and are intended for mounting lightweight components without drilling and tapping.

Small Enclosure Perforated Panels

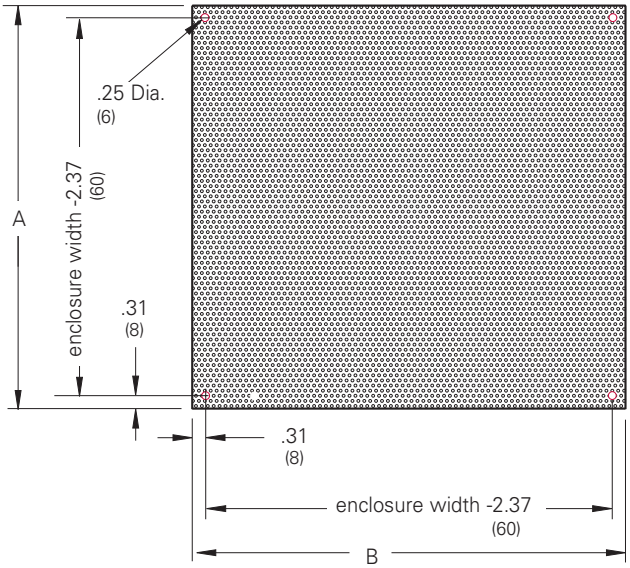

Small enclosure perforated panels can be installed in small Type 3R RHC, and small Type 1 Enclosures, and are intended for mounting lightweight components without drilling and tapping.

.25
(6)

.25
(6)

.125
(3)

60°

Notes: Dimensions are in inches. Millimeters shown are for reference only. Data subject to change without notice.

Panels & Panel Accessories
Medium Perforated Panels
Illustration Sheet and Catalog Number

Discount Schedule: C2
Subclass: DSG

Type 1 Medium Enclosure Flat Perforated Panel Catalog Number	A		B		C		D		Gauge	Fits Enclosure Height x Width	
	in.	mm	in.	mm	in.	mm	in.	mm		in.	mm
AW1612-1PP	13.00	330	10.50	267	11.50	292	9.00	228	16	16.00x12.00	406X305
AW1616-1PP	13.00	330	14.50	368	11.50	292	13.00	330	16	16.00x16.00	406X406
AW1620-1PP	13.00	330	18.50	470	11.50	292	17.00	432	16	16.00x20.00	406X508
AW2016-1PP	17.00	432	14.50	368	15.50	394	13.00	330	16	20.00x16.00	508X406
AW2020-1PP	17.00	432	18.50	470	15.50	394	17.00	432	16	20.00x20.00	508X508
AW2024-1PP	17.00	432	22.50	572	15.50	394	21.00	533	16	20.00x24.00	508X610
AW2416-1PP	21.00	533	14.50	368	19.50	495	13.00	330	16	24.00x16.00	610X406
AW2420-1PP	21.00	533	18.50	470	19.50	495	17.00	432	16	24.00x20.00	610X508
AW2424-1PP	21.00	533	22.50	572	19.50	495	21.00	533	16	24.00x24.00	610X610
AW3020-1PP	26.00	660	18.50	470	24.50	622	17.00	432	16	30.00x20.00	762X508
AW3024-1PP	26.00	660	22.50	572	24.50	622	21.00	533	16	30.00x24.00	762X610
AW3030-1PP	26.00	660	28.50	724	24.50	622	27.00	686	16	30.00x30.00	762X762
AW3624-1PP	32.00	813	22.50	572	30.50	775	21.00	533	16	36.00x24.00	914X610
AW3630-1PP	32.00	813	28.50	724	30.50	775	27.00	686	16	36.00x30.00	914X762
AW4224-1PP	38.00	965	22.50	572	36.50	927	21.00	533	16	42.00x24.00	1067X610

Hardware Packages

Catalog Number	Description	Typical Use	Quantity
10168	#8-32 x .375 inch selt tap steel screw	NEMA 1 & JIC performed panels	20

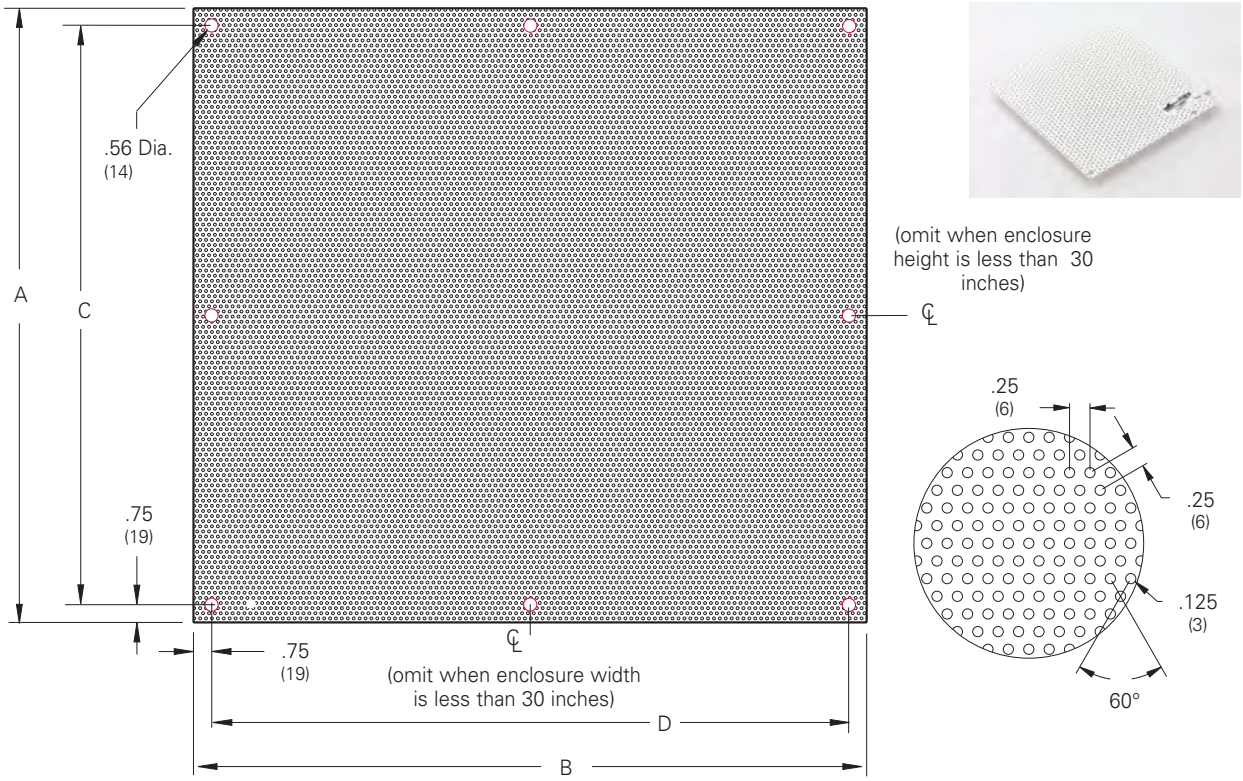

Type 1 medium enclosure perforated panels can be installed in Type 1 Medium Panel Enclosures. Panels are available in steel and have a white powder paint finish.

Type 1 Medium Enclosure Perforated Panels

Notes: Dimensions are in inches. Millimeters shown are for reference only. Data subject to change without notice.

Panels & Panel Accessories
NEMA Flanged Panels
Illustration Sheet and Catalog Number

Discount Schedule: C2
Subclass: DSB

NEMA Flanged Panel Catalog Number				A		B			Fits Enclosure Height x Width	
Painted Steel	Galvanized Steel	Stainless	Aluminum	in.	mm	in.	mm	Gauge	in.	mm
AW2420P	AW2420GP	AW2420SP	AW2420AP	20.87	530	16.87	428	12	24.00*x20.00*	610x508
AW2424P	AW2424GP	AW2424SP	AW2424AP	20.87	530	20.87	530	12	24.00x24.00	610x610
AW3016P	AW3016GP	AW3016SP	AW3016AP	26.87	682	12.87	327	12	30.00x16.00	762x406
AW3020P	AW3020GP	AW3020SP	AW3020AP	26.87	682	16.87	428	12	30.00x20.00	762x508
AW3024P	AW3024GP	AW3024SP	AW3024AP	26.87	682	20.87	530	12	30.00*x24.00*	762x610
AW3030P	AW3030GP	AW3030SP	AW3030AP	26.87	682	26.87	682	12	30.00x30.00	762x762
AW3624P	AW3624GP	AW3624SP	AW3624AP	32.87	835	20.87	530	12	36.00x24.00	914x610
AW3630P	AW3630GP	AW3630SP	AW3630AP	32.87	835	26.87	682	12	36.00*x30.00*	914x762
AW3636P	—	AW3636SP	—	32.87	835	32.87	835	12	36.00x36.00	914x914
AW4224P	—	—	—	38.87	987	20.87	530	12	42.00*x24.00*	1067x610
AW4230P	AW4230GP	AW4230SP	AW4230AP	38.87	987	26.87	682	12	42.00*x30.00*	1067x762
AW4236P	AW4236GP	AW4236SP	AW4236AP	38.87	987	32.87	835	12	42.00x36.00	1067x914
AW4242P	—	—	—	38.87	987	38.87	987	12	42.00x42.00	1067x1067
AW4824P	—	—	—	44.87	1140	20.87	530	12	48.00*x24.00*	1219x610
AW4830P	AW4830GP	AW4830SP	—	44.87	1140	26.87	682	12	48.00*x30.00*	1219x762
AW4836P	AW4836GP	AW4836SP	AW4836AP	44.87	1140	32.87	835	12	48.00*x36.00*	1219x914
AW4842P	AW4842GP	AW4842SP	AW4842AP	44.87	1140	38.87	987	12	48.00*x42.00*	1219x1067
AW4848P	—	—	—	44.87	1140	44.87	1140	12	48.00x48.00	1219x1219
AW6030P	—	—	—	56.87	1444	26.87	682	12	60.00*x30.00*	1524x762
AW6036P	AW6036GP	AW6036SP	AW6036AP	56.87	1444	32.87	835	12	60.00*x36.00*	1524x914
AW7230P	—	—	—	68.87	1749	26.87	682	12	72.00x30.00	1829x762
AW7236P	—	—	—	68.87	1749	32.87	835	12	72.00x36.00	1829x914

* Panel also fits these enclosures when height and width dimensions are reversed.

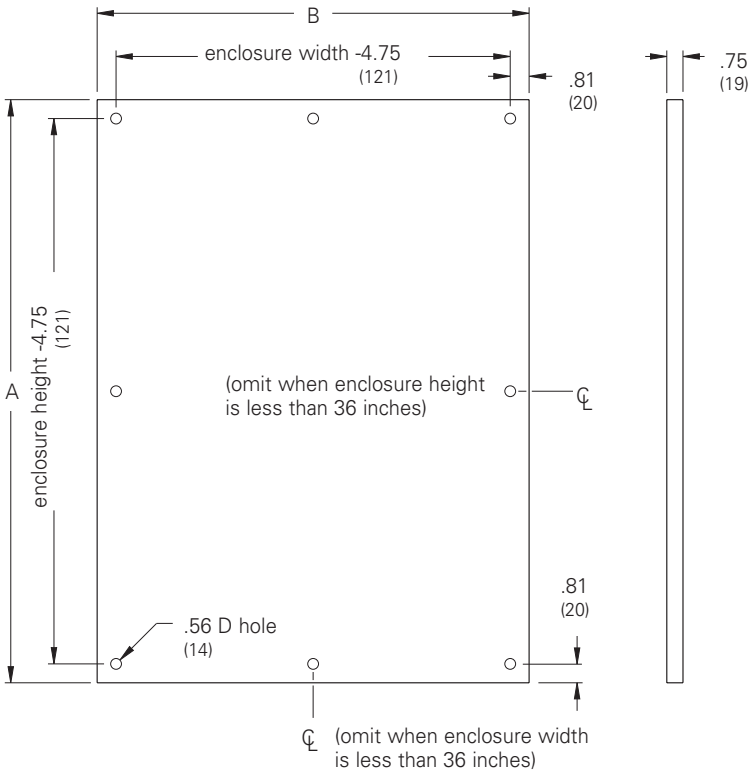

NEMA Flanged Panels can be installed in consoles, Type 4X, Type 4, and Type 12 NEMA Enclosures. Panels are available in steel, galvanized steel, stainless steel and aluminum. Painted steel panels have a white powder paint finish. Stainless steel and aluminum panels have a smooth brushed finish on one side and protected with PVC film.

Notes: Dimensions are in inches. Millimeters shown are for reference only. Data subject to change without notice.

Panels & Panel Accessories
Large NEMA Flanged Panels
Illustration Sheet and Catalog Number

Discount Schedule: C2
Subclass: DSC

Panel Catalog Number			A		B		C			Fits Enclosure* Height x Width	
Steel	Stainless	Aluminum	in.	mm	in.	mm	in.	mm	Gauge	in.	mm
AW5442P	—	—	49.87	1267	37.87	962	—	—	10	54.00x42.00	1372X1067
AW6042P	—	—		—	56.87	1444	38.87	987	12	60.00*x42.00*	1524x1067
AW6048P	AW6048SP	AW6048AP	55.87	1419	43.87	1114	—	—	10	60.00x48.00	1524X1219
AW6060P	AW6060SP	AW6060AP	55.87	1419	55.87	1419	—	—	10	60.00x60.00	1524X1524
AW7260P	AW7260SP	AW7260AP	67.87	1724	55.87	1419	22.06	560	10	72.00x60.00	1829X1524
AW7272P	AW7272SP	AW7272AP	67.87	1724	67.87	1724	22.06	560	10	72.00x72.00	1829X1829

*Panel also fits Type 4X and Type 4 where the height is 2.00 inches more than shown in the table

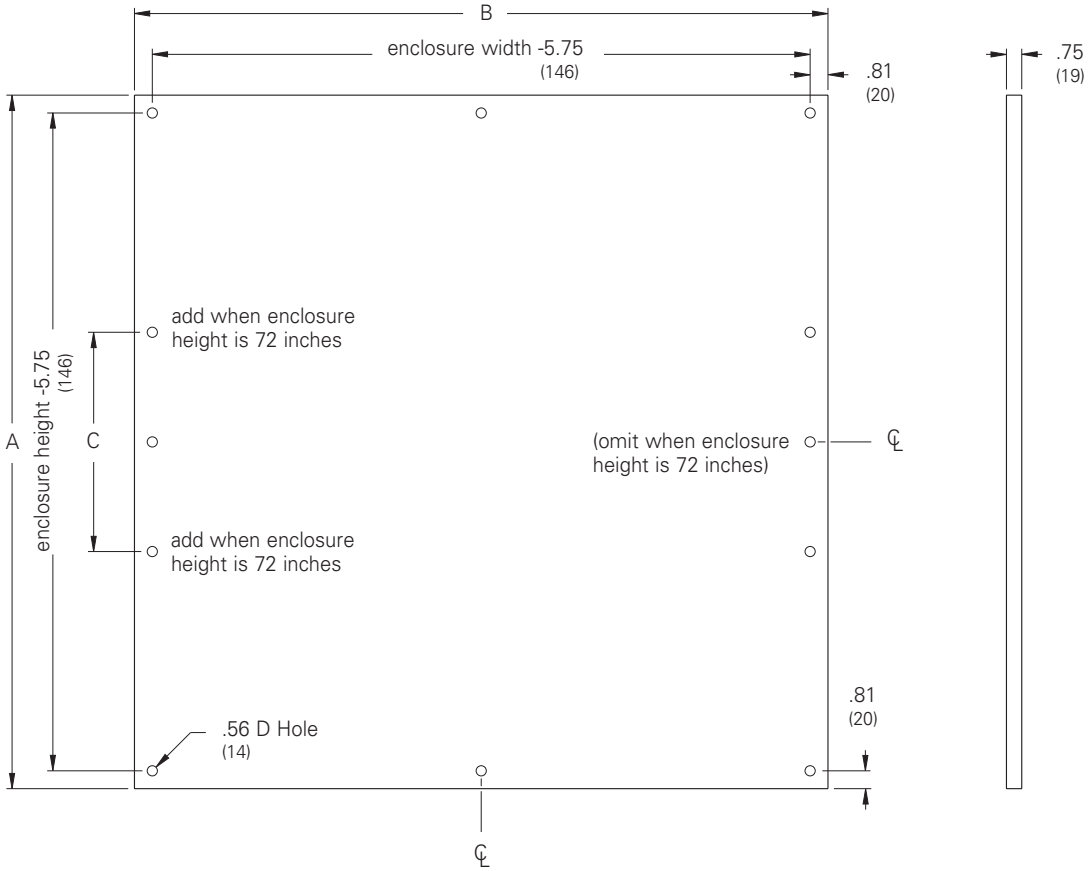

Large Flanged Panels can be installed in Floor Standing Type 4X, Type 4 and Type 12 Enclosures. Handle Kits are furnished with each panel. Steel panels have a white powder paint finish. Stainless steel and aluminum panels have a smooth brushed finish on one side and protected with PVC film.

Notes: Dimensions are in inches. Millimeters shown are for reference only. Data subject to change without notice.

Panels & Panel Accessories
Wood Back Panels
Illustration Sheet and Catalog Number

Discount Schedule: A2
Subclass: AQ0

Wood Back Board Catalog Number	A in.	A mm	B in.	B mm	Fits Enclosure Height x Width in.	Fits Enclosure Height x Width mm
88 WB	5.00	127	5.00	127	8.00x8.00	203x203
1010 WB	7.00	178	7.00	178	10.00x10.00	254x254
128 WB	9.00	229	5.00	127	12.00x8.00	350x203
1210 WB	9.00	229	7.00	178	12.00x10.00	305x254
1212 WB	9.00	229	9.00	229	12.00x12.00	305x305
1612 WB	13.00	330	9.00	229	16.00x12.00	406x305
1812 WB	15.00	381	9.00	229	18.00x12.00	457x305
1815 WB	15.00	381	12.00	305	18.00x15.00	457x381
1818 WB	15.00	381	15.00	381	18.00x18.00	457x457
2412 WB	21.00	533	9.00	229	24.00x12.00	610x305
2418 WB	21.00	533	15.00	381	24.00x18.00	610x457
2424 WB	21.00	533	21.00	533	24.00x24.00	610x610
3015 WB	27.00	686	12.00	305	30.00x15.00	762x381
3018 WB	27.00	686	15.00	381	30.00x18.00	762x457
3024 WB	27.00	686	21.00	533	30.00x24.00	762x610
3030 WB	27.00	686	27.00	686	30.00x30.00	762x762
3624 WB	33.00	838	21.00	533	36.00x24.00	914x610
3630 WB	33.00	838	27.00	686	36.00x30.00	914x762
3636 WB	33.00	838	33.00	838	36.00x36.00	914x914
4824 WB	45.00	1143	21.00	533	48.00x24.00	1219x610
4836 WB	45.00	1143	33.00	838	48.00x36.00	1219x914
4848 WB	45.00	1143	45.00	1143	48.00x48.00	1219x1219

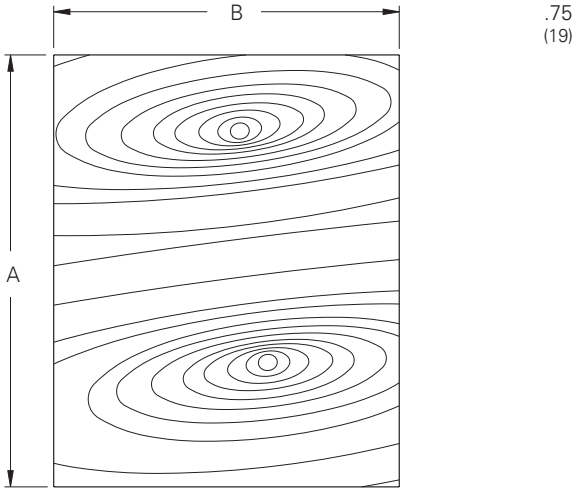

Wood back boards are intended for Type 1 and Type 3R Telephone Termination Cabinets. However, they may be installed in any enclosure that will accommodate the board size. Standard boards are cut from shop grade type CDX plywood with one side finished smooth. Boards normally are not treated or painted. Consult the factory for special cuts, holes, finishes or wood treating.

Notes: Dimensions are in inches. Millimeters shown are for reference only. Data subject to change without notice.

Panels & Panel Accessories
JIC Swing Panels
Illustration Sheet and Catalog Number

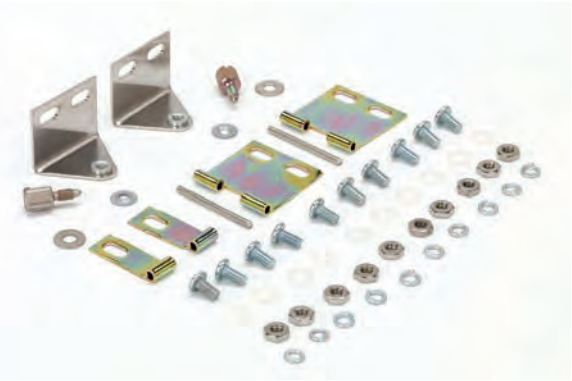

Catalog Number	Description
JICSPK	For use with JIC Enclosures that are 8.00 (203 mm) x 6.00 (152 mm) inches or larger. The distributed weight of panel and equipment should not exceed 25 pounds.

This kit offers a means for mounting user's components and equipment near the front of an enclosure opening for easy access. The JIC Swing Panel Kit includes two hinge brackets, two fastening brackets, knurled thumb screws, retaining hardware and instructions for installing standard panels. Panels must be ordered separately.

Discount Schedule: C2
Subclass: DS0

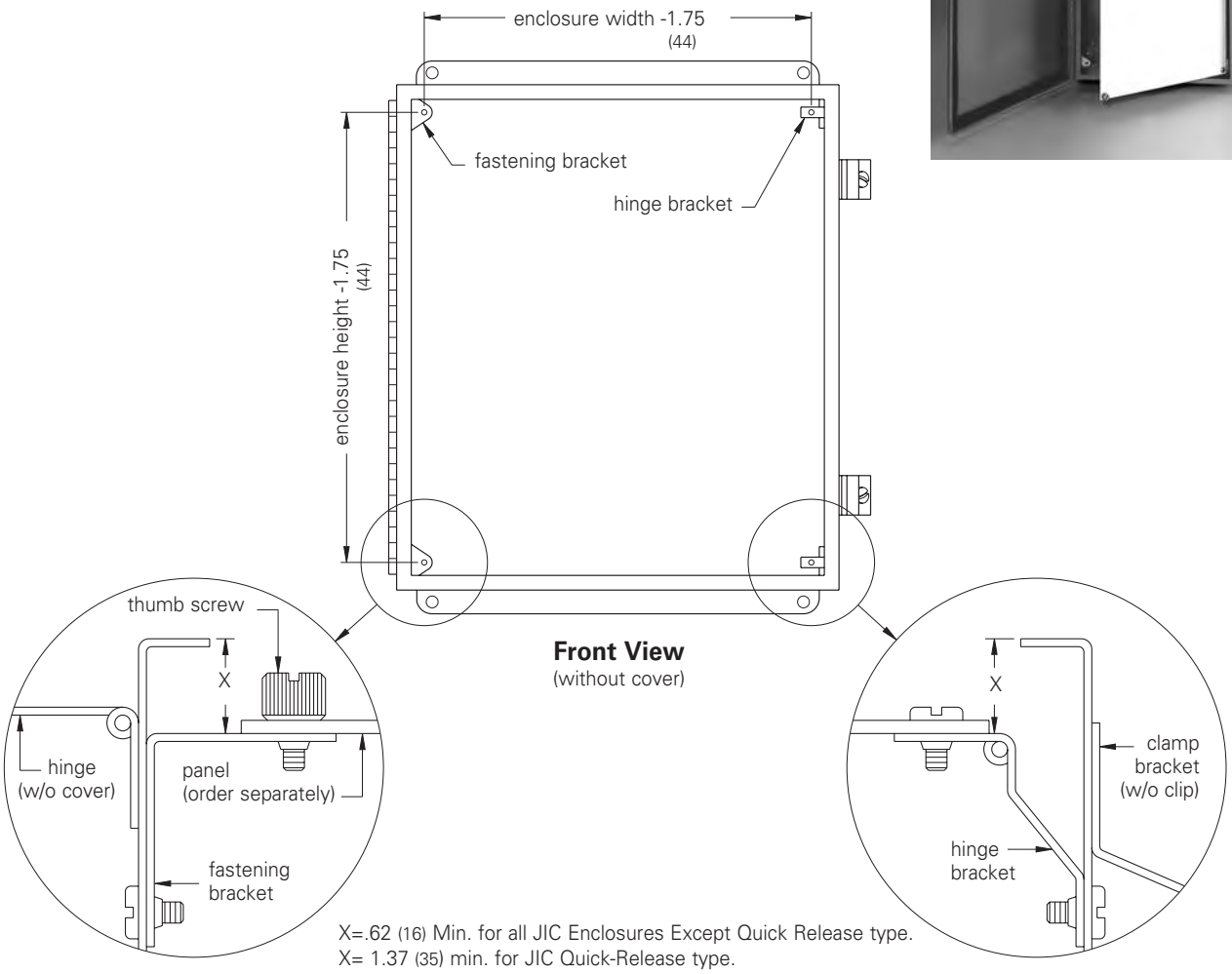

Panel Fastening Detail

Panel Hinge Detail

Notes: Dimensions are in inches. Millimeters shown are for reference only. Data subject to change without notice.

Panels & Panel Accessories
NEMA Swing Panels
Illustration Sheet and Catalog Number

Catalog Number	Description
NSPK	For use with Type 4, Type 4X, and Type 12 Single Door Enclosures 16.00 (406 mm) x 12.00 (305 mm) and larger, provided the distributed weight of panel and equipment does not exceed 100 pounds. Also used on the Larger Type 12 CHSC and Larger Type 3R RHC Enclosure.

This kit offers a means for mounting user components and equipment near the front of an enclosure opening for easy access. The NEMA Swing Panel Kit includes two hinge brackets, two fastening brackets, knurled thumb screws, retaining hardware, bracket mounting hardware and instructions for installing standard panels. Panels must be ordered separately.

Discount Schedule: C2
Subclass: DS0

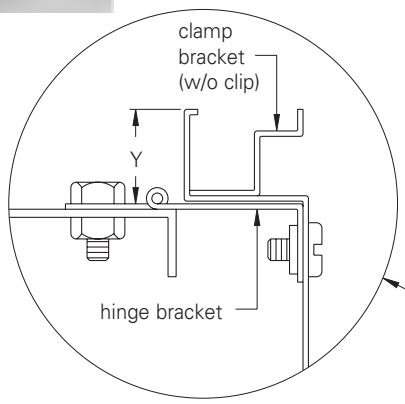

Panel Hinge Detail

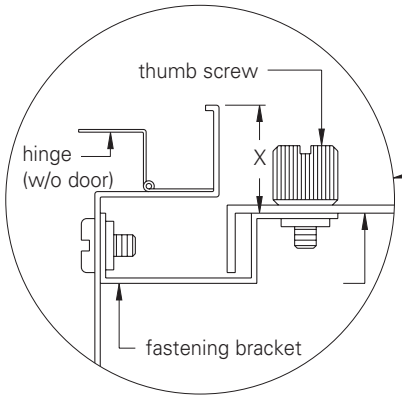

Panel Fastening Detail

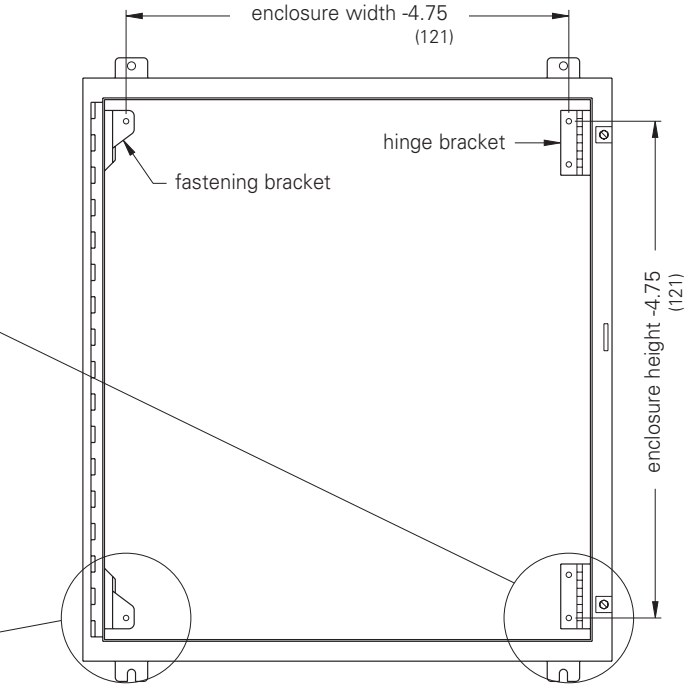

Front View
(without door)

X= 1.37 (35) min. Type 4, Type 4X, & Type 12 Single door, and Large Type 3R RHC Enclosures

Y= 1.25 (32) min. Type 4, Type 4X, & Type 12 Single door, and Large Type 3R RHC Enclosures

X= 1.00 (25) min. Large Type 12 CHSC Enclosures

Y= .87 (22) min. Large Type 12 CHSC Enclosures

Notes: Large Type 12 CHSC Enclosures have back panels installed. Dimensions are in inches. Millimeters shown are for reference only. Data subject to change without notice.

Panels & Panel Accessories

Illustration Sheet and Catalog Number

Discount Schedule: C2
Subclass: DS0

Panel Supports

Panel Support Kits

Catalog Number	Description
PS3	For use on Single Door and Double-Door Floor-Standing Enclosure Panels
PS9	For use on Free-Standing and Multi-Door Free-Standing Enclosure Panels

Designed to provide additional support to panels which are burdened with heavy equipment. Supports fit over the bottom corner collar Studs. Each support bracket can be adjusted so that the load can be shared between the support and the stud. A "jam" nut maintains the adjustment. At the base of the support bracket is a nylon shoe to prevent damage to the interior finish. Two support brackets assemblies are furnished with each kit.

Lifting Hooks

Panel Lifting Hooks

Catalog Number	Description
PLH	Panel lifting hooks

Two (2) Panel lifting hooks are used for picking up and moving large panels. The hooks are designed to be used on back panels while laying flat.

Notes: Dimensions are in inches. Millimeters shown are for reference only. Data subject to change without notice.

Window Kits
Fixed Window
Illustration Sheet and Catalog Number

Discount Schedule: C2
Subclass: DS0

Framed Window Kits Catalog Number		Frame Detail				Window Detail				Enclosure Cut-Out	
		A		B		C		D			
Steel	Stainless	in.	mm	in.	mm	in.	mm	in.	mm	in.	mm
PWK53	PWK53SS	7.50	191	5.50	140	5.00	127	3.00	76	6.62x4.62	168x117
PWK95	PWK95SS	11.50	292	8.00	203	9.00	229	5.50	140	10.62x7.12	270x181
PWK133	PWK133SS	15.50	394	5.50	140	13.00	330	3.00	76	14.62x4.62	371x117
PWK138	PWK138SS	15.50	394	10.50	267	13.00	330	8.00	203	14.62x9.62	371x244
PWK175	PWK175SS	19.50	495	8.00	203	17.00	432	5.50	140	18.62x7.12	473x181
PWK1711	PWK1711SS	19.50	495	13.50	343	17.00	432	11.00	279	18.62x12.62	473x321
PWK2315	PWK2315SS	25.50	648	17.50	445	23.00	584	15.00	381	24.62x16.62	625x422
PWK2919	PWK2919SS	31.50	800	21.50	546	29.00	737	19.00	483	30.62x20.62	778x524
PWK3523	PWK3523SS	37.50	953	25.50	648	35.00	889	23.00	584	36.62x24.62	930x625

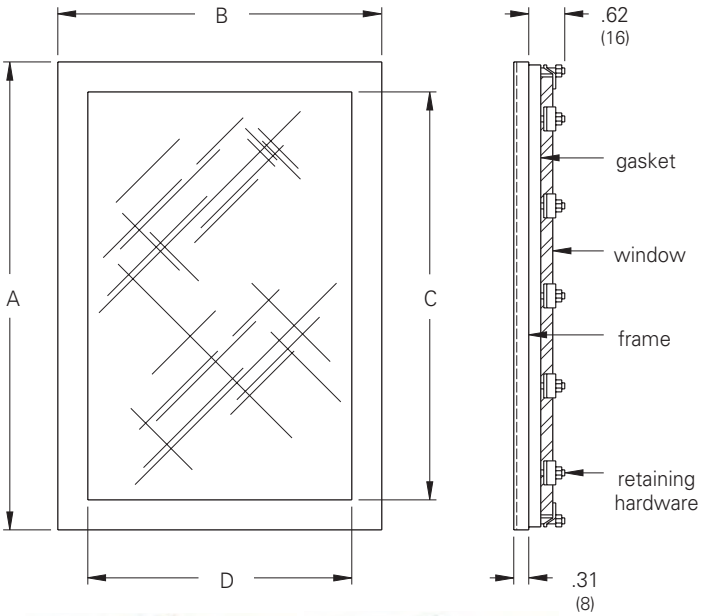

Steel Framed Window Kits are designed for use with Type 4 and Type 12 Enclosures. Stainless Steel Framed Window Kits are for use with Type 4X Enclosures, however, they can also be used on Type 4 and Type 12, if additional corrosion protection is needed. Steel kits are constructed from heavy gauge and have an ANSI 61 gray polyester powder finish. Stainless steel kits are constructed from Type 304 stainless and have a brushed finish. Each kit includes a .25 inch (6 mm) thick polycarbonate window and gasket to ensure a tight, oil and water-resistant seal around the enclosure cut-out. Hardware and instructions for field installation are also furnished. UL Listed.

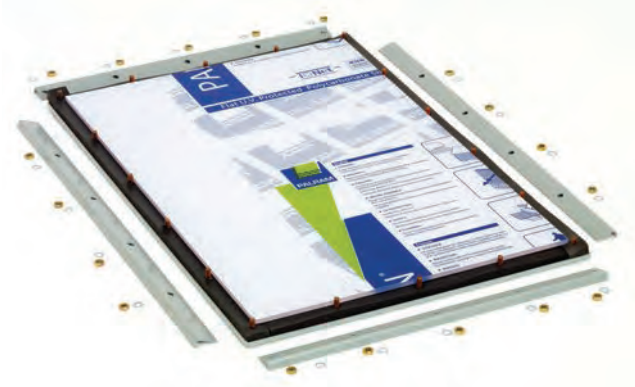

Frameless Window Kits

Catalog Number	Window Size in.	Window Size mm	Enclosure cut-out (max) in.	Enclosure cut-out (max) mm
FLWK52	6.00 x 3.00	152 x 76	5.00 x 2.00	127 x 51
FLWK96	10.00 x 7.00	254 x 178	9.00 x 6.00	229 x 152
FLWK133	14.00 x 4.00	356 x 102	13.00 x 3.00	330 x 76

Frameless Window Kits are intended for use with Type 1 and Type 12 Enclosures. Each kit includes a roll of .50 inch (13 mm) wide double-sided adhesive tape and a .12 inch (3 mm) thick polycarbonate window. Instructions for mounting and hardware are also furnished. UL listed.

Notes: Dimensions are in inches. Millimeters shown are for reference only. Data subject to change without notice.

Window & Door Kit Accessories

Illustration Sheet and Catalog Number

Discount Schedule: C2
Subclass: DS0

Hinged Windows

Front Side

Back Side

Framed Window Kits	Frame Detail				Window Detail				Enclosure	
	Height		Width		Height		Width		Cut-Out	
Catalog Number	in.	mm	in.	mm	in.	mm	in.	mm	in.	mm
HWK1212	12.50	318	12.50	318	10.12	257	10.12	257	11.87x11.87	301x301
HWK1612	16.50	419	12.50	318	14.12	359	10.12	257	15.87x11.87	403x301
HWK2016	20.50	521	16.50	419	18.12	460	14.12	359	19.87x15.87	505x403
HWK2020	20.50	521	20.50	521	18.12	460	18.12	460	19.87x19.87	505x505
HWK2420	24.50	622	20.50	521	22.12	562	18.12	460	23.87x19.87	606x505
HWK3024	30.50	775	24.50	622	28.12	714	22.12	562	29.87x23.87	759x606

Provides a clear view to components mounted inside an enclosure. The window is made of .21-inch thick polycarbonate. All mounting hardware is provided for easy installation. Gasketing along all edges maintains the Type 12 rating. Finished in ANSI 61 gray polyester powder. UL Listed.

Door Stops

Door Stop Kit

Catalog Number	Description
DSTOPK	Door stop kit

Door Stop Kits are intended for most Type 4, Type 4X, and Type 12 Single Door Wall-Mount Enclosures that have a minimum width of 16 inches. The kit is designed to mount at the top or bottom of the door opening. When properly installed the door can be held open approximately 135˚. Tools are not necessary to affix or release the stop. When not in use the assembly folds and locks neatly away. Each kit contains detailed mounting instructions and all the necessary hardware for field assembly.

Print Pockets

Print Pockets

Catalog Number	Length x Width	
	in.	mm
32170	6"x 6"	152x152
32171	10"x10"	254x254
32172	9"x12"	229x305

Print pockets provide a convenient place to store operation manuals, diagrams, or other documents inside the enclosure. Thermoplastic pockets are gray and have cut away areas for viewing contents. Pockets have adhesive backing for mounting inside on enclosure door.

Notes: Dimensions are in inches. Millimeters shown are for reference only. Data subject to change without notice.

Locks, Latches, Inserts, & Handles
Flush Locks
Illustration Sheet and Catalog Number

Discount Schedule: C2
Subclass: DS0

Type 1 Panel Enclosure Flush Lock

Type 1 Enclosure Flush Lock

Catalog Number	Description
T1EFL	New Flush lock

Flush Locks are used as a keyed locking mechanism for Type 1 small, medium and large Panel Enclosures. Mechanisms are steel with a plated finish.

Hole Pattern Detail

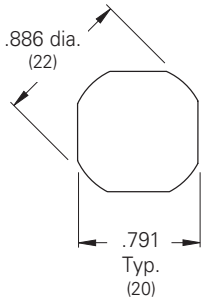

Type 4 & Type 12 JIC Enclosure Flush Lock

JIC 4 & 12 Flush Lock

Catalog Number	Description
25352 A	JIC 4 & 12 flush lock

Flush Locks are intended for 1-pt field modifications to most Type 4 and 12 JIC Enclosures as well as the Large Type 12 CHSC Enclosures. Included is detail instructions for the door hole size and location (see detail at right). The lock is steel with a bright plated finish.

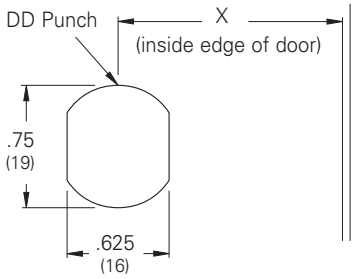

Hole Pattern Detail

X = 1.18 (30) JIC Enclosure
X = 1.68 (43) Large Type 12 CHSC Enclosure

Type 4 & 12 NEMA Enclosure Flush Locks

NEMA 4 & 12 Flush Lock

Catalog Number	Description
25351 A	NEMA 4 & 12 flush lock

Flush lock is intended for 1-pt field modification to most Type 4 and Type 12 Single Door Wall-Mount Enclosures. Included is detail instructions for the door hole size and location (see detail at right). The lock is steel with a bright plated finish.

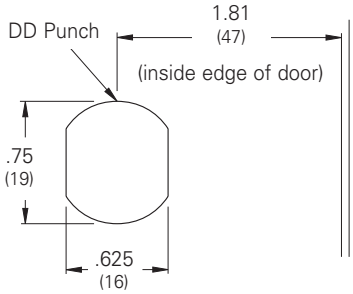

Hole Pattern Detail

Notes: Dimensions are in inches. Millimeters shown are for reference only. Data subject to change without notice.

Locks, Latches, Inserts, & Handles
Inserts
Illustration Sheet and Catalog Number

Discount Schedule: C2

Type 1 Panel Enclosure Security Inserts

7MT1TLK

7MT1SLK

3MT1DBLK

Type 1 Enclosure Security Latch Inserts

Catalog Number	Description
7MT1TLK	7mm triangular latch insert
7MT1SLK	7mm square latch insert
3MT1DBLK	3mm double bit latch insert

Security latch inserts interchange with slotted quarter-turn flush latch and provide security and control access to interior of enclosure. Inserts include matching key.

Type 4 Premier Enclosure Security Inserts

7MTLK

Type 4 Premierv Enclosure Security Latch Inserts

Catalog Number	Description
7MTLK	7mm triangular latch insert
7MSLK	7mm square latch insert
3MDBLK	3mm double bit latch insert

Security latch inserts interchange with slotted quarter-turn flush latch and provide security and control access to interior of enclosure. Inserts include matching key.

7MSLK

3MDBLK

Notes: Dimensions are in inches. Millimeters shown are for reference only. Data subject to change without notice.

Locks, Latches, Inserts, & Handles
Latches & Locks
Illustration Sheet and Catalog Number

Discount Schedule: C2
Subclass: DS0, 0A0 *

Type 4 & Type 12 Security Latch Kits

25270A

25278 A

25277A

25289A

25288A

Latch Kits for Type 4 & 12 Enclosures

Catalog Number	Description
25270 A	Slotted flush latch
25278 A	Triangle flush latch key
25277 A *	Triangle flush latch
25289 A *	Square flush latch key
25288 A	Square flush latch

A = Chrome Plate
Intended to be used on Type 4 and Type 12/13 enclosures which utilize external screw clamps. Latches require a hole punched or drilled in the door for installation. Once installed, an internal O-ring and external gasket maintain a dust-tight and water-tight seal. The tamper resistant latches require specific keys to gain access.

Type 1 Single-Door Telephone Cabinet Tumbler Locks

25092A

25092B

Type 1 Tel Cab Mechanism

Catalog Number	Description
25092 A	For right hand hinged single door cabinet
25092 B	For left hand hinged single door cabinet

Tumbler Locks are used as replacement mechanisms for Type 1 Single-Door Telephone Termination Cabinets. The low profile mechanism is excellent for surface and flush cabinet cover mounting.

Notes: Dimensions are in inches. Millimeters shown are for reference only. Data subject to change without notice.

Locks, Latches, Inserts, & Handles
Locks & Latches
Illustration Sheet and Catalog Number

Discount Schedule: C2
Subclass: DS0

Type 1 & Type 12 Quarter-Turn Enclosure Locks

T1KLBM & T12KLB

Type 1 & Type 12

Catalog Number	Description	Used With
T1KLBM	Type 1 - Small Locking - Black/Stainless Steel	JIC
T12KLB	Type 12 - Large Locking - Black/Stainless Steel	Ground Mount

Type 4 Quarter-Turn Enclosure Locks & Latches for JIC & Ground Mount

T4DLBM & T4LDLB

Type 4

Catalog Number	Description	Used With
T4DLBM	Type 4 - Small Slotted Latch - Black Fnish	JIC
T4LDLB	Type 4 - Large Slotted Latch - Black Fnish	Ground Mount

T4WNBM & T4WNB

Type 4

Catalog Number	Description	Used With
T4WNBM	Type 4 - Small Wing Knob - Black Fnish	JIC
T4WNB	Type 4 - Large Wing Knob - Black Fnish	Ground Mount

T4KLWNBM

Type 4

Catalog Number	Description	Used With
T4KLWNBM	Type 4 - Small Keylocking Wing Knob - Black Fnish	JIC

T4KLWNB

Type 4

Catalog Number	Description	Used With
T4KLWNB	Type 4 - Large Keylocking Wing Knob - Black Fnish	Ground Mount

T4PLWNB

Type 4

Catalog Number	Description	Used With
T4PLWNB	Type 4 - Large Padlockable Wing Knob - Black Fnish	Ground Mount

Notes: Dimensions are in inches. Millimeters shown are for reference only. Data subject to change without notice.

Locks, Latches, Inserts, & Handles
Locks, Latches, & Inserts
Illustration Sheet and Catalog Number

Discount Schedule: C2
Subclass: DS0

Type 4 Quarter-Turn Enclosure Locks, Latches, & Inserts

T4THB

Type 4

Catalog Number	Description	Used With
T4THB	Type 4 - Large T-Handle Non-Locking - Black Fnish	Ground Mount

T4KLTHB

Type 4

Catalog Number	Description	Used With
T4KLTHB	Type 4 - Large T-Handle Key-Locking - Black Fnish	Ground Mount

7MT4TLKB & 6.5MT4TLKBM

Type 4

Catalog Number	Description	Used With
7MT4TLKB	Type 4 - Large Security Insert (7mm Triangle) - Black Fnish	Ground Mount
6.5MT4TLKBM	Type 4 - Small Security Insert (6.5mm Triangle) - Black Fnish	JIC

7MT4SLKB & 6MT4SLKBM

Type 4

Catalog Number	Description	Used With
7MT4SLKB	Type 4 - Large Security Insert (7mm Square) - Black Fnish	Ground Mount
6MT4SLKBM	Type 4 - Small Security Insert (6mm Square) - Black Fnish	JIC

3MT4DBLKB

Type 4

Catalog Number	Description	Used With
3MT4DBLKB	Type 4 - Large Security Insert 3mm Double Bit) - Black Fnish	Ground Mount

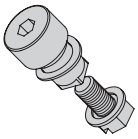
4MT4HXLKBM

Type 4

Catalog Number	Description	Used With
4MT4HXLKBM	Type 4 - Small Security Insert (4mm Socket Hex) - Black Fnish	JIC

Type 4X Quarter-Turn Enclosure Latch

T4XDLSSM & T4XLDLSS

Type 4X

Catalog Number	Description	Used With
T4XDLSSM	Type 4X - Small Slotted Latch - Stainless Steel	JIC
T4XLDLSS	Type 4X - Large Slotted Latch - Stainless Steel	Ground Mount

Notes: Dimensions are in inches. Millimeters shown are for reference only. Data subject to change without notice.

Locks, Latches, Inserts, & Handles
T-Handles
Illustration Sheet and Catalog Number

Type 3R Double-Door Enclosure Padlock Handle

Type 3R Padlock Handle

Catalog Number	Description
25350 A	Type 3R padlock handle

Type 3R Padlock Handle is intended to be used as a replacement mechanism for Type 3R Double-Door Enclosures. It is designed to fit existing 3-pt locking rod and cam assembly. The handle is steel with a bright plated finish.

Discount Schedule: C2
Subclass: DS0

Type 1 & 3R Double-Door Telephone Cabinet T-Handle Lock

Type 1 & 3R T-Handle Lock

Catalog Number	Description
25421 A	T-handle lock

T-Handle Lock is intended to be used as a replacement mechanism for Type 1 Double Door Telephone Termination Cabinets, Type 3R Telephone Termination Cabinets. The handle is designed to fit doors that hinge on either the left or right side. Cam and adjustable hardware can be rotated accordingly. The lock is steel with a bright plated finish.

Discount Schedule: C2
Subclass: AS0

Notes: Dimensions are in inches. Millimeters shown are for reference only. Data subject to change without notice.

Locks, Latches, Inserts, & Handles
Inserts
Illustration Sheet and Catalog Number

Type 4 & 12 Premier Enclosure Handle Inserts

Wall-Mount Handles

Padlocking, key-locking or non-locking handles are interchangeable with standard slotted quarter-turn flush latch on Premier series enclosures. Available keyed alike or keyed different, please specify when ordering.

Discount Schedule: C2
Subclass: TD0

Catalog Number	Description	Latch Type
WMHNL	Wall-mount handle, non-locking	Single point
WMHK-01	Wall-mount handle, key-locking - keyed 01	Single point
WMHK-02	Wall-mount handle, key-locking - keyed 02	Single point
WMHK-03	Wall-mount handle, key-locking - keyed 03	Single point
WMHK-04	Wall-mount handle, key-locking - keyed 04	Single point
WMHPTO	Wall-mount handle, padlockable	Single point
SD-KHB	Black die cast zinc, key-locking handle	3-point

WMHNL
non-locking

WMHK-01 thru WMHK-04
key-lockable

WMHPTO
padlockable

SD-KHB
key-lockable

Notes: Dimensions are in inches. Millimeters shown are for reference only. Data subject to change without notice.

Locks, Latches, Inserts, & Handles
Handles
Illustration Sheet and Catalog Number

Type 12 NEMA Single-Door Enclosure Padlock Handle Kits

Catalog Number	Description
25345 A	NEMA 12 - 1 pt padlocking

See hole pattern detail for field mounting the handle assembly. The handle is steel with a bright plated finish.

Discount Schedule: C2 Subclass: DS0

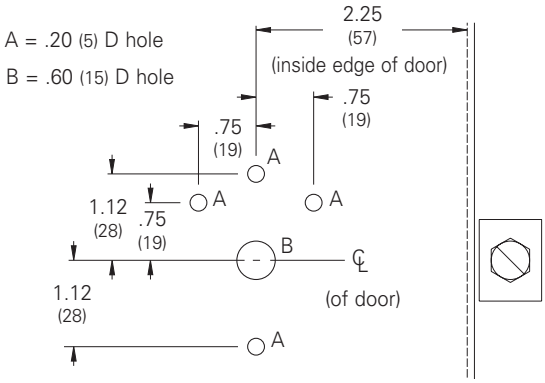

Hole Pattern Detail

Type 12 NEMA Single-Door Enclosure Padlock Handle Kits

Catalog Number	Description
25345 A**	NEMA 12 - 3 pt padlocking

** Specify enclosure height after the catalog number, (20, 24, 30, 36, 42, 48, 60, 72). Example: 25345 A48 for 48 inch height.

NEMA 12 Padlock Handle Kits are intended for 3-pt field modification to most Type 12 Single Door Wall-Mount Enclosures with a standard height from 20 inches (508 mm) to 72 inches (1829 mm). The handle is heavy-duty and will rotate in both the counter-clockwise and clockwise directions. Below handle center is a padlock provision with holes large enough to accommodate up to a .43 inch (11 mm) shaft. Kits include a handle, cam, rods, spacer, rollers, adjustable rod guides and all the hardware necessary for assembly. Adjustable rod guides have multiple settings for desired gasket compression. Detailed instructions are also furnished which include a door hole pattern for field mounting the handle assembly (see detail 2 on this page). The handle is steel with a bright plated finish.

Discount Schedule: C2 Subclass: DS0

Notes: Dimensions are in inches. Millimeters shown are for reference only. Data subject to change without notice.

Locks, Latches, Inserts, & Handles
Handles
Illustration Sheet and Catalog Number

Type 12 Console Handle Kits

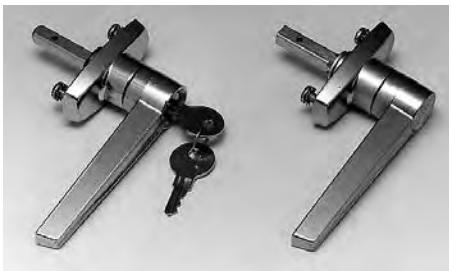

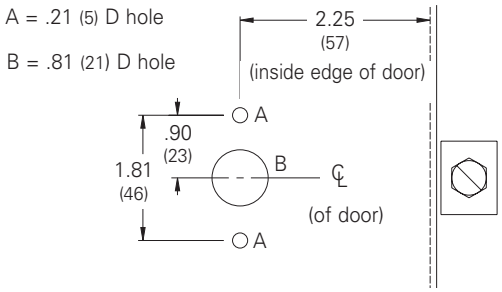

Hole Pattern Detail

Catalog Number	Description
25228 A	Type 12 handle CCW lock
25228 B	Type 12 handle CCW latch
25228 C	Type 12 handle CW lock
25228 D	Type 12 handle CW latch

Type 12 Door Handles can be used as a replacement lock or latch for Type 12 Consoles. These enclosures use a clockwise (CW) handle rotation, counter-clockwise (CCW) lock and latch are available. Handles are steel with a bright plated finish.

See hole pattern detail for field mounting the handle assembly. Handles are steel with a bright plated finish.

Discount Schedule: C2 Subclass: DS0

Padlocking Defeater Handle Kit

Catalog Number	Description
BD-PDHB	Type 4 - 1 pt padlocking defeater

These door handles can be used as replacement locks for Type 12 ground mounted disconnect enclosures featuring a beveled door. Handles are a zinc die-cast construction with a textured powder coat finish to provide durability and corrosion resistance. An optional built in spring loaded defeater provides a two handed operation requirement and a standard padlockable hangle trigger provides secondary security. Handles are supplied with nut and gasketing materials.

Discount Schedule: C2
Subclass: DS0

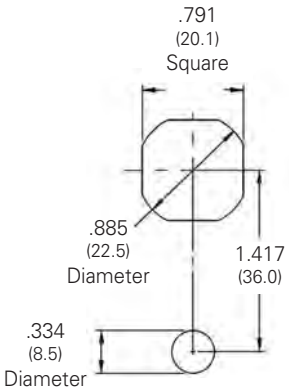

Hole Pattern Detail

Notes: Dimensions are in inches. Millimeters shown are for reference only. Data subject to change without notice.

Locks, Latches, Inserts, & Handles
Handles
Illustration Sheet and Catalog Number

Padlocking Keylocking Handle Kit

Catalog Number	Description
BD-PKHB	Type 4X - 1 pt padlocking keylocking

These door handles can be used as replacement locks for Type 12, Type 4 and Type 4X ground mounted enclosures featuring a beveled door. Handles are a zinc die-cast construction with a textured powder coat finish to provide durability and corrosion resistance. A key-lock and padlockable hangle trigger provides secondary security. Handles are supplied with nut and gasketing materials and keys.

Discount Schedule: C2
Subclass: DS0

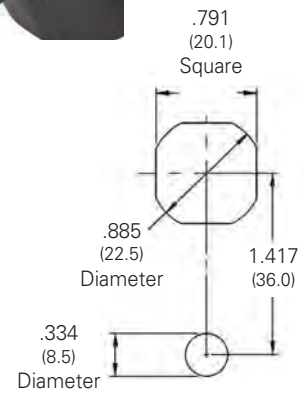

Hole Pattern Detail

Padlocking Keylocking Handle Kit

Catalog Number	Description
BD-PKHSS	Type 4X - 1 pt padlocking keylocking

These door handles can be used as replacement locks for Type 4X ground mounted 316SS enclosures featuring a beveled door. Handles are a die-cast stainless steel construction to provide durability and corrosion resistance. A key-lock and padlockable hangle trigger provides secondary security.
Handles are supplied with nut and gasketing materials and keys.

Discount Schedule: C2
Subclass: DS0

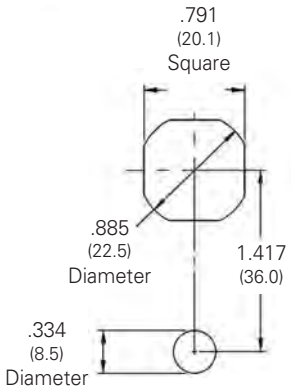

Hole Pattern Detail

Notes: Dimensions are in inches. Millimeters shown are for reference only. Data subject to change without notice.

Clamp & Padlock Kits
Padlock Kit
Illustration Sheet and Catalog Number

JIC Padlock Kit

JIC Padlock Kit

Catalog Number	Description
PLKJICSS6	Padlock Kit Type 316 Stainless Steel

The JIC Padlock Kit is designed to field install on all JIC type and Larger Type 12 CHSC Enclosures. Mounting hardware and instruction are provided.

Discount Schedule: C2
Subclass: D10

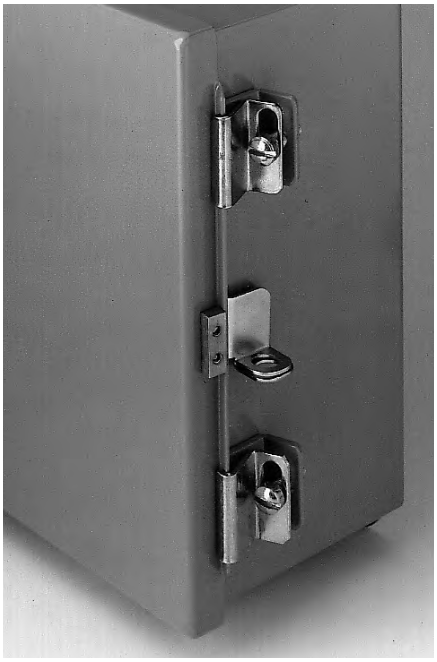

Clamp & Padlock Kits
Clamps
Illustration Sheet and Catalog Number

Discount Schedule: C2
Subclass: DS0

Type 12 JIC Cover Clamp Kit

JIC 12 Cover Clamp Kit

Catalog Number	Description	Quantity
J12CK2	Cover clamp kit	1 Kit

This kit is intended as replacement clamp parts on all JIC Type 12 hinge cover and clamp cover devices. Clamps will also fit NEMA 12 Feed-Through Wireway and NEMA 12 Wiring Trough. Each kit contains two each - plated steel cover clamps and plated screws.
1/4" hardware.

Type 4X/4 JIC Cover Clamp Kit

JIC 4 & 4X Cover Clamp Kit

Catalog Number	Description	Quantity
J4XCK2	Cover clamp kit	1 Kit

This kit is intended as replacement clamp parts on all JIC Type 4X and JIC Type 4 Wall-Mount and Floor-Standing Enclosures. Each kit contains two each - stainless steel cover clamps stainless steel screws.
1/4" hardware.

Type 4X/4/12 JIC Fast-Access Clamp Kit

JIC Fast-Access Clamp Kit

Catalog Number	Description	Quantity
L23	Fast-clamp, steel	1
L23SS	Fast-clamp, stainless	1

This kit is intended to be used in place of standard JIC cover clamps to provide quick access into an enclosure. Clamps will fit JIC Type 4X, 4 and 12 hinge and clamp cover enclosures. They will also replace the clamps used on NEMA 12 and 4X Feed-Through Wireway and NEMA 12 and 4X Wiring Trough. These clamps will **not** fit the JIC screw or quick-release cover designs. Each kit includes washers for fitting between the enclosure bracket and the fast-access clamp to control gasket compression. Kits are available in plated steel (Type 12 Enclosures) and stainless steel (Type 4X & 4 Enclosures). UL Listed.

Notes: Dimensions are in inches. Millimeters shown are for reference only. Data subject to change without notice.

Clamp & Padlock Kits
Clamps
Illustration Sheet and Catalog Number

Discount Schedule: C2
Subclass: DS0

Type 12 NEMA Cover Clamp Kit

Type 12 Door Clamp Kit

Catalog Number	Description	Quantity
N12CK2	Door clamp kit	1 Kit

This kit is intended as replacement clamp parts on Type 12 Single Door Wall-Mount Enclosures. Each kit contains two each - door clamps, screws, springs and washers. The clamps, screws and washers are plated steel, the springs are stainless steel.
1/4" hardware.

Type 4X/4 NEMA Cover Clamp Kit

Type 4 & 4X Door Clamp Kit

Catalog Number	Description	Quantity
N4XCK2	Door clamp kit	1 Kit

This kit is intended as replacement clamp parts on Type 4X and Type 4 Wall-Mount and Floor Standing Enclosures. Each kit contains two each - door clamps, screws, springs and washers. All clamp parts and hardware are stainless steel.
1/4" hardware.

Type 4X/4/12 NEMA Fast-Access Clamp Kit

NEMA Fast-Access Clamp Kit

Catalog Number	Description	Quantity
FC412SS	Fast-clamp, stainless steel	1 Kit

This kit is intended to be used in place of standard NEMA door clamps to provide quick access into an enclosure. Clamps will fit Type 4X, 4 and 12 Single Door Wall-Mount Enclosures. They will also replace the clamps used on Type 4X and Type 4 Floor Standing Enclosures. Each kit contains two each - door clamps, fast access screw fasteners, springs and washers. Gasket compression is controlled by turning the handle in or out of the bracket. UL Listed.

Notes: Dimensions are in inches. Millimeters shown are for reference only. Data subject to change without notice.

Bolt-On Accessories

Illustration Sheet and Catalog Number

Discount Schedule: C2
Subclass: DS0

Folding Shelf Kit

Folding Shelf Kit

Catalog Number	Description
FSHELF12	12 x 12 Flat mounting surface
FSHELF18	18 x 18 Flat mounting surface

The folding shelf is intended to mount inside or outside of enclosure to support components, sensitive instruments and other equipment which may be integral to the enclosure. When properly installed the shelf will fold open into a locked position perpendicular to the mounting surface. When not in use, the shelf folds down into a locked position. The Folding Shelf is constructed from heavy gauge steel and has a white polyester powder paint finish.

Gland Plates

Catalog Number	Gland Plate Detail				Enclosure Cut-Out	
	A		B			
	in.	mm	in.	mm	in.	mm
GP610	6.00	152	10.00	254	5.00x9.00	127x229
GP618	6.00	152	18.00	457	5.00x17.00	127x432

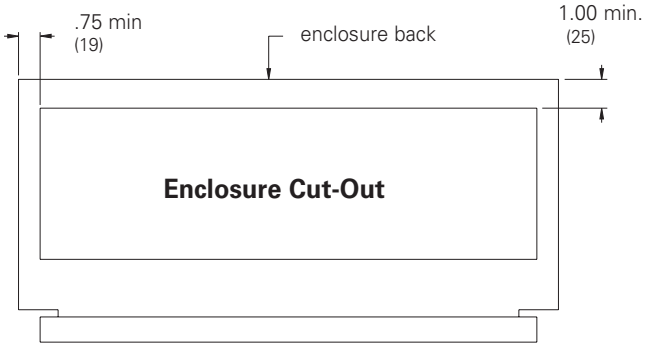

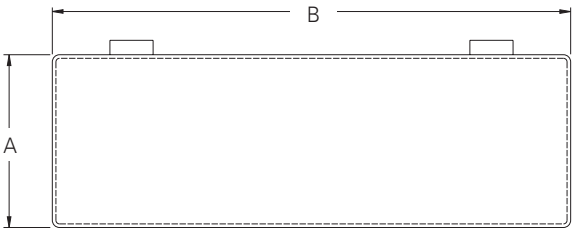

Intended for use with Type 12 Enclosures and is an excellent means of providing a removable access plate to an enclosure and still maintain its listing. The Gland Plate is constructed from (16) gauge steel and has ANSI 61 gray polyester powder finish. Fastening is done from the inside of the enclosure to prevent tampering. Hardware and instructions are included with the kit. UL Listed.

Notes: Dimensions are in inches. Millimeters shown are for reference only. Data subject to change without notice.

Bolt-On Accessories

Illustration Sheet and Catalog Number

Discount Schedule: C2
Subclass: DS0

Floor Stand Kit

Steel

Stainless

Floor Stand Kits

Catalog Number		A		B		C	
Steel	Stainless	in.	mm	in.	mm	in.	mm
MFK8	MFK8XS	8.0	203	6.06	154	—	—
MFK10	MFK10XS	10.0	254	8.06	205	—	—
MFK12	MFK12XS	12.0	305	10.06	256	—	—
MFK16	MFK16XS	16.0	406	14.06	357	—	—
MFK18	MFK18XS	18.0	457	16.06	408	7.00	178
MFK20	MFK20XS	20.0	508	18.06	459	8.00	203
MFK24	MFK24XS	24.0	610	22.06	560	10.00	254

Floor Stand Kits are intended for use with Type 4X, Type 4 and Type 12 Wall-Mount Enclosures where floor support is required. They are easily installed on most enclosures where the width is 20 inches (508 mm) or more. The enclosure mounting feet need not be removed in order to install Floor Stand Kits. Each kit consists of two (10) gauge legs and hardware for mounting. At the base of each leg is a prepunched plate (see drawing). Steel kits have a gray polyester powder paint finish. Stainless steel kits are fabricated from 304 alloy. Standard Floor Stand Kits are 12 inches (305 mm) high. For special heights or non-standard construction consult the factory.

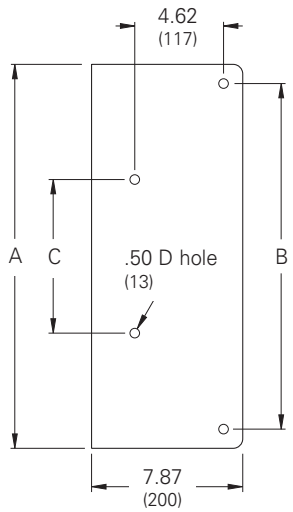

Base 20 - 24 Deep

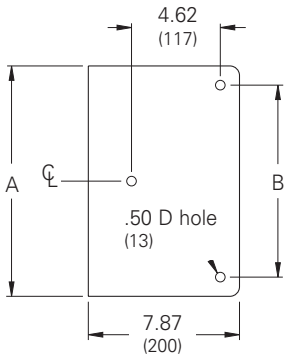

Base 8 - 16 Deep

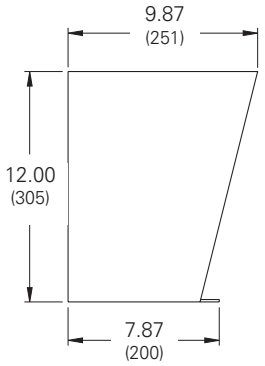

Floor Stand Kit

Enclosure Stabilizer

Enclosure Stabilizer

Catalog Number	Quantity
ES2	2

Enclosure Stabilizers are heavy gauge with a wide base for use with NEMA Floor Stand Kits which add stability to large enclosures or top heavy enclosures. Two thumb screws thread into the offset piece and secure the stabilizer to the base of the leg. Two stabilizers are furnished. They are finished with a bright caution orange enamel paint.

Notes: Dimensions are in inches. Millimeters shown are for reference only. Data subject to change without notice.

Bolt-On Accessories

Illustration Sheet and Catalog Number

Louver Plate Kits

Excellent for providing ventilation in enclosures where external conditions or internal components may cause excessive amount of heat or moisture. Designed to be used with B-Line series Filter Kits using the same cut-out and mounting hole configurations. Louver Plate Kits include all of the necessary hardware and instructions for field installation. Plates are constructed from 16 gauge steel and have an ANSI 61 gray polyester powder finish.

Discount Schedule: C2
Subclass: DS0

Louver Plate Kit	Louver Plate Size								Louver Plate Detail					Enclosure Cut-Out				Area Opening
	A		B		C		D		E		Depth		Quantity	Height		Width		
Catalog Number	in.	mm	in.	mm	in.	mm	in.	mm	in.	mm	in.	mm		in.	mm	in.	mm	(sq.in.)
LPK23	3.25	83	3.25	83	2.50	64	2.50	64	2.00	51	.25	6	3	2.12	54	2.12	54	1.10
LPK33	3.87	98	4.50	114	3.12	79	3.75	95	3.00	76	.25	6	3	2.50	64	3.12	79	1.68
LPK34	4.75	121	4.50	114	4.00	102	3.75	95	3.00	76	.25	6	4	3.37	86	3.12	79	2.20
LPK43	4.50	114	5.50	140	3.75	95	4.75	121	4.25	121	.25	6	3	3.00	76	4.12	105	2.30
LPK44	5.62	143	5.50	140	4.87	124	4.75	121	4.25	121	.25	6	4	4.00	102	4.12	105	3.10
LPK64	5.62	143	7.50	191	4.87	124	6.75	171	5.50	140	.25	6	4	4.25	121	6.12	155	4.10
LPK66	7.87	200	7.50	191	7.12	181	6.75	171	5.50	140	.25	6	6	6.50	165	6.12	155	6.10
LPK84	5.81	148	10.50	267	5.06	129	8.75	222	4.25	108	.25	6	8	4.25	121	8.12	206	6.30
LPK86	8.19	208	10.50	267	7.44	189	8.75	222	4.25	108	.25	6	12	6.50	165	8.12	206	9.50
LPK88	10.56	268	10.50	267	9.81	249	8.75	222	4.25	108	.25	6	16	8.75	222	8.12	206	12.70
LPK812	15.31	389	10.50	267	14.56	370	8.75	222	4.25	108	.25	6	24	13.25	337	8.12	206	19.00

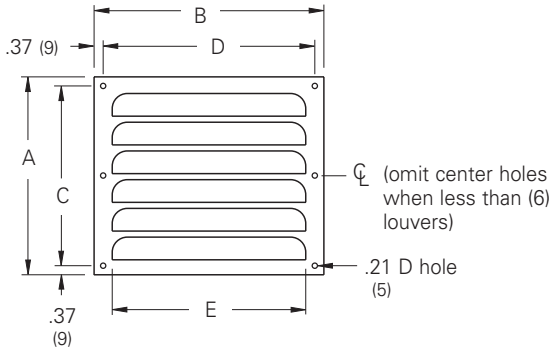

LPK23 to LPK66
Typical

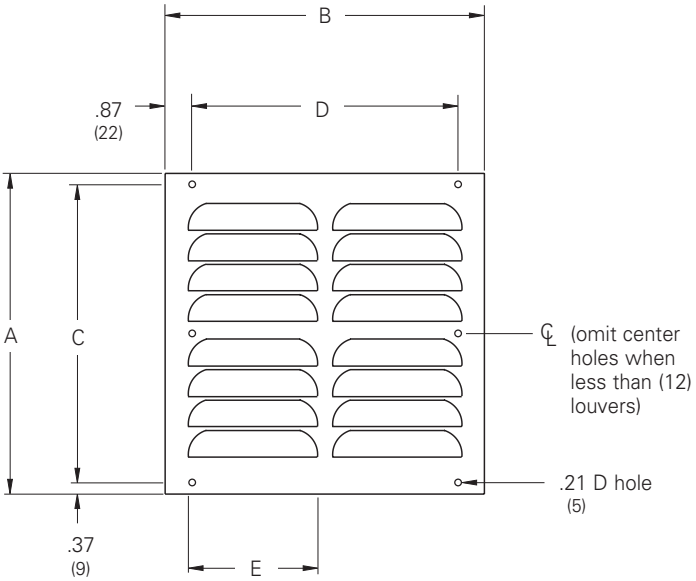

LPK84 to LPK812
Typical

Notes: Dimensions are in inches. Millimeters shown are for reference only. Data subject to change without notice.

Bolt-On Accessories

Illustration Sheet and Catalog Number

Discount Schedule: C2
Subclass: DS0

Filters & Filter Adhesive

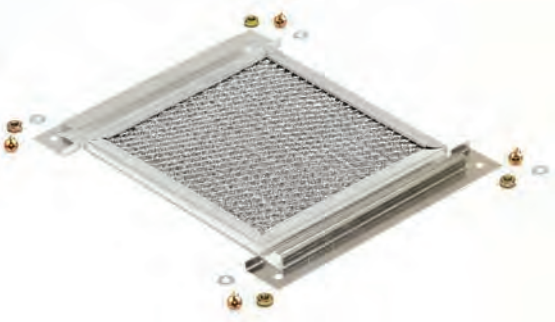

Designed for use with Louver Plate Kits. The Filter mounts securely inside of the enclosure using the brackets and hardware furnished with the kit. The Filter is comprised of finely woven aluminum strips which offers protection against airborne dust and dirt. Periodic washing with warm water is needed to keep the Filter clean.

Filters

Filter Catalog Number	Used with Louver Plate Catalog Number
FLT33	LPK33
FLT34	LPK34
FLT43	LPK43
FLT44	LPK44
FLT64	LPK64
FLT66	LPK66
FLT84	LPK84
FLT86	LPK86
FLT88	LPK88
FLT812	LPK812

Filter Adhesive

DISCONTINUED

Filter Adhesive

Catalog Number	Description
FAS-412	14 oz. Aerosol Spray

Use the filter adhesive to help increase efficiency of air filters. The adhesive spray helps trap small particles that normally pass through the filter and helps protect the elements within.

Notes: Dimensions are in inches. Millimeters shown are for reference only. Data subject to change without notice.

Bolt-On Accessories

Illustration Sheet and Catalog Number

Discount Schedule: C2
Subclass: DS0

Baffle Plates

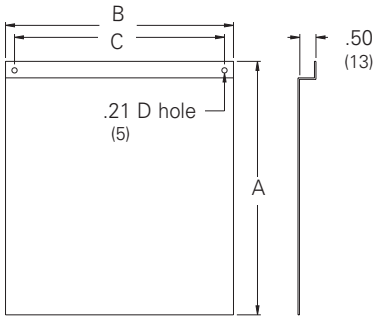

Baffle Plates

Baffle Plate Catalog Number	A in.	A mm	B in.	B mm	C in.	C mm	Used with Louver Plate Catalog Number
BP23	3.25	83	3.25	83	2.50	64	LKP23
BP33	3.87	98	4.50	114	3.75	95	LPK33
BP34	4.75	121	4.50	114	3.75	95	LPK34
BP43	4.50	114	5.50	140	4.75	121	LPK43
BP44	5.62	143	5.50	140	4.75	121	LPK44
BP64	5.12	130	7.50	191	6.75	171	LPK64
BP66	7.37	187	7.50	191	6.75	171	LPK66
BP84	5.31	135	9.50	241	8.75	222	LPK84
BP86	7.68	195	9.50	241	8.75	222	LPK86
BP88	10.06	256	9.50	241	8.75	222	LPK88
BP812	14.81	376	9.50	241	8.75	222	LPK812

Baffle Plates are intended to be used with Louver Plates when it is necessary to prevent direct access into the enclosure through the louver opening. The plate is designed to mount to the inside of the enclosure using the same cut-out and mounting holes required to mount the Louver Plate Kit. Plates are (16) gauge steel and have an ANSI 61 gray polyester powder finish. UL Listed.

Hole Seals

Painted Steel - U.L. listed as Type 3R, 12, 13, & 4

Stainless Steel - U.L. listed as Type 4X

Oil-Tight Hole Seals

Catalog Number Steel	Catalog Number Stainless	Application	Max. Hole Diameter in.	Max. Hole Diameter mm	Hole Seal Diameter in.	Hole Seal Diameter mm
SPBG	SPBGSS	Miniature oil-tight pushbutton holes	0.88	22	1.22	31
SPB	SPBSS	Standard oil-tight pushbutton holes	1.25	32	1.75	44
S050	S050SS	1/2-inch conduit holes	.88	22	1.38	35
S075	S075SS	3/4-inch conduit holes	1.06	27	1.56	40
S100	S100SS	1-inch conduit holes	1.38	35	1.88	48
S125	S125SS	1 1/4-inch conduit holes	1.69	43	2.19	56
S150	S150SS	1 1/2-inch conduit holes	2.00	51	2.50	64
S200	S200SS	2-inch conduit holes	2.50	64	3.00	76
S250	S250SS	2 1/2-inch conduit holes	3.00	76	3.50	89
S300	S300SS	3-inch conduit holes	3.62	92	4.12	105
S350	S350SS	3 1/2-inch conduit hole	4.12	105	4.62	117
S400	S400SS	4-inch conduit holes	4.62	117	5.12	130

Protects knockout openings and extra pushbutton or conduit openings from dirt, oil, dust and water. Each hole seal has oil-resistant gasketing and plated stud and wing nut. Available in steel finished with ANSI 61 polyester powder or unpainted stainless steel.

Notes: Dimensions are in inches. Millimeters shown are for reference only. Data subject to change without notice.

Bolt-On Accessories

Illustration Sheet and Catalog Number

Discount Schedule: C2
Subclass: DS0

Drip Shields

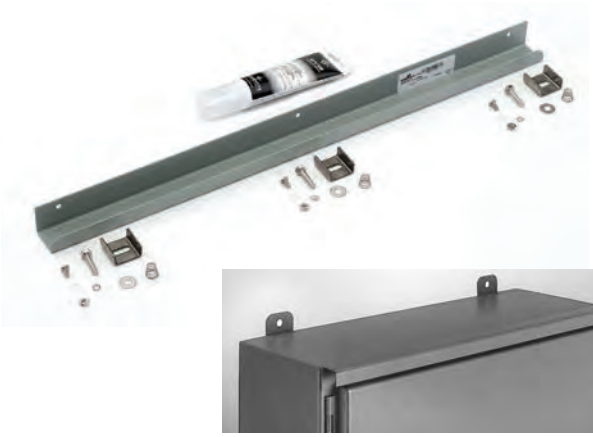

NEMA 12 Drip Shield Kits

Catalog Number	Fits Enclosure
DK12A	12.00 inch wide
DK16A	16.00 inch wide
DK20A	20.00 inch wide
DK24A	24.00 inch wide
DK30A	30.00 inch wide
DK36A	36.00 inch wide

The NEMA 12 Drip Shield Kit is intended for use with Type 12 Single Door Wall-Mount Enclosures. It offers protection to the door and hardware from dripping water and falling dust. The drip shield is constructed from (14) gauge steel and has an ANSI 61 gray polyester powder finish. It attaches to the enclosure front, above the door. The kit includes a drip shield, stainless steel clamps, hardware and sealing compound. UL Listed

NEMA 4X Drip Shield Kits

Catalog Number	Fits Enclosure
DK12SS	12.00 inch wide
DK16SS	16.00 inch wide
DK20SS	20.00 inch wide
DK24SS	24.00 inch wide
DK30SS	30.00 inch wide
DK36SS	36.00 inch wide

The NEMA 4X Drip Shield Kit is intended for use with Type 4X and Type 4 Single Door Wall-Mount Enclosures. It offers protection to the door and hardware from dripping water and falling dust. The drip shield is constructed from (14) gauge steel and has a fine brushed finish. The shield attaches to the enclosure top front. The kit includes a drip shield, stainless steel hardware, and sealing compound. UL Listed.

Casters

Casters for Series AW-9 and AW-14 Consoles

Catalog Number	Description	Mounting plate size (front to back)
4700-CC	Set of 4 casters, 2 mounting plates and hardware	16"
4700-CC2	Set of 4 casters, 2 mounting plates and hardware	19"

Each set contains 2 swivel casters and two stationary casters. Composition rubber wheel is self-lubricating and has a soft rubber tread with a hard rubber core. Each swivel wheel has a side brake. Each caster has a 200 pound load capacity.

Notes: Dimensions are in inches. Millimeters shown are for reference only. Data subject to change without notice.

Bolt-On Accessories

Illustration Sheet and Catalog Number

Barrier

Barrier/Shelf Kits are intended for use with Type 1 and Type 3R Telephone Termination Cabinets. Barrier/Shelf kits can also be used with other types of enclosure designs provided the enclosure dimensions are large enough to fit the Barrier/Shelf (see table). The flanged lip design creates a ridged barrier construction or a shelf for containing and storing spare fuses and other components. Each kit includes all the necessary hardware for field installation. The Barrier/Shelf is constructed from (16) gauge steel and has an ANSI 61 gray polyester powder finish.

Barrier/Shelf Kit	A		B		Fits Enclosure (and larger) Length x Depth	
Catalog Number	in.	mm	in.	mm	in.	mm
BK412	3.87	98	11.75	298	12.00x4.00	305x102
BK415	3.87	98	14.75	375	15.00x4.00	381x102
BK418	3.87	98	17.75	450	18.00x4.00	457x102
BK424	3.87	98	23.75	603	24.00x4.00	610x102
BK430	3.87	98	29.75	756	30.00x4.00	762x102
BK436	3.87	98	35.75	908	36.00x4.00	914x102
BK448	3.87	98	47.75	1213	48.00x4.00	1219x102
BK612	5.87	149	11.75	298	12.00x6.00	305x152
BK615	5.87	149	14.75	375	15.00x6.00	381x152
BK618	5.87	149	17.75	450	18.00x6.00	457x152
BK624	5.87	149	23.75	603	24.00x6.00	610x152
BK630	5.87	149	29.75	756	30.00x6.00	762x152
BK636	5.87	149	35.75	908	36.00x6.00	914x152
BK648	5.87	149	47.75	1213	48.00x6.00	1219x152

Discount Schedule: C2
Subclass: AQ0

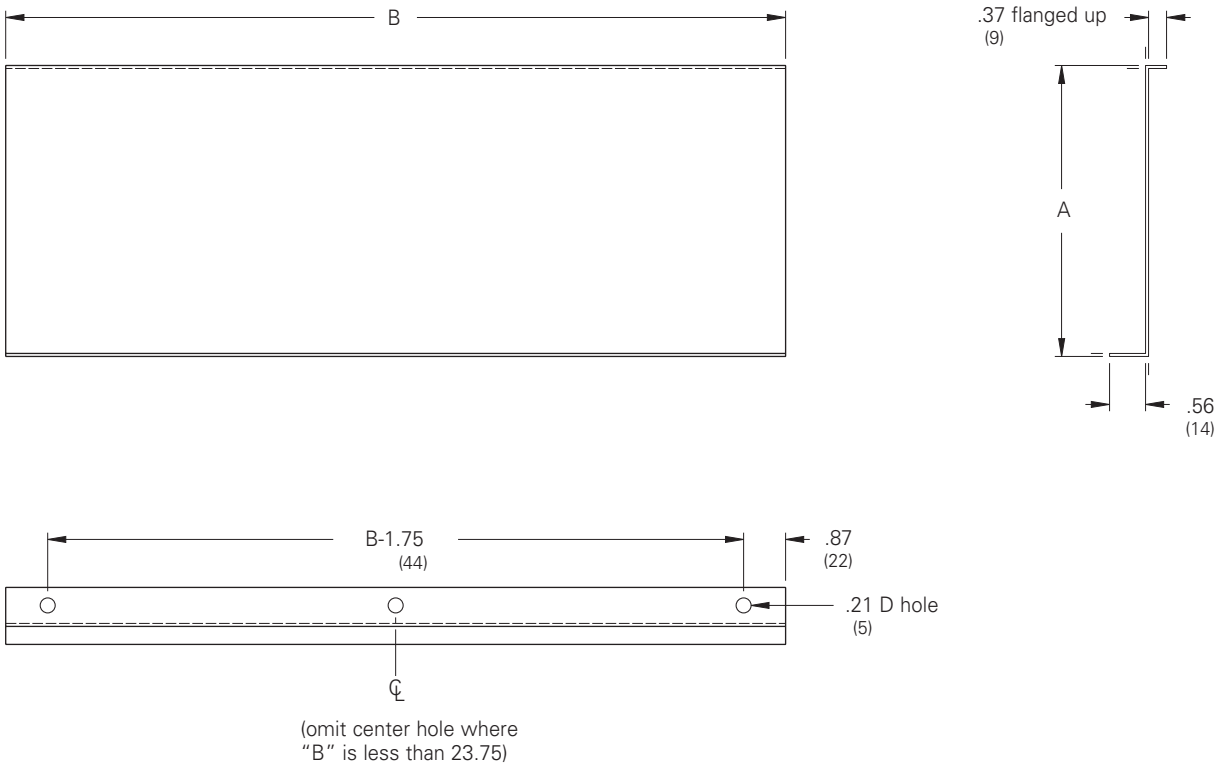

Notes: Dimensions are in inches. Millimeters shown are for reference only. Data subject to change without notice.

Bolt-On Accessories
Illustration Sheet and Catalog Number

Component Mounting Device

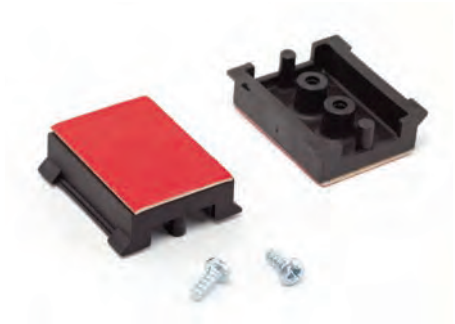

Component Mounting Device

Catalog Number	Description
ECMD1	Small mounting aid

The Component Mounting Device is a small mounting aid especially designed to make mounting of small 35 mm DIN rail mountable components easier. It can be used whenever the installation of a 35 mm DIN rail is impractical, or when there is not enough space left in an enclosure. Because of its industrial grade self-adhesive it can be installed much easier and quicker than a conventional DIN rail, without hole drilling and screw mounting. B-Line's component mounting device can hold components up to 1.1 lbs in weight. The initial adhesive power is 40%. After 24 hours, it has its full holding power of 1.1 lbs. ECMD1 can also be screw mounted if a more secure mounting is desired or if the surface is rough. All that is necessary to install our ECMD1 is a smooth and clean surface. Sold in packages of five (5).

Discount Schedule: C2
Subclass: TH0

Technical Data

Application:	Direct attachment of small components and 35 mm DIN rails, EN 50022
Capacity:	0.44 lb. (200 g) initially 1.1 lb (500 g) after 24 hour waiting period
Mounting Surface:	All smooth surfaces, (e.g. metals, laquered surfaces, plastics other than polyethylene, polypropylene and rubber). Mounting surface must be dry and free from dust, oil, separating agents and other contamination.
Dimensions:	1.7x1.5x0.55" (43x38x14 mm)
Hole pattern:	0.5" distance, Δ 0.14" (12.8 mm; Δ 3.6 mm)
Material:	polyamide (rated UL 94V-0) with non-deteriorating high-performance adhesive
Temperature range:	-22° to +131°F (-30° to +55°C)
Included:	mounting screw for perforated 35 mm DIN rail, EN 50022

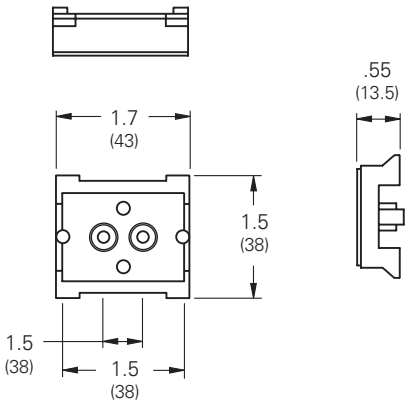

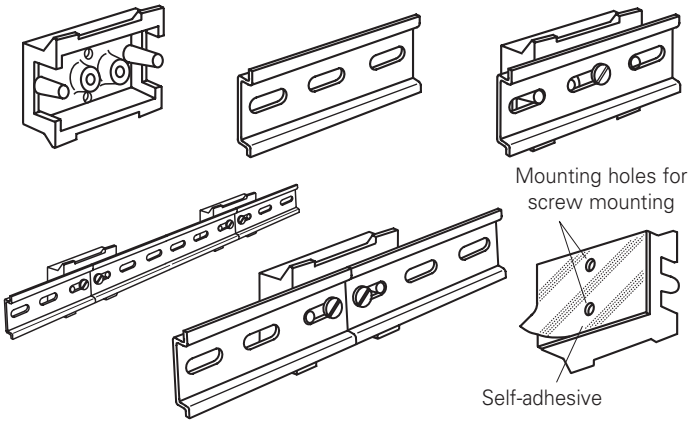

CE

Notes: Dimensions are in inches. Millimeters shown are for reference only. Data subject to change without notice.

Electrical Accessories
Terminal Block Kits
Illustration Sheet and Catalog Number

JIC Terminal Strap Kit

JIC Terminal Strap Kits fit all styles and types of JIC enclosures. The kits are furnished with flat straps for mounting Flat Based Terminal Blocks, (see Flat Based Terminal Blocks, page 445). There is adequate space on each terminal strap should the user wish to provide another style of block. Terminal straps are made from (10) gauge steel with an electrogalvanized finish. They are fastened to channel clamping nuts which allows them to adjust along the width of the channel bracket assembly. Extra Strap Kits can be ordered separately and come furnished with all hardware necessary for channel mounting.

Discount Schedule: C2
Subclass: DS0

Terminal Strap Kit Catalog Number	A in.	A mm	B in.	B mm	C in.	C mm	D in.	D mm	Quantity Of Straps	Fits Enclosure Height x Width in.	Fits Enclosure Height x Width mm	Extra Strap Kit Catalog Number
86TS	6.25	159	4.25	108	1.12	28	4.50	114	2	8.00x6.00	203x152	**8TS**
108TS	8.25	210	6.25	159	1.12	28	6.50	165	2	10.00x8.00	254x203	**10TS**
1210TS	10.25	260	8.25	210	2.43	62	8.50	216	3	12.00x10.00	305x254	**12TS**
1212TS	10.25	260	10.25	260	2.43	62	10.50	267	3	12.00x12.00	305x305	**12TS**
1412TS	12.25	311	10.25	260	2.43	62	10.50	267	3	14.00x12.00	356x305	**14TS**
1614TS	14.25	362	12.25	311	2.43	62	12.50	318	4	16.00x14.00	406x356	**16TS**

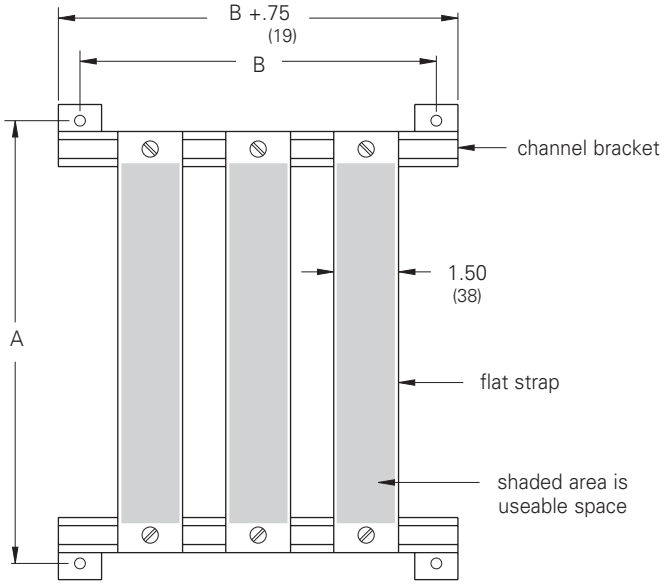

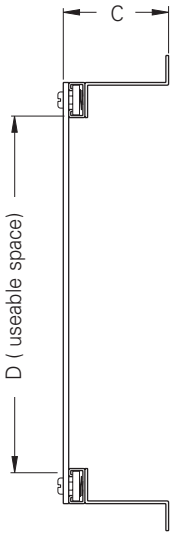

Notes: Dimensions are in inches. Millimeters shown are for reference only. Data subject to change without notice.

Electrical Accessories
Terminal Block Kits
Illustration Sheet and Catalog Number

JIC Terminal Block Strip Kit

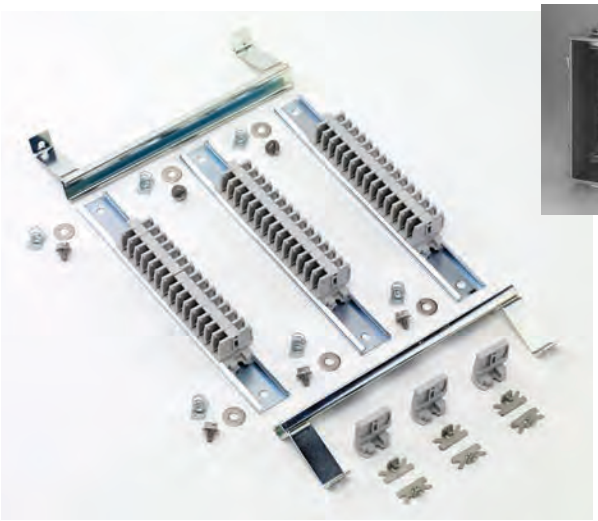

JIC Terminal Block Strip Kits fit all styles and types of JIC Enclosures. Kits are furnished with Terminal Strips and contain Medium-Duty Channel Mount Terminal Blocks, Terminal End and Clamps. Terminals have tubular screw type lugs which accept wire sizes from #18 through #8. Terminal Strips are fastened to channel nuts which allow them to adjust along the entire width of the channel bracket assembly. Extra Strip Kits can be ordered separately. They come furnished with all the hardware necessary for channel mounting but do not include the terminal blocks. Terminal blocks, ends, and clamps can be ordered separately as well, (see Channel Mount Terminal Blocks, page 444).

Discount Schedule: C2
Subclass: DS0

Terminal Strap Kit Catalog Number	A in.	A mm	B in.	B mm	C in.	C mm	D in.	D mm	Quantity Of Straps	Fits Enclosure Height x Width in.	Fits Enclosure Height x Width mm	Extra Strap Kit Catalog Number
86TB	6.25	159	4.25	108	2.15	55	4.50	114	2	8.00x6.00	203x152	8TB
108TB	8.25	210	6.25	159	2.15	55	6.50	165	2	10.00x8.00	254x203	10TB
1210TB	10.25	260	8.25	210	3.56	90	8.50	216	3	12.00x10.00	305x254	12TB
1412TB	12.25	311	10.25	260	3.56	90	10.50	267	3	14.00x12.00	356x305	14TB
1614TB	14.25	362	12.25	311	3.56	90	12.50	318	4	16.00x14.00	406x356	16TB

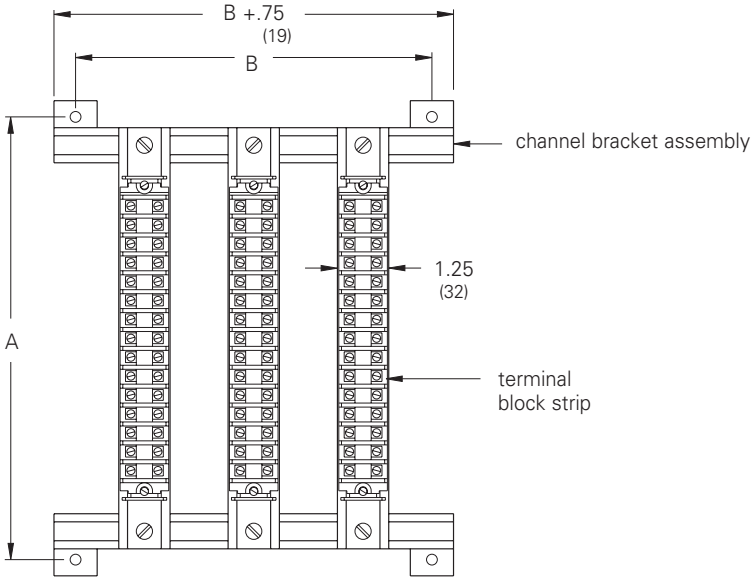

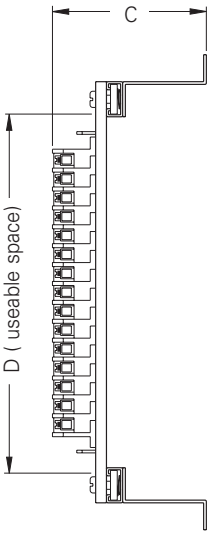

Notes: Dimensions are in inches. Millimeters shown are for reference only. Data subject to change without notice.

Electrical Accessories
Terminal Block Kits
Illustration Sheet and Catalog Number

NEMA Terminal Strap Kits

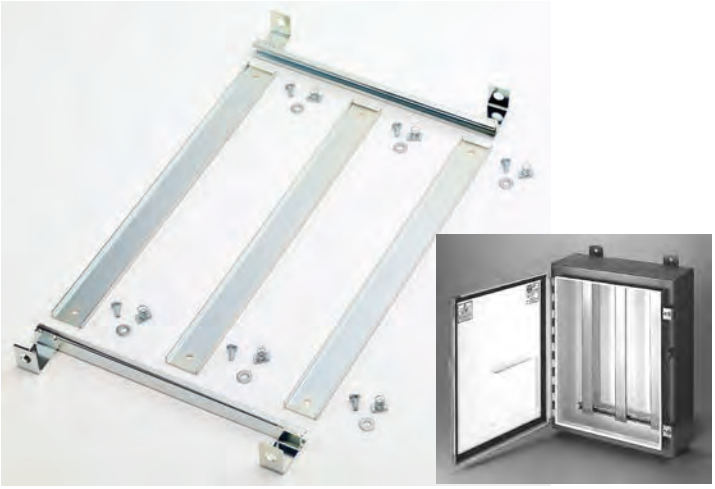

NEMA Terminal Strap Kits fit Type 4, Type 4X and Type 12 Enclosures. Kits are furnished with flanged straps for mounting Flat Base Terminal Blocks, (See Flat Base Terminal Blocks, page 445). There is adequate space on each terminal strap should the user wish to provide another style block. Terminal straps are (14) gauge steel with an electrogalvanized finish. They are fastened to channel nuts which allow them to adjust along the width of the channel bracket assembly. Three channel brackets are supplied with kits that fit enclosures that are 36 inches wide. Extra Strap Kits can be ordered separately and come furnished with all hardware necessary for channel mounting.

Discount Schedule: C2
Subclass: DS0

Terminal Strap Kit Catalog Number	A in.	A mm	B in.	B mm	C in.	C mm	D in.	D mm	Quantity of Straps	Fits Enclosure Height x Width in.	Fits Enclosure Height x Width mm	Extra Strap Kit Catalog Number
16TS12	11.25	286	7.25	184	2.18	55	11.75	298	2	16.00x12.00	406x305	16S
20TS16	15.25	387	11.25	286	2.18	55	15.75	400	3	20.00x16.00	508x406	20S
20TS20	15.25	387	15.25	387	2.18	55	15.75	400	4	20.00x20.00	508x508	20S
24TS20	19.25	489	15.25	387	2.18	55	19.75	502	4	24.00x20.00	610x508	24S
24TS24	19.25	489	19.25	489	2.18	55	19.75	502	5	24.00x24.00	610x610	24S
30TS20	25.25	641	15.25	387	2.18	55	25.75	654	4	30.00x20.00	762x508	30S
30TS24	25.25	641	19.25	489	2.18	55	25.75	654	5	30.00x24.00	762x610	30S
36TS24	31.25	794	19.25	489	2.18	55	31.75	806	5	36.00x24.00	914x610	36S
36TS30	31.25	794	25.25	641	2.18	55	31.75	806	6	36.00x30.00	914x762	36S
42TS30	37.25	946	25.25	641	2.18	55	37.75	959	6	42.00x30.00	1067x762	42S
48TS36	43.25	1099	31.25	794	2.18	55	43.75	1111	7	48.00x36.00	1219x914	48S
60TS36	55.25	1403	31.25	794	2.18	55	55.75	1416	7	60.00x36.00	1524x914	60S

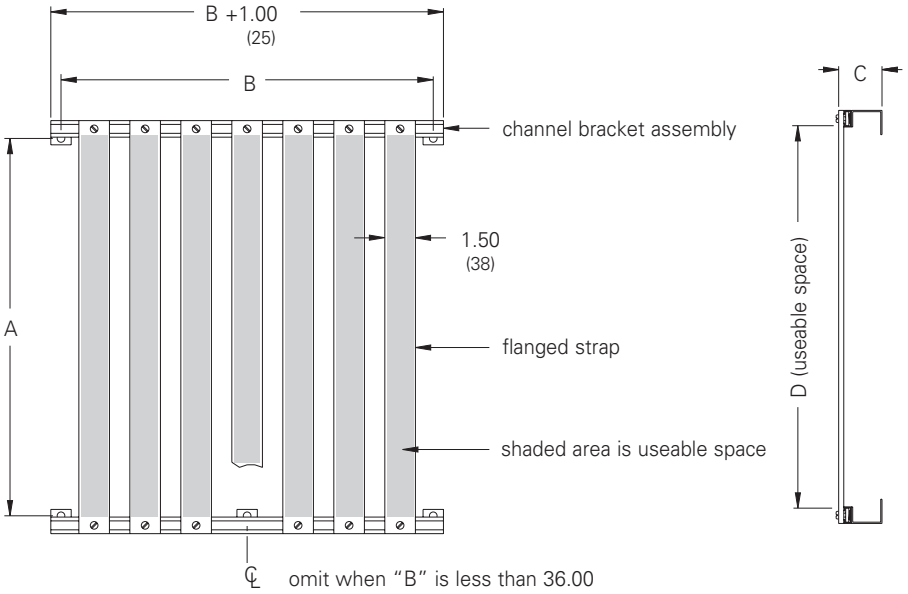

Notes: Dimensions are in inches. Millimeters shown are for reference only. Data subject to change without notice.

Electrical Accessories
Terminal Block Kits
Illustration Sheet and Catalog Number

Discount Schedule: C2
Subclass: DS0

Channel Mounted Terminal Blocks

Medium-Duty Channel Mount terminal blocks are rated at 600 VAC, 50 Amps. Terminal lugs are plated copper and have tubular screw contacts. Terminal wire range is from #22 through #8 AWG. Each terminal block top has a painted marking area intended for circuit designation. These blocks are designed to dovetail into channel and can be stacked in combination with both Medium-Duty and/or Heavy-Duty Channel Mount type terminals. One Channel Mount Terminal End and two Channel Clamps are required to terminate a stack of blocks (order separately).

CTB3005

CTE3001

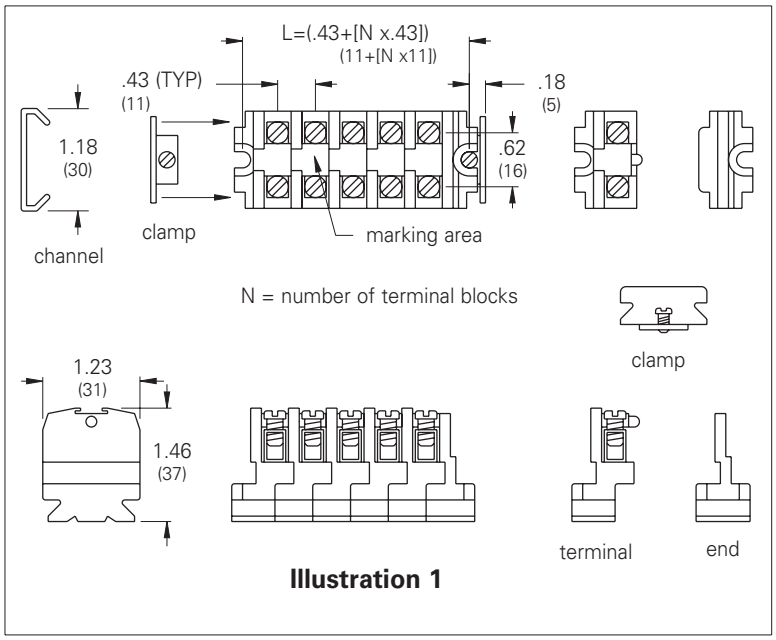

Illustration 1

Heavy-Duty Channel Mount terminal blocks are rated at 600 VAC, 90 Amps. Terminal lugs are plated copper and have tubular screw contacts. Terminal wire range is from #18 through #4 AWG. Each terminal block top has a painted marking area intended for circuit designation. These blocks are designed to dovetail into channel and can be stacked in combination with both Heavy-Duty and/or Medium-Duty Channel Mount type terminals. One Channel Mount Terminal End and two Channel Clamps are required to terminate a stack of blocks (order separately).

CT6005

CE6001

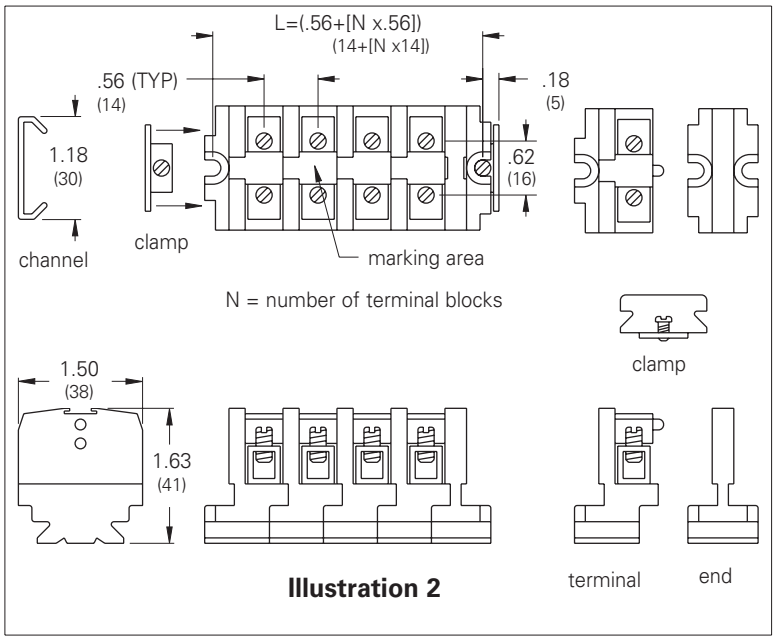

Illustration 2

CTC2

25012A

Catalog Number	Description	Illustration	Quantity
CTB3005	Medium-duty channel mount terminal	1	5
CTE3001	Medium-duty channel mount end	1	1
CT6005	Heavy-duty channel mount terminal	2	5
CE6001	Heavy-duty channel mount end	2	1
CTC2	Channel mount terminal clamp	1 & 2	2
25012A	Channel Strip (72 inch)	1 & 2	1

Notes: Dimensions are in inches. Millimeters shown are for reference only. Data subject to change without notice.

Electrical Accessories
Terminal Block Kits
Illustration Sheet and Catalog Number

Discount Schedule: C2
Subclass: DS0

Flat Base Terminal Blocks

Medium-Duty Flat Base type terminal blocks are rated at 600 VAC, 50 Amps. Terminal lugs are plated copper and have tubular screw contacts. Terminal wire range is from #22 through #8 AWG. Each terminal block top has a painted marking area intended for circuit designation. These blocks are designed to stack in combination with both Medium-Duty and/or Heavy-Duty Channel Mount type terminals. One Flat Based Terminal End and hardware is required to terminate a stack of blocks (order separately).

FTB3005

FTE3001

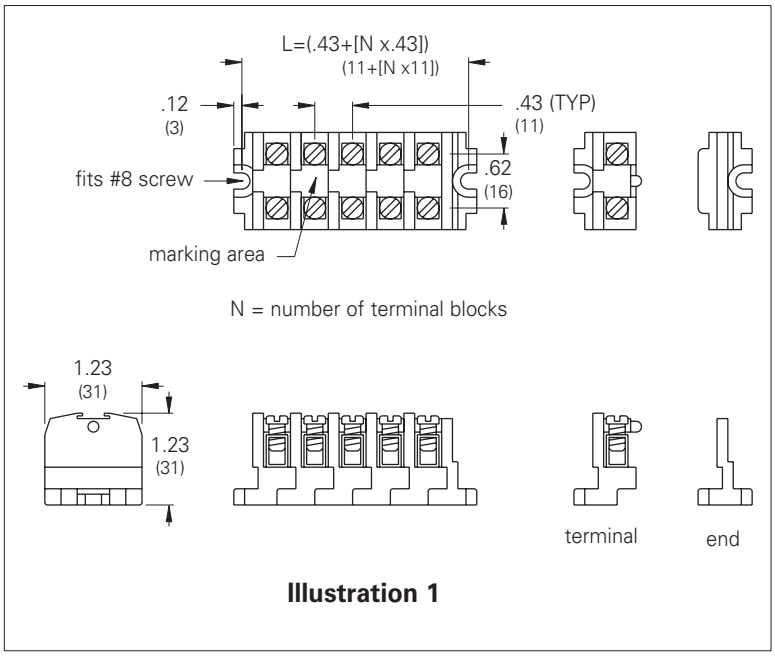

Illustration 1

Heavy-Duty Flat Base terminal blocks are rated at 600 VAC, 90 Amps. Terminal lugs are plated copper and have tubular screw contacts. Terminal wire range is from #18 through #4 AWG. Each terminal block top has a painted marking area intended for circuit designation. These blocks are designed to stack in combination with both Heavy-Duty and/ or Medium-Duty Flat Base type terminals. One Flat Base Terminal End and hardware is required to terminate a stack of blocks (order separately).

FT6005

FE6001

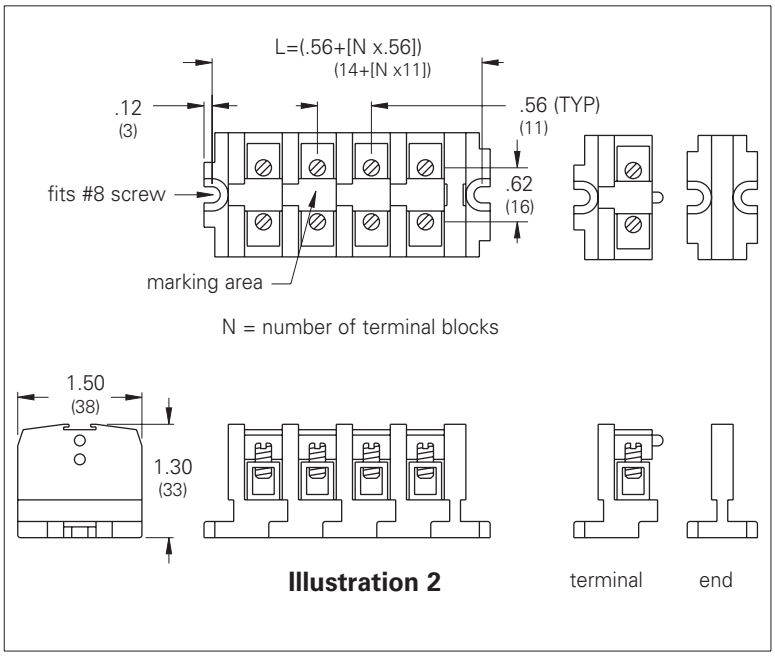

Illustration 2

Catalog Number	Description	Illustration	Quantity
FTB3005	Medium-duty flat base terminal	1	5
FTE3001	Medium-duty flat end, (includes #8 screws)	1	1
FT6005	Heavy-duty flat base terminal	2	5
FE6001	Heavy-duty flat end, (incudes #8 screws)	2	1

Notes: Dimensions are in inches. Millimeters shown are for reference only. Data subject to change without notice.

Electrical Accessories
Terminal Strap Support & Lights
Illustration Sheet and Catalog Number

Terminal Strap Support

Terminal Strap Support Kit

Catalog Number	Description
TSK	Two support brackets

This kit is intended for supporting the Terminal Straps and Strips off the back of panels or enclosure walls. The "Z" shaped brackets are made from (12) gauge steel and have a white enamel paint finish. Two brackets and hardware are furnished with each kit. Terminal Straps and Strips must be purchased separately.

Discount Schedule: C2
Subclass: DS0

Electrical Accessories
Enclosure Lights
Illustration Sheet and Catalog Number

Discount Schedule: C2
Subclass: DS0

DISCONTINUED

ELS25-120 ELMS25-120

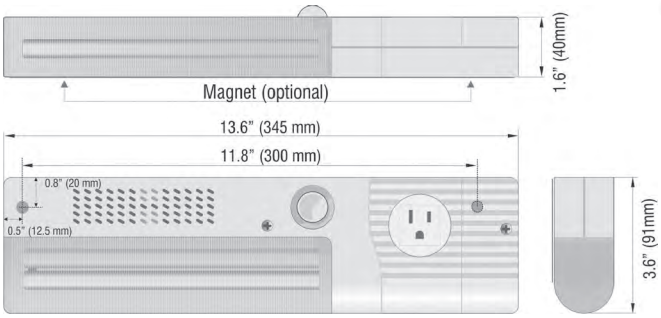

Enclosure Lights

Catalog Number	Description
ELS25-120	Enclosure Light with on/off switch
ELMS25-120	Enclosure Light with motion sensor

The ELS25 light was designed to fit in tight spaces in enclosures. It features an optional integrated receptacle so that electrical devices (e.g. power tools) can be easily plugged in when needed. The standard light can be screw mounted in a variety of positions. The motion sensor version was designed to eliminate the need for a door switch.

- Also available in magnet mount models.

Technical Data

Operating voltage:	110-120V/50-60 Hz
Lamp type:	Compact fluorescent light bulb
Power consumption:	11 W (~75W incand.), Base: 2G7, electronic ballast
Light intensity:	900 Lm
Lamp life:	5,000 hours
Switch:	On/off switch (for light only)
Motion sensor:	PIR = Passive Infrared (see note)
Receptacle:	US/Canada, 120 VAC, 15A max.
Connection:	3 pole screw terminal for AWG 14 max. (2.5 mm²) (includes cable strain relief)
Mounting:	M5 screws (not included), 11.8" (300mm) hole distance
Dimensions:	Length 13.6" (l345m) x Width 3.6" (91mm) x Depth 1.6" (40mm)
Housing:	Plastic UL94V-0
Weight:	0.9 lbs. (0.4 kg) - 1.3 lbs. (0.6 kg) with magnet
Protection Type:	IP 20
Agency Approvals:	VDE, UL

Note: A passive infrared (PIR) motion sensor detects the motion of the enclosure door being opened and automatically turns on the light. The sensor is factory pre-set to turn the light off 5 minutes after all motion ceases. The motion sensor does not detect movement through glass or fiberglass, thus allowing installation in enclosure with glass doors.

Notes: Dimensions are in inches. Millimeters shown are for reference only. Data subject to change without notice.

Electrical Accessories
LED 025 Enclosure Lights
Illustration Sheet and Catalog Number

Discount Schedule: C2
Subclass: DS0

LED 025 light with on/off switch and screw mount

Enclosure Lights with Input Connector Included

Part No. screw mount	Operating voltage	Description
BL02540.0-01-0003	AC 100-240 V, 50/60 Hz (min. AC 90 V, max. AC 265 V)	starter on/off switch with power input connector
BL02540.0-01	AC 100-240 V, 50/60 Hz (min. AC 90 V, max. AC 265 V)	add-on on/off switch for daisy chaining
BL02541.0-01-0003	AC 100-240 V, 50/60 Hz (min. AC 90 V, max. AC 265 V)	starter PIR motion sensor[1] with power input connector
BL02541.0-01	AC 100-240 V, 50/60 Hz (min. AC 90 V, max. AC 265 V)	add-on PIR motion sensor[1] for daisy chaining

[1] Passive Infrared (PIR) motion sensor is factory pre-set to turn the light off 6 minutes after all motion ceases

On/off switch light

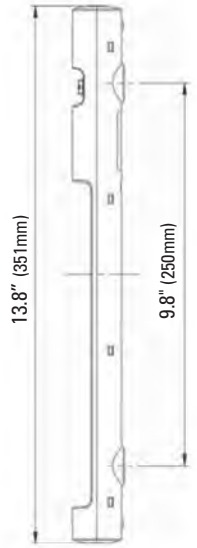

Other options:
- Available in magnet and clip mount models
- Available in DC models

Technical Data

Power consumption	max. 5 W (~ 75 W incandescent bulb)
Luminosity	400 Lm at 120° (1200 Lm at 360° or equivalent 95W light bulb)
Lamp type	LED, 120° angle of radiation light color - daylight, color temperature - 6,500 K
Service life	60,000 hrs. at 68 °F (20 °C)
Connection	2-pole plug with snap lock; AC: max. 2.5 A / AC 240 V, white connector; DC: max. 2.5 A / DC 60 V, blue connector
Housing	plastic, transparent
Mounting	magnet, M5 screws (not included), or clip (M6 screws) torque 2 Nm max.
Operating temperature	-22°F to +140 °F (-30°C to +60 °C)
Storage temperature	-40°F to +185 °F (-40°C to +85 °C)
Dimensions	see drawings
Protection type/Protection class	IP20 / II (double insulated)
Accessories	input connector (P/N: BL264057) and output connector (P/N: BL264058) cable for supply)P/N: BL244357) or cable for daisy chain (P/N: BL244359)
Approvals	UL File No. E234324, VDE, GOST-R

Screw mount end view

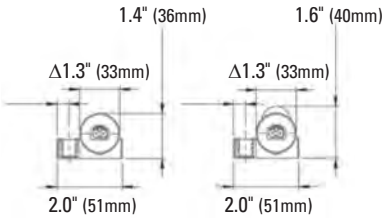

Notes: Dimensions are in inches. Millimeters shown are for reference only. Data subject to change without notice.

Electrical Accessories
Interlocks
Illustration Sheet and Catalog Number

Discount Schedule: C2
Subclass: DS0

Electrical Interlocks

Catalog Number	Description	Volts/Hz
BAEK115NDH	Electrical Interlock	120/60

The BAEK115NDH is designed to be used with standard B-Line series enclosures that have no handles. This interlock requires drilling several holes in the cover and the body for mounting.

Electrical Interlock Defeater

Catalog Number	Description
BAEKDF	Defeater

This defeater is key operated and enables personnel to enter an enclosure while the enclosures internal components are energized. Turning the key disengages the circuit to the electrical interlock.

Notes: Dimensions are in inches. Millimeters shown are for reference only. Data subject to change without notice.

Door Switch

Illustration Sheet and Catalog Number

Discount Schedule: C2
Subclass: DS0

Part Number	Switch Type	Suitable Wire
BL01350.0-00	Change Over (CO)	Round cable, stranded wire AWG 18 to 17 (with wire end ferrule)
BL01351.0-00	Normally Closed (NC)	Round cable, stranded wire AWG 18 to 16 (with wire end ferrule)

The door switch monitors the position of cabinet doors and is available in three versions. For example, it can be used for switching a light when opening a door (NC). The version with change over contact (CO) can be used as a normally closed and/or normally open contact. The wide mechanical adjustment range of the door switch offers versatile mounting; the housing is adjustable within a 1 3/8" (35mm) range, while the screw flange with a slotted hole offers an additional 13/16" (21mm). The travel of the switch is another 5/16" (8mm).

Technical Data

Maximum Switching Capacity	10A resistive / 1.5A inductive @ AC 250V
Service Life	VDE: > 10,000 cycles UL: > 6,000 cycles
Connection	4-pole clamp with strain relief, clamping torque 0.5 Nm maximum
Housing	plastic according to UL 94V-0, gray/black
Mounting	MS screws (not included)
Mounting Position	variable
Operating / Storage temperature	-4°F to +185°F (-20°C to +85°C)
Operating / Storage humidity	maximum 90% RH (non-condensing)
Dimensions	3.4" x 2.5" x 1.2" (87mm x 64mm x 30mm)
Weight	approximately 1.8 oz. (50g)
Protection Type	IP20
Approvals	UL & VDE intended

Dimensional Drawings

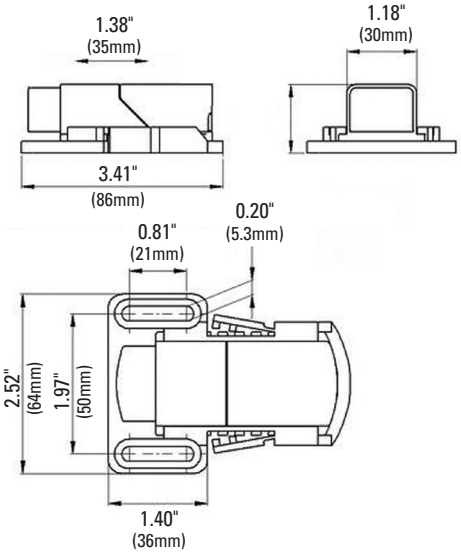

Wiring Diagrams

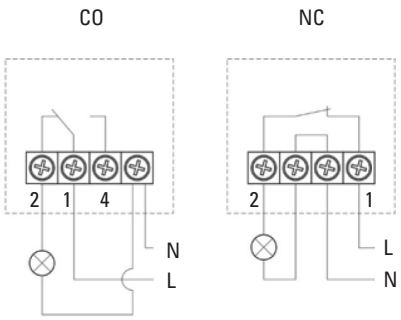

Notes: Dimensions are in inches. Millimeters shown are for reference only. Data subject to change without notice.

Electrical Accessories
Receptacles
Illustration Sheet and Catalog Number

Discount Schedule: C2
Subclass: TH0

Receptacles for Enclosures

Catalog Number	Description
ER1	USA/Canada
ER2	Germany
ER3	France/Benelux
ER4	Switzerland
ER5	Great Britain/Ireland

Provide a safe and convenient method for adding a receptacle/outlet inside electrical enclosures.

Technical Data

Maximum ratings:	15 amps @125 VAC
Mounting:	Clip for 35 mm DIN rail, EN 50022
Connection:	3xAWG14 max. (2.5 mm)
Dimensions:	3.6x2.4x1.9" (92x62x48 mm)

USA/Canada

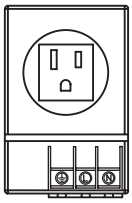

Germany

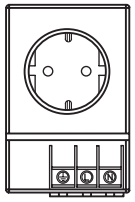

France

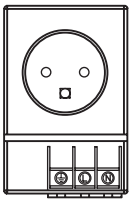

Switzerland

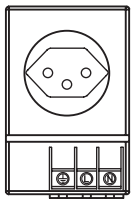

GB

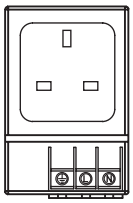

CE

Notes: Dimensions are in inches. Millimeters shown are for reference only. Data subject to change without notice.

Columns & Bases

Illustration Sheet and Catalog Number

AC-44ACOL
shown

AC-44COL
shown

Construction

- Columns are fabricated from (14) gauge steel and provide rigid support of mounted equipment
- Flanges are (10) gauge steel
- All continuous welded seams are finished smooth
- External and internal edges are rounded to prevent injury or damage to cables
- Column has a gasketed access plate
- Kit consisting of a box connector, gasket and hardware is furnished
- Top flange of angle column type is at a 60˚ angle to the floor
- Bases have hole pattern suitable for any size or type column
- Floor mounting holes and leveling screws provided with each base

Finish

- Wash and phosphate undercoat
- ANSI 61 gray polyester powder finish

Standards

- Conforms to NEMA standard for Type 13 and Type 12

Application

- Enable floor mounting of various types of enclosures.
- Designed to support enclosures at a 60˚ angle to the floor

Discount Schedule: C2
Subclass: DR0

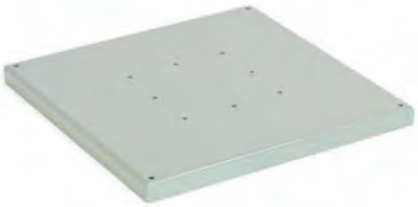

AC-1818BASE
shown

Columns

Catalog Number	Type	Column Size A x B Width x Depth in.	mm	Access Opening Height x Width in.	mm
AC-44COL	Straight	4.00x4.00	102x102	6.00x2.75	152x70
AC-44ACOL	Angled	4.00x4.00	102x102	6.00x2.75	152x70
AC-66COL	Straight	6.00x6.00	152x152	6.75x4.75	171x121
AC-66ACOL	Angled	6.00x6.00	152x152	6.75x4.75	171x121

Bases

Catalog Number	Base Size A x B Width in.	Depth mm	C in.	D mm
AC-1818BASE	18.00x18.00	457x457	17.00x17.00	432x432
AC-2424BASE	24.00x24.00	610x610	23.00x23.00	584x584

Notes: Dimensions are in inches. Millimeters shown are for reference only. Data subject to change without notice.

Columns & Bases

Illustration Sheet and Catalog Number

Flange Detail

4.00 x 4.00

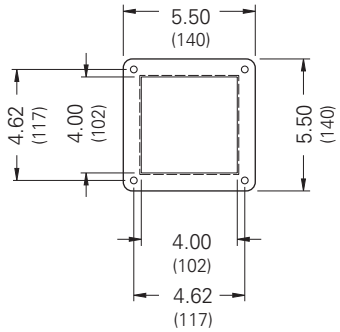

Top Flange

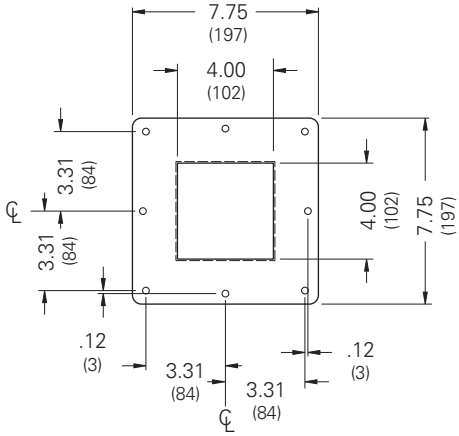

Bottom Flange

6.00 x 6.00

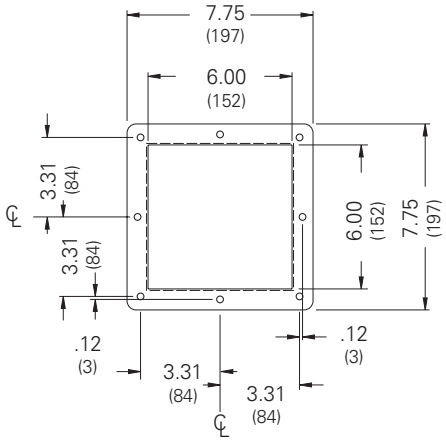

Top & Bottom Flange

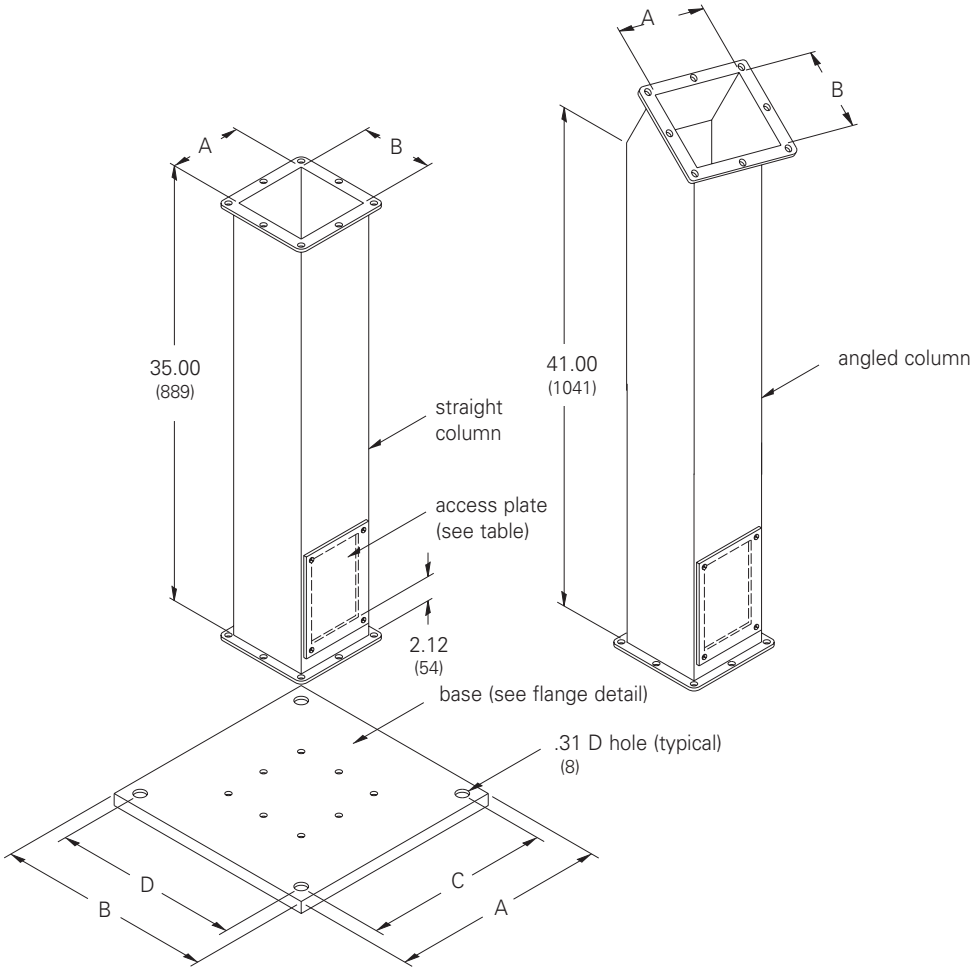

Notes: Flange holes are .28 D. Flange radii are .37 R.
Dimensions are in inches. Millimeters shown are for reference only. Data subject to change without notice.

Disconnect Accessories

Illustration Sheet and Catalog Number

Discount Schedule: C2
Subclass: DS0

Operator Adapter Kits

AP-CH shown

Operator Adapter Kits

Catalog Number ANSI 61 Painted	Stainless	Brand and Type of Operator
AP-ABFD	**AP-ABFD SS**	Allen-Bradley† 1494F and 1494D
AP-ABV	**AP-ABV SS**	Allen-Bradley† 1494V or 1494U
AP-CH	**AP-CH SS**	Cutler-Hammer† C361, C371/ABB Controls
AP-GE	**AP-GE SS**	General Electric† STDA
AP-ITE	**AP-ITE SS**	I-T-E Max-Flex†
AP-SD	**AP-SD SS**	Square D† Class 9422, (variable depth only)
AP-WAMT	**AP-WAMT SS**	Westinghouse† AMT (below handle) and Flex Shaft™

† Marks are the property of their respective owners.

Intended for use on all B-Line series disconnect enclosures with universal cutouts. Adapter kits are required to install a disconnect in B-Line series enclosures with universal mounts. Each kit contains an adapter plate and all parts used to interlock the disconnect operating mechanism with the master door. Installation instructions are included in each kit.

Blank Adapter Plates

Blank Adapter Plates

Catalog Number ANSI 61 Painted	Description Stainless	
7.5 BAP	—	Wall-mounted Enclosures
10.5 BAP	**10.5 BAP SS**	Floor and Free-Standing Enclosures

Blank Adapter Plates are designed to cover the cut-outs in either the flange or center post on Disconnect Enclosures when the disconnect switch is not installed. Plates are constructed from 12 gauge steel. Each kit contains two plates, gasket, and hardware. The kit is designed to sandwich the gasket between the enclosure opening and exterior plate. The exterior plate has either an ANSI 61 gray enamel paint or stainless steel finish, the interior plate has a white enamel paint finish.

Notes: Dimensions are in inches. Millimeters shown are for reference only. Data subject to change without notice.

Hardware
Illustration Sheet and Catalog Number

Hardware Packages

Hardware Packages

Catalog Number	Description	Typical Use	Quantity
10168	#8-32 x .375 inch self tapping steel screw	Perforated panels	20
10169	#10-32 screw	JIC 12 & 14, small 3R & 1 panel mtg	4
10240 A	#10-32 stainless screw	JIC 4X panel mtg	4
10242 A	.375-16 stainless flange nut	NEMA 4X panel mtg	4
10242 B	.375-16 stainless flange nut	NEMA 4X panel mtg	6
10242 C	.375-16 stainless flange nut	NEMA 4X panel mtg	8
10242 D	.375-16 stainless flange nut	NEMA 4X panel mtg	10
10243 A	.375-16 flange nut	NEMA 12 & 4, large 3R panel mtg	4
10243 B	.375-16 flange nut	NEMA 12 & 4, large 3R panel mtg	6
10243 C	.375-16 flange nut	NEMA 12 & 4, large 3R panel mtg	8
10243 D	.375-16 flange nut	NEMA 12 & 4, large 3R panel mtg	10
10108 A	Formed hinge and screw	RTHC cover mtg	2
10118 A	#10-32 gasketed screw	WPSC cover mtg	10
10129 A	Oval head screw, cupped washer	Type 1 telephone cabinet cover mtg	10
10119 A	#10-32 retaining screw & washer	JIC-SC, consolet, console, pushbutton cover mtg	10
10166 A	#10-32 x .50 inch steel screw	Miscellaneous cover mtg	20
10167 A	#10-32 x .50 inch stainless screw	MIscellaneous cover mtg	20
29645	#10-32 ground screw	Type 1 Junction Boxes	1
29646	#10-32 square flat screw	Screw Covers	2
79903873369	2 PC #10-32 DPTF SQ DR HW KIT		1
79903873370	#10-32 TF GROUND HARDWARE KIT		1

A variety of Hardware Packages intended to be used as replacement hardware parts for the different styles and types of B-Line series enclosures. For more information or for availability of other replacement parts consult the factory.

Discount Schedule: C2
Subclass: DS0

Hardware
Illustration Sheet and Catalog Number

Ground Lug Kits

10184A

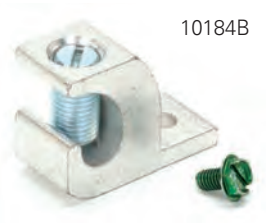
10184B

10184C

Ground Lug Kits

Catalog Number	Wire Range	Fastener
10184 A	#6-#14 AWG CU/AL	#10-32
10184 B	1/0-#14 AWG CU/AL	#10-32
10184 C	250MCM-1/0 CU/AL	.25-20

Ground Lug Kits are intended to provide a means for equipment grounding for most enclosures. Lug sizes 1/0 and above have a "J" shaped design to lay-in wire and cable. The fastener is colored green to meet NEC standards for grounding devices.

Grounding Devices

GLK2

GS88

Grounding Device

Catalog Number	Description	Approximate Wire Size	Length Between Ring Terminals in.	Length Between Ring Terminals mm	Ring Terminal For Stud Diameter in.	Ring Terminal For Stud Diameter mm
GLK2	Grounding Kit	-	-	-	-	-
GS88	Grounding Strap	#8	8.00	203	.250	6
GS816	Grounding Strap	#8	16.00	406	.250	6
GS48	Grounding Strap	#4	8.00	203	.375	10
GS416	Grounding Strap	#4	16.00	406	.375	10

C.S.A. Grounding Kit is intended for use on Industrial Control Enclosures with panels where product must comply with Canadian Standards Association (C.S.A.) requirements. The kit includes hardware, labels and instructions for application. The grounding strap is used to provide electrical continuity between metal parts which must be electrically connected. The strap is stranded copper with a ring terminal at each end. The strap is insulated in green wrap.

Discount Schedule: C2
Subclass: DS0

GS816

GS48

GS416

Notes: Dimensions are in inches. Millimeters shown are for reference only. Data subject to change without notice.

Hardware
Illustration Sheet and Catalog Number

Sealing Device Packages

SEALS

SEALWN

SEALC

Sealing Device Packages

Catalog Number	Description	Quantity
SEALS	Wire seal screw	10
SEALWN	Wire seal wing nut	10
SEALC	Wire seal clip	10

Sealing hardware devices are used as replacement pieces for various enclosures and wireway. All hardware is plated.

Discount Schedule: C2
Subclass: DS0

Channel Nuts

Channel Nut Package

Catalog Number	Description	Quantity
TN228-20	Large, .375-16 thread	20
N624-20	Small, .25-20 thread	20
N627-20	Small, 10-32 thread	20

Channel Nuts are intended to be used on channel strut typically found in Consoles, Free-Standing, Terminal, and Disconnect Enclosures. There are two sizes of clamp nuts available. One size fits the 1.62 inch wide (large) channel; the other fits the .81 inch wide (small) channel. The small channel nuts come in two thread sizes (see table).

Discount Schedule: C2
Subclass: DS0

Touch-Up Paint

Touch-Up Paint

Catalog Number	Description
84033	White enamel
84034	ANSI 61 gray
84035	RAL 7035 light gray

Touch-Up Paint can be used to repair the finish of panels and enclosures. Paint is available in ANSI 61, RAL 7035, and White Enamel in 12oz. spray cans.

Notes: Dimensions are in inches. Millimeters shown are for reference only. Data subject to change without notice.

Industry Standards 458-459
Enclosure Comparison Charts 460-461
Materials & Finishes 462
Corrosion Charts 463-467
Wireway Selection Charts 468-470
Decimal & Metric Equivalents 471
Metric Conservion Charts 472

Industry Standards

Enclosure Ratings

Third party certifiers, such as UL & CSA, have adopted most of the enclosure ratings from the ANSI /NEMA 250 standard for electrical enclosures. Such ratings identify the environmental capabilities of enclosures based on specified performance criteria. Thus, the type of enclosure can be selected as deemed appropriate for the application.

These enclosures are intended to house electrical equipment rated at no more than 1000 volts for use in nonhazardous locations. Such enclosures do not protect devices against conditions such as condensation, icing, corrosion or contamination which may occur within the enclosure or may enter via the conduit or unsealed openings, and are not intended to prevent entry or operation by unauthorized personnel.

Sources of Standards

NATIONAL ELECTRICAL MANUFACTURERS ASSOCIATION
1300 North 17th Street
Suite 1847
Rosslyn, VA 22209

- NEMA Standards Publication No. 250, Enclosures for Electrical Equipment (1000 Volts Maximum)
- NEMA Standards Publication No. ICS6, Enclosures for Industrial Controls and Systems

ELECTRICAL/ELECTRONIC MANUFACTURERS ASSOCIATION OF CANADA
10 Carlson Court, Suite 500
Rexdale (Toronto), Ontario
Canada, M9W 6L2

UNDERWRITERS LABORATORIES INC.
333 Pfingsten Road
Northbrook, IL 60062

- UL 50, Enclosures for Electrical Equipment
- UL 50E, Enclosures for Electrical Equipment Environmental Considerations
- UL 508A, Industrial Control Panels
- UL 870, Wireway, Auxiliary Gutters and Associated Fittings
- UL 414, Meter Sockets

CANADIAN STANDARDS ASSOCIATION
178 Rexdale Boulevard
Rexdale (Toronto), Ontario
Canada, M9W IR3

- CSA Standard C22.2 No. 94, Special Purpose Enclosures, Industrial Control Equipment for use in Ordinary (Nonhazardous) locations.
- CSA Standard C22.2 No. 40 M1989, Cutout, Junction & Pull Boxes
- CSA Standard C22.2 No. 26 1952, Wireways, Auxillary Gutters & Associated Fittings
- CSA Standard C22.1, 1990, Canadian Electrical Code

NATIONAL FIRE PROTECTION ASSOCIATION
Batterymarch Park
Quincy, MA 02269

- NFPA 70 National Electrical Code

Industry Standards

An enclosure is a surrounding case constructed to provide a degree of protection to personnel against incidental contact with the enclosed equipment and to provide a degree of protection to the enclosed equipment against specified environmental conditions.

A brief description of the more common types of enclosures used by the electrical industry relating to their environmental capabilities follows:

NEMA		UL (UL 50)		CSA 22.2 No. 94-M91	
Type 1	Enclosures are intended for indoor use primarily to provide a degree of protection against limited amounts of falling dirt.	**Type 1**	Indoor use primarily to provide a degree of protection against limited amounts of falling dirt.	**Type 1**	General purpose enclosure. Protects against accidental contact with live parts.
Type 3	Enclosures are intended for outdoor use primarily to provide a degree of protection against rain, sleet, wind blown dust and damage from external ice formation.	**Type 3**	Outdoor use primarily to provide a degree of protection against rain, sleet, windblown dust and damage from external ice formation.	**Type 3**	An enclosure for either indoor or outdoor use, constructed so as to provide a degree of protection against rain, snow, and windblown dust; undamaged by the external formation of ice on the enclosure.
Type 3R	Enclosures are intended for outdoor use primarily to provide a degree of protection against rain, sleet and damage from external ice formation.	**Type 3R**	Outdoor use primarily to provide a degree of protection against rain, sleet, and damage from external ice formation.	**Type 3R**	An enclosure for either indoor or outdoor use, constructed so as to provide a degree of protection against rain, and snow, undamaged by the external formation of ice on the enclosure.
Type 4	Enclosures are intended for indoor or outdoor use primarily to provide a degree of protection against windblown dust and rain, splashing water, hose-directed water and damage from external ice formation.	**Type 4**	Indoor or outdoor use primarily to provide a degree of protection against windblown dust and rain, splashing water, hose-directed water and damage from external ice formation.	**Type 4**	An enclosure for either indoor or outdoor use, constructed so as to provide a degree of protection against rain, snow, windblown dust, splashing and hose-directed water; undamaged by the external formation of ice on the enclosure.
Type 4X	Enclosures are intended for indoor or outdoor use primarily to provide a degree of protection against corrosion, windblown dust and rain, splashing water, hose-directed water and damage from external ice formation.	**Type 4X**	Indoor or outdoor use primarily to provide a degree of protection against corrosion, windblown dust and rain, splashing water, hose-directed water and damage from external ice formation.	**Type 4X**	An enclosure for either indoor or outdoor use, constructed so as to provide a degree of protection against rain, snow, windblown dust, splashing and hose-directed water; undamaged by the external formation of ice on the enclosure; resists corrosion.
Type 12	Enclosures are intended for indoor use primarily to provide a degree of protection against circulating dust, falling dirt and dripping noncorrosive liquids.	**Type 12/12K**	Indoor use primarily to provide a degree of protection against circulating dust, falling dirt and dripping noncorrosive liquids.	**Type 12**	An enclosure for indoor use, constructed so as to provide a degree of protection against circulating dust, lint, fibres, and flyings; dripping and light splashing of noncorrosive liquids; not provided with knockouts.
Type 12K	Enclosures with knockouts are intended for indoor use primarily to provide a degree of protection against circulating dust, falling dirt and dripping non-corrosive liquids.			**Type 12K**	An enclosure for indoor use, constructed so as to provide a degree of protection against circulating dust, lint, fibres, and flyings; dripping and light splashing of noncorrosive liquids; and provided with knockouts.
Type 13	Enclosures are intended for indoor use primarily to provide a degree of protection against dust, spraying of water, oil and noncorrosive coolant.	**Type 13**	Indoor use primarily to provide a degree of protection against dust, spraying of water, oil and noncorrosive coolant.	**Type 13**	An enclosure for indoor use, constructed so as to provide a degree of protection against circulating dust, lint, fibres, and flyings; seepage and spraying of noncorrosive liquids including oils and coolants.

This material reprinted by permission of the National Electrical Manufacturers Association from NEMA Standards Publication 250, copyright 2005 by NEMA.

Comparison of Specific Applications of Enclosures for Indoor Nonhazardous Locations

Provides a degree of protection against the following environmental conditions	Enclosure Type					
	1*	4	4X	12	12K	13
Incidental contact with the enclosed equipment	X	X	X	X	X	X
Falling Dirt	X	X	X	X	X	X
Falling liquids and light splashing		X	X	X	X	X
Circulating dust, lint, fibers and flyings**		X	X	X	X	X
Settling airborne dust, lint, fibers and flyings**		X	X	X	X	X
Hosedown and splashing water		X	X			
Oil and coolant seepage				X	X	X
Oil or coolant spraying and splashing						X
Corrosive agents			X			
Occasional temporary submersion						
Occasional prolonged submersion						

* These enclosures may be ventilated.

** These fibers and flying are nonhazardous materials and are not considered the Class III type ignitable fibers or combustible flyings. For Class III type ignitable fibers or combustible flyings see the National Electrical Code, Article 500.

Comparison of Specific Applications of Enclosures for Outdoor Nonhazardous Locations

Provides a degree of protection against the following environmental conditions:	Enclosure Type			
	3	3R***	4	4X
Incidental contact with the enclosed equipment	X	X	X	X
Rain, snow and sleet*	X	X	X	X
Sleet**				
Windblown dust	X		X	X
Hosedown			X	X
Corrosive agents				X
Occasional temporary submersion				
Occasional prolonged submersion				

* External operating mechanisms are not required to be operable when the enclosure is ice covered.

** External operating mechanisms are operable when the enclosure is ice covered.

*** These enclosures may be ventilated.

"This material is reproduced by permission of the National Electrical Manufacturers Association from NEMA Standards Publication 250, copyright 1996 by NEMA."

Comparison Between NEMA Enclosure Type Numbers and IEC Enclosure Classification Designations

IEC Publication 529 *Classification of Degrees of Protection Provided by Enclosures* provides a system for specifying the enclosures of electrical equipment on the basis of degree of protection provided by the enclosure. IEC 529 does not specify degrees of protection against mechanical damage of equipment, risk of explosions, or conditions such as moisture (produced for example by condensation), corrosive vapors, fungus or vermin. NEMA Standards Publication 250 does test for environmental conditions such as corrosion, rust, icing, oil and coolants. For this reason, and because the tests and evaluations for other characteristics are not identical, the IEC Enclosure Classification Designations cannot be exactly equated with NEMA Enclosure Type Numbers.

The IEC designation consists of the letters IP followed by two numerals. The first characteristic numeral indicates the degree of protection provided by the enclosure with respect to persons and solid foreign objects entering the enclosure. The second characteristic numeral indicates the degree of protection provided by the enclosure with respect to the harmful ingress of water.

Table A-1 provides an equivalent conversion from NEMA Enclosure Type Numbers to IEC Enclosure Classification Designations. The NEMA Types meet or exceed the test requirements for the associated IEC Classifications; for this reason Table A-1 cannot be used to convert from IEC Classifications to NEMA Types.

Table A-1 Conversion of NEMA Type Numbers to IEC Classification Designations
(Cannot be used to convert IEC Classification Designations to NEMA Type Numbers)

NEMA Enclosure Type Number	IEC Enclosure Classification Designation
1	IP20
2	IP22
3	IP55
3R	IP24
3S	IP55
4 and 4X	IP66
5	IP53
6 and 6P	IP67
12 and 12K	IP54
13	IP54

Note: This comparison is based on tests specified in IEC Publication 529.

Components Suitable for Closing Openings in Enclosures

Enclosure Type	Openings shall be closed by equipment rated for enclosure types
3	3, 3S, 4, 4X
3R	3, 3R, 3S, 4, 4X
4	4, 4X
4X	4X
12,12K	12, 12K, 13, 4, 4X
13	13

Materials and Finishes

Caution: Environmental capabilities of enclosures, including materials and finishes, are limited to the degree of protection provided by the "type" rating of the selected enclosure. See industry standards for more information.

METALS

Characteristics of Various Metals

Hot Rolled Pickled and Oiled Steel Sheets (ASTM A1011)
A low-carbon, hot-finished steel that has had the normal mill oxide removed by means of an acid bath. After de-scaling, an oil film is applied to protect the surface. Removal of the mill oxide improves the surface appearance, uniformity, and finishing quality.

Cold Rolled Steel (ASTM A1008)
A low-carbon, cold-finished steel having commercial quality, close thickness tolerance and better surface than hot rolled pickled and oiled.

Galvanized/Galvanneal Steel (ASTM A653)
Steel with a zinc coating applied by the hot dip galvanizing process. The zinc coating provides a degree of corrosion protection, and also provides some protection at the sheared edges.

Stainless Steel Type 304, 316, or 316L
An excellent corrosion resistant material with excellent mechanical properties. It has many of the same chemical resistance attributes of fiberglass materials.

5052-H32 Aluminum
An excellent alloy for enclosure manufacturing. It exhibits good resistance to corrosion in a marine atmosphere.

Anodic End

More Anodic

- Magnesium
- Magnesium Alloys
- Zinc
- Beryllium
- Aluminum - Zinc Alloys (7000 series)
- Aluminum - Magnesium Alloys (5000 series)
- Aluminum (1000 series)
- Aluminum - Magnesium Alloys (3000 series)
- Aluminum - Magnesium - Silicon Alloys (6000 series)
- Cadmium
- Aluminum - Copper Alloys (2000 series)
- Cast Iron, Wrought Iron, Mild Steel
- Austenitic Nickel Cast Iron
- Type 410 Stainless Steel (active)
- Type 316 Stainless Steel (active)
- Type 304 Stainless Steel (active)
- Naval Brass, Yellow Brass, Red Brass
- Tin
- Copper
- Lead-Tin Solders
- Admiralty Brass, Aluminum Brass
- Manganese Bronze
- Silicon Bronze
- Tin Bronze
- Type 410 Stainless Steel (passive)
- Nickel - Silver
- Copper Nickel Alloys
- Lead
- Nickel - Aluminum Bronze
- Silver Solder
- Nickel 200
- Silver
- Type 316 Stainless Steel (passive)
- Type 304 Stainless Steel (passive)
- Incoloy 825
- Hastelloy B
- Titanium
- Hastelloy C
- Platinum
- Graphite

Cathodic End

Gasket Material

Peel and stick - high density polyurethane gasket with excellent compression set and oil resistance.
Temperature range for consistent use: -40°F to +194°F

Foam In Place (FIP) - two-component polyurethane foam gasket with good adhesion, strong shape re-setting, and seamless flexible size shape geometry.
Temperature range for consistent use: -40°F to +212°F

Closed cell neoprene - broad temperature range and strong resistance to aging, UV, oxidation, and ozone.
Temperature range for consistent use: -40°F to +200°F

Finishes

Polyester Urethane - Powder: A durable and smooth coating with good adhesion and corrosion resistance suitable for outdoor use. Provides good impact protection against heat or chemicals.

Electrocoat (E-Coat) - Liquid: A rugged cathodic acrylic coating that results in a unique combination of durability and corrosion resistance.

Corrosion Resistance

We manufactures enclosures from a wide range of materials, offering varying degrees of resistance against chemical corrosion. All materials are affected by corrosion in some manner. Depending on the physical properties of the material and the environment to which it is exposed, chemical or electromechanical corrosion may occur. In order to select the appropriate material for your application, refer to the corrosion resistance table on the following pages.

Atmospheric Corrosion

Atmospheric corrosion occurs when a material is exposed to airborne liquids, solids, or gases. Some sources of atmospheric corrosion are moisture, salt, dirt, and sulfuric acid. This form of corrosion is typically worse outdoors, and especially near marine environments.

To combat the effects of atmospheric corrosion, the National Electrical Manufacturers Association (NEMA) has developed the NEMA 4X rating. An enclosure carrying the NEMA 4X rating meets certain minimum conditions of corrosion resistance. Specifically, the materials from which NEMA 4X rated enclosures are formed must withstand two hundred hours of salt spray with no more evidence of corrosive pitting than is exhibited by a concurrently tested sample of Type 304 stainless steel.

We offer metallic NEMA 4X rated enclosures in aluminum, and stainless steel Type 304 and Type 316L as well as a full line of NEMA 4X rated non-metallic enclosures.

Chemical Corrosion

Chemical corrosion takes place when a material comes into direct contact with a corrosive agent. The severity of chemical corrosion is affected by chemical concentration level, frequency of washing, and operating temperature. Refer to the chart below for a general overview of how different enclosures might perform when in contact with chemicals of varying pH. The chart is provided as a quick guide to how different materials might perform in your environment. We recommend consulting the detailed corrosion resistance table provided on the following pages to be sure that the appropriate material is selected.

Storage Corrosion

Wet storage stain (White rust) is caused by the entrapment of moisture between the surfaces of closely packed and poorly ventilated material for an extended period. Wet storage stain is usually superficial, having little affect on the properties of the material.

Proper handling and storage will help to assure stain free material. If a product arrives wet, it should be unpacked and allowed to dry before storage. Dry material should be stored in a well-ventilated, low-moisture environment to avoid the formation of condensation. Outdoor storage is undesirable and should be avoided whenever possible.

Galvanic Corrosion

Galvanic corrosion occurs when two or more dissimilar metals are in contact in the presence of seawater or another electrolyte. In this situation, an electrolytic cell is created and the metals become either an anode or a cathode. The anodic material will corrode and the cathodic material will be protected.

Whether a material is anodic depends on the relative positions of the interacting materials in the Galvanic Series Table (shown at left). For example: If zinc and steel are in contact, the zinc acts as the anode and will corrode while protecting the steel. If steel and copper are in contact, the steel is now the anode and will corrode while protecting the copper.

The rate at which galvanic corrosion occurs depends on several factors:

1. The amount and concentration of electrolyte present. An indoor, dry environment will support little or no galvanic corrosion relative to a wet atmosphere.
2. The relative amount of the materials. A small amount of anodic material in contact with a large amount of cathodic material will result in accelerated corrosion of the anodic material. Inversely, a large amount of anodic material in contact with a small amount of cathodic material will decrease the rate of corrosion.
3. The relative position of the materials in the Galvanic Series. The further apart the interacting materials are in the Galvanic Series, the greater the potential for corrosion of the anodic material.

	Solvent	Caustic	Acid
Preferred	Stainless Steel Type 316 Stainless Steel Type 304 Non-Metallic Aluminum Steel, Epoxy Powder Coated	Non-Metallic Stainless Steel Type 316 Stainless Steel Type 304	Non-Metallic Stainless Steel Type 316 Stainless Steel Type 304
Satisfactory	Non-Metallic	Non-Metallic	Non-Metallic Steel, Epoxy Powder Coated
Limited		Steel, Epoxy Powder Coated Aluminum	Aluminum

Note: The corrosion data given in the table on the following pages is for general comparison only. (Reference Corrosion Resistance Tables, Second Edition)
The presence of contaminates in chemical environments can greatly affect the corrosion rate of any material. B-Line strongly suggests that field service tests or simulated laboratory tests using actual environmental conditions be conducted in order to determine the proper materials and finishes to be selected. We offer no guarantee or warranty as to the suitability of a particular material for use in any specific environment which is beyond our control.

Corrosion Resistance Table

	Unpainted Metal Enclosures									Painted Steel Enclosures					
	Aluminum			Stainless Steel Type 304			Stainless Steel Type 316			Acrylic Electrocoat, ANSI 61 Gray			Polyester Powdercoat, ANSI 61 Gray		
Chemical	Cold	Warm	Hot	Cold	Warm	Hot	Cold	Warm	Hot	Cold	Warm	Hot	Cold	Warm	Hot
Acetic Acid, 50%	R	L	U	R	R	L	R	R	R	U	U	U	R	R	U
Acetic Acid, 10%	R	L	U	R	R	R	R	R	R	U	U	U	R	R	R
Acetone	R	R	R	R	R	R	R	R	R	U	U	U	U	U	U
Aluminum Chloride	U	U	U	R	R	R	R	R	R	R	--	--	R	R	R
Aluminum Sulfate ,Saturated	R	R	R	R	R	R	R	R	R	R	--	--	R	R	R
Ammonia Gas	--	--	--	R	--	--	R	--	--	R	--	--	R	R	L
Ammonium Hydroxide, 10%	L	L	L	R	R	R	R	R	R	R	--	--	L	L	L
Amyl Acetate	R	R	R	R	R	R	R	R	R	U	U	U	L	U	U
Amyl Alcohol	R	R	R	R	--	--	R	R	R	R	--	--	R	R	R
Aniline	R	R	R	R	R	R	R	R	R	U	U	U	U	U	U
Aqua Regia	U	U	U	U	U	U	U	U	U	--	--	--	U	U	U
Benzene, Benzol	R	R	R	R	R	R	R	R	R	U	U	U	U	U	U
Benzoic Acid	L	L	U	R	R	R	R	R	R	U	U	U	R	R	--
Boric Acid	R	R	L	R	R	R	R	R	R	R	--	--	R	R	--
Bromine Water	U	U	U	U	U	U	U	U	U	U	U	U	U	U	U
Butyl Acetate	R	R	R	R	--	--	R	R	R	U	U	U	L	U	U
Butyl Alcohol, Tertiary	R	R	R	R	R	R	R	R	R	R	--	--	R	--	--
Butyric Acid	L	L	L	R	R	R	R	R	R	U	U	U	R	R	--
Calcium Chloride	L	L	U	R	R	R	R	R	R	R	--	--	R	R	R
Calcium Hydroxide	U	--	--	R	R	R	R	R	R	R	--	-	R	R	--
Calcium Nitrate	R	R	--	R	--	--	R	R	R	--	--	--	R	R	R
Carbon Dioxide, Wet	R	R	--	R	R	L	R	R	L	R	--	--	R	R	R
Carbon Disulfide (Bisulfide)	R	R	R	R	R	L	R	R	R	R	--	--	U	U	U
Carbon Monoxide	R	R	R	R	R	R	R	R	R	--	--	--	R	R	R
Carbon Tetrachloride	L	L	U	L	L	L	R	R	R	U	U	U	U	U	U
Chlorine, Liquid	--	--	--	R	L	--	--	--	--	--	--	--	--	--	--
Chlorine Water, Saturated	R	--	--	U	U	U	U	U	U	R	--	--	R	R	R
Chlorobenzene (Phenylchloride)	R	R	--	R	R	L	R	R	R	U	U	U	U	U	U
Chloroform	R	L	U	R	L	L	R	R	R	U	U	U	U	U	U
Chlorox Bleach Solution, 5.5% Chlorine	U	U	U	--	--	--	R	--	--	--	--	--	--	--	--
Chromic Acid, 10%	R	R	--	R	R	L	R	R	R	U	U	U	U	U	U
Citric Acid, 5%	L	L	L	R	U	U	R	R	R	R	--	--	R	R	R
Copper Chloride	U	U	U	U	U	U	U	U	U	R	--	--	R	R	R
Copper Sulfate	U	U	U	R	R	R	R	R	R	U	U	U	R	R	R
Cresol	R	L	--	R	R	--	R	L	--	U	U	U	U	U	U
Crude Oil	R	R	--	R	R	R	R	R	R	--	--	--	R	R	R
Diesel Fuels	R	--	--	R	--	--	R	--	--	--	--	--	R	R	--
Dimethyl Formamide	R	--	--	--	--	--	R	R	R	U	U	U	U	U	U
Dioxane	R	R	R	R	R	R	R	R	R	--	--	--	U	U	U
Ethyl Acetate	R	R	R	R	R	L	R	R	R	U	U	U	U	U	U
Ethyl Alcohol	R	R	R	R	R	R	R	R	R	U	U	U	R	--	--
Ethyl Chloride	R	R	R	R	R	R	R	R	R	U	U	U	--	--	--
Ethyl Ether	R	--	--	R	R	R	R	R	R	U	U	U	U	U	U
Ethylene Glycol	R	R	L	R	R	--	R	R	R	R	--	--	R	R	R
Ethylene Oxide	R	R	R	R	R	L	R	R	R	--	--	--	U	U	U
Ferric Chloride	U	U	U	U	U	U	U	U	U	R	--	--	R	R	--
Formaldehyde, 37% Solution	R	R	R	R	R	R	R	R	R	R	--	--	R	R	--
Formic Acid, 10%	R	R	--	R	R	U	R	R	R	U	U	U	--	--	--
Freon, F-22	R	--	--	R	--	--	R	R	R	--	--	-- --	--	--	
Gasoline, Unleaded	R	R	R	R	--	--	R	--	--	R	U	U	R	R	R
Heptane	R	L	--	R	R	R	R	R	R	--	--	--	R	R	R
Hexane	R	--	--	R	R	R	R	R	R	R	--	--	R	--	--
Hydrobromic Acid, Dilute	U	U	U	U	U	U	U	U	U	--	--	--	R	R	--

The corrosion data given in this table is for general comparison only. (Reference Corrosion Resistance Tables, Second Edition)
The presence of contaminates in chemical environments can greatly affect the corrosion rate of any material.

R = Recommended L = Limited Use U = Unsatisfactory – = Information not available Cold = 50-80°F Warm = 130-170°F Hot = 200-212°F

Corrosion Resistance Table

Non-Metallic Enclosures			Door Gasket Materials				
Polyamide	Polycarbonate	Polyester	Foam-in-Place Polyurethane Sponge	Polyurethane Sponge	Neoprene Rubber Sponge	Silicone Rubber Sponge	Viton, Rubber Sponge
L	L	R	--	--	L	R	R
R	R	R	L	L	L	R	R
R	U	U	U	U	L	U	U
L	R	R	R	R	R	R	R
L	R	R	R	R	R	R	R
U	U	L	R	R	R	--	U
U	U	U	R	R	R	R	R
--	U	L	U	U	U	U	U
--	L	L	U	U	R	U	R
U	U	U	U	U	U	R	R
--	L	U	U	U	--	--	R
R	U	L	U	U	R	U	R
L	U	L	R	U	R	R	R
L	R	R	R	L	U	R	R
--	U	U	--	U	U	U	R
--	U	L	R	U	U	R	R
R	R	R	--	--	U	R	R
L	U	L	--	--	U	U	R
R	R	R	R	R	R	R	R
U	--	U	--	L	R	R	R
L	R	R	--	L	R	R	R
L	--	R	R	R	R	R	R
R	U	L	--	--	U	--	R
L	--	R	--	R	R	R	R
R	U	L	U	U	U	U	R
L	L	L	--	--	U	U	R
R	R	R	--	U	U	U	R
R	U	U	L	U	U	U	R
R	U	U	L	U	U	U	R
--	L	R	--	--	U	U	U
U	R	L	U	U	U	L	R
R	R	R	R	--	R	R	R
L	R	--	--	R	R	R	R
L	R	R	--	R	R	--	R
U	U	U	--	U	U	--	R
L	--	L	--	L	U	U	R
--	R	R	R	--	R	U	R
U	U	L	U	--	U	L	L
--	U	L	--	--	U	L	L
R	U	L	L	U	U	R	U
R	L	R	R	U	U	R	U
R	U	L	--	--	L	U	R
R	U	U	--	U	U	U	U
L	R	R	R	R	R	R	R
--	R	R	--	U	U	U	U
L	R	R	--	R	R	R	R
L	R	R	--	U	R	--	L
R	R	L	U	U	R	R	R
--	U	R	--	U	R	U	R
R	L	R	--	R	R	U	R
R	R	R	R	U	R	U	R
--	L	R	R	R	R	U	R
L	--	L	--	--	U	U	R

The corrosion data given in this table is for general comparison only. (Reference Corrosion Resistance Tables, Second Edition)
The presence of contaminates in chemical environments can greatly affect the corrosion rate of any material.

R = Recommended L = Limited Use U = Unsatisfactory -- = Information not available Cold = 50-80°F Warm = 130-170°F Hot = 200-212°F

Corrosion Resistance Table cont.

	Unpainted Metal Enclosures									Painted Steel Enclosures					
	Aluminum			Stainless Steel Type 304			Stainless Steel Type 316			Acrylic Electrocoat, ANSI 61 Gray			Polyester Powdercoat, ANSI 61 Gray		
Chemical	Cold	Warm	Hot	Cold	Warm	Hot	Cold	Warm	Hot	Cold	Warm	Hot	Cold	Warm	Hot
Hydrochloric Acid, 20%	U	U	U	U	U	U	U	U	U	R	--	--	R	R	--
Hydroflouric Acid, 10%	U	U	U	U	U	U	U	U	U	--	--	--	R	--	--
Hydrogen Peroxide, 30%	R	R	R	R	R	R	R	R	R	--	--	--	R	--	--
Hydrogen Sulfide, Wet	R	--	--	U	U	U	R	R	R	R	R	--	R	R	--
Isopropyl Alcohol	R	--	--	R	R	--	R	R	R	--	--	--	U	U	U
Jet Fuels	R	R	--	R	--	--	R	R	R	R	--	--	R	R	--
Kerosine	R	R	--	R	R	R	R	R	R	R	--	--	R	R	--
Lactic Acid, 10%	R	--	--	R	R	L	R	R	R	U	U	U	R	R	R
Magnesium Chloride	U	U	U	L	L	L	R	R	R	R	--	--	R	R	R
Methyl Alcohol	R	L	--	R	R	L	R	R	R	--	--	--	R	R	--
Methyl Ethyl Ketone	R	L	--	R	L	--	R	R	R	U	U	U	U	U	U
Methylene Chloride	R	R	R	R	R	L	R	R	R	U	U	U	U	U	U
Mineral Oils	R	R	--	R	--	--	R	R	R	R	--	--	R	--	--
Naptha	R	--	--	R	R	--	R	--	--	R	U	U	R	R	R
Nitric Acid, 10%	U	U	U	R	R	R	R	R	R	R	--	--	R	R	U
Nitrobenzene	R	--	--	R	R	L	R	R	R	U	U	U	U	U	U
Oleic Acid	R	--	--	R	R	L	R	R	R	R	R	--	R	R	R
Oleum	R	--	--	R	--	--	R	--	--	U	U	U	U	U	U
Oxalic Acid, 10%	R	L	--	U	U	U	U	U	U	R	--	--	R	R	--
Oxygen	R	R	--	R	--	--	R	R	R	--	--	--	--	--	--
Ozone	R	R	--	R	R	--	R	R	R	--	--	--	--	--	--
Perchloroethylene	R	R	R	R	R	R	R	R	R	--	--	--	R	U	U
Phenol	R	R	R	R	R	R	R	R	R	R	--	--	U	U	U
Phosphoric Acid, 25%	U	U	U	R	R	L	R	L	U	R	--	--	R	R	R
Phthalic Acid	R	R	R	R	R	R	R	R	R	--	--	--	R	--	--
Potassium Chloride, 30%	U	U	U	R	R	R	R	R	R	R	--	--	R	R	R
Potassium Dichromate, 30%	R	R	L	R	R	R	R	R	R	R	--	--	R	R	R
Potassium Hydroxide, 10%	U	U	U	R	R	L	R	R	R	R	R	U	U	U	U
Potassium Nitrate, 50%	R	R	R	R	R	L	R	R	R	R	--	--	R	R	R
Potassium Permanganate, 10%	R	R	R	R	L	L	R	R	L	U	U	U	R	R	--
Pyradine	R	R	R	R	R	R	R	R	R	--	--	--	U	U	U
Sodium Bicarbonate, 20%	R	--	--	R	R	R	R	R	R	R	--	--	R	R	--
Sodium Bisulfite, 10%	U	U	U	R	R	L	R	R	R	R	--	--	R	R	--
Sodium Carbonate, 10%	U	U	U	R	R	L	R	R	R	U	U	U	R	R	U
Sodium Chlorate, 10%	R	R	R	R	R	R	R	R	R	R	--	--	R	R	--
Sodium Chloride, 10%	R	U	U	R	R	L	R	R	R	R	--	--	R	R	R
Sodium Hydroxide, 10%	U	U	U	R	R	R	R	R	R	R	--	--	R	U	U
Sodium Hypochlorite, 10%	R	L	L	R	L	U	R	--	--	R	R	--	U	U	U
Sodium Nitrate	R	R	R	R	R	U	R	R	R	R	--	--	R	R	R
Sodium Sulfate	R	R	L	R	R	U	R	R	R	R	--	--	R	R	U
Sulfur Dioxide	R	R	R	R	R	R	R	R	R	R	R	--	R	R	R
Sulfuric Acid, 5%	U	U	U	L	U	U	R	--	--	R	--	--	R	R	R
Tartaric Acid	L	U	U	R	R	R	R	R	R	--	--	--	R	R	R
Tetrahydrofuran	U	U	U	R	--	--	L	L	L	--	--	--	U	U	U
Toluene	R	R	R	R	R	R	R	R	R	U	U	U	R	U	U
Trichloroacetic Acid	U	U	U	U	U	U	U	U	U	--	--	--	R	R	U
Trichloroethylene	R	R	L	R	L	L	R	R	L	U	U	U	U	U	U
Trisodium Phosphate	U	U	U	R	R	--	R	R	--	--	--	--	R	R	U
Turpentine	L	--	--	R	R	--	R	R	L	R	--	--	R	R	--
Water	R	R	L	R	R	R	R	R	R	R	--	--	R	R	R
Xylene	R	R	R	R	R	R	R	R	R	--	--	--	R	--	--
Zinc Chloride	U	U	U	U	U	U	L	L	L	R	--	--	R	R	R
Zinc Sulfate	U	U	U	R	R	R	R	R	R	R	--	--	R	R	R

The corrosion data given in this table is for general comparison only. (Reference Corrosion Resistance Tables, Second Edition)
The presence of contaminates in chemical environments can greatly affect the corrosion rate of any material.

R = Recommended L = Limited Use U = Unsatisfactory -- = Information not available Cold = 50-80°F Warm = 130-170°F Hot = 200-212°F

Corrosion Resistance Table

Non-Metallic Enclosures			Door Gasket Materials				
Polyamide	Polycarbonate	Polyester	Foam-in-Place Polyurethane Sponge	polyurethane Sponge	Neoprene Rubber Sponge	Silicone Rubber Sponge	Viton, Rubber Sponge
L	L	L	R	R	R	R	R
L	R	L	--	--	R	U	R
--	R	R	--	--	U	R	R
L	R	R	--	--	R	L	U
R	R	R	--	U	U	U	U
R	L	R	--	U	U	U	R
R	R	R	--	U	R	U	R
L	R	R	--	--	R	R	R
L	R	R	R	R	R	R	R
R	L	L	U	U	R	U	U
R	U	L	U	U	U	U	U
R	U	U	U	U	--	--	R
L	R	R	R	R	R	R	R
--	R	R	--	R	U	U	R
L	R	L	U	U	U	U	R
L	U	L	--	U	U	U	R
L	R	R	R	R	L	U	R
U	--	U	--	U	L	U	R
L	R	R	--	--	U	R	R
L	R	R	--	--	U	R	R
--	U	L	R	--	L	R	R
R	--	U	U	U	U	U	R
L	U	U	--	U	R	U	R
L	L	L	--	--	R	--	--
L	--	R	--	--	R	R	R
--	R	R	R	R	R	R	R
U	--	L	--	R	R	R	R
L	U	U	--	R	R	L	R
L	R	R	--	--	R	R	R
U	R	L	--	--	R	--	R
L	U	--	--	--	L	R	R
U	R	R	--	--	R	R	R
--	R	R	--	--	R	R	R
U	R	R	--	--	R	R	R
--	R	R	--	--	R	L	R
L	R	R	R	R	R	R	R
R	U	L	--	--	R	R	R
U	R	L	--	--	L	R	R
L	U	R	--	--	R	U	R
L	R	R	--	R	R	R	R
L	L	R	--	--	R	R	R
L	L	L	U	U	U	U	R
L	R	R	--	R	R	R	R
--	U	U	U	--	U	U	U
L	U	L	L	U	--	R	R
--	R	U	--	--	U	U	L
L	--	L	L	U	U	U	R
U	L	--	--	R	R	R	R
--	L	R	R	U	U	U	R
R	R	R	R	R	U	--	R
--	U	L	L	U	U	U	R
L	R	R	--	--	R	R	R
L	R	R	--	--	R	R	R

The corrosion data given in this table is for general comparison only. (Reference Corrosion Resistance Tables, Second Edition)
The presence of contaminates in chemical environments can greatly affect the corrosion rate of any material.

R = Recommended L = Limited Use U = Unsatisfactory -- = Information not available Cold = 50-80°F Warm = 130-170°F Hot = 200-212°F

Wireway Selection (Reference NFPA 70, National Electrical Code)

Definition

Wireways are troughs with hinged or removable covers for housing and protecting electric wires and cable. Conductors are laid into the wireway after the wireway has been installed as a complete system.

Uses

The use of wireways are permitted as follows:

1. For exposed work in dry locations. For outdoor or wet locations, use Type 3R wireway.
2. If installed in inaccessible spaces, the use of wireway is permitted only for use with audio signal conductors (per NEC®† 376.10).
3. In hazardous locations as permitted by NEC®† sections 501, 502 and 504.
4. For extensions through walls, if the length passing through the wall is unbroken and access to conductors can be maintained from both sides.

The use of wireways is not permitted where a risk of severe physical damage or corrosive vapor is present.

Size of Conductors

Table I shows maximum allowable cable sizes for varying wireway sizes. (Based on UL 870 Table 7.1)

Table I

Wireway Size Inches	Maximum Cable Size AWG or kcmil
2.5x2.5	2
3x3	1
4x4	4/0
4x6	4/0
6x6	500
12x6	500
8x8	900
10x10	1250
12x12	2000

Conductors entering the wireway only at the ends of runs are limited in size only by the 20 percent fill requirement of the NEC®. However, it is recommended that wire sizes not exceed those in Table I above.

Number of Conductors

Wireways which contain no more than 30 current-carrying conductors at any cross section, and for which the sum of the cross-sectional areas of all contained conductors at any cross section does not exceed 20% of the interior cross-sectional area of the wireway, require no derating of cables. (Refer to Table II below)

Table II

Wireway Size Inches	Allowable Cable Area sq. in.
2.5x2.5	1.2
3x3	1.8
4x4	3.2
4x6	4.8
6x6	7.2
8x8	12.8
12x6	14.4
10x10	20.0
12x12	28.8

Cross sectional area of conductors ≤ 20% of cross sectional area of wireway.

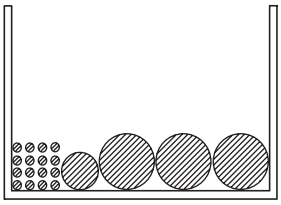

For exceptions allowing more conductors, see NEC® 376.22(B).

† Marks are the property of their respective owners.

Splices and Taps

Splices and taps are permitted within a wireway, provided they are accessible. The conductors, including splices and taps, shall not fill the wireway to more than 75 percent of its area at the point of a splice or tap.

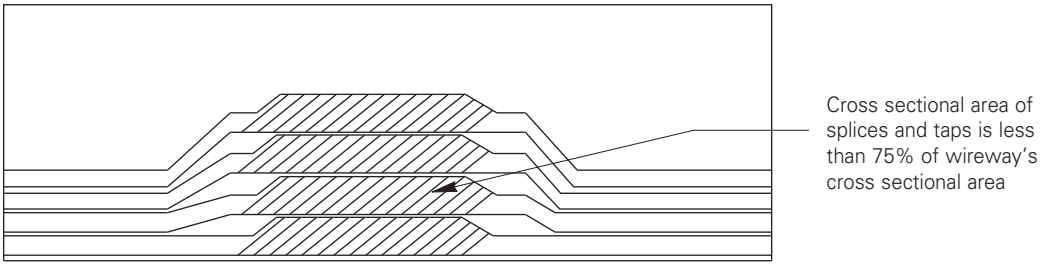

Cross Sectional Area of Conductors

Single Conductor Cable 600V

SIZE	Cross Sectional Area of Conductors (sq. in.)							
	XXHW, XXHW-2, XHH		THHN, THWN THWN-2		THW, THW-2, THHW		RHH*, RHW* RHW-2*	
AWG-kcml	Diameter in.	Area in.²	Diameter in.	Area in.²	Diameter in.	Area in.²	Diameter in.	Area in.²
14	0.1330	1.0139	0.1110	0.0097	0.1630	0.0209	0.1930	0.0293
12	0.1520	1.0181	0.1300	0.0133	0.1820	0.0260	0.2120	0.0353
10	0.1760	0.0243	0.1640	0.0211	0.2060	0.0333	0.2360	0.0437
8	0.2360	0.0437	0.2160	0.0366	0.2660	0.0556	0.3260	0.0835
6	0.2740	0.0590	0.2540	0.0507	0.3040	0.0726	0.3640	0.1041
4	0.3220	0.0814	0.3240	0.0824	0.3520	0.0973	0.4120	0.1333
3	0.3500	0.0962	0.3520	0.0973	0.3800	0.1134	0.4400	0.1521
2	0.3820	0.1146	0.3840	0.1158	0.4120	0.1333	0.4720	0.1750
1	0.4420	0.1534	0.4460	0.1562	0.4920	0.1901	0.5850	0.2688
1/0	0.4820	0.1825	0.4860	0.1855	0.5320	0.2223	0.6220	0.3039
2/0	0.5280	0.2190	0.5320	0.2223	0.5780	0.2624	0.6680	0.3505
3/0	0.5800	0.2642	0.5840	0.2679	0.6300	0.3117	0.7200	0.4072
4/0	0.6380	0.3197	0.6420	0.3237	0.6880	0.3718	0.7780	0.4754
250	0.7050	0.3904	0.7110	0.3970	0.7650	0.4596	0.8950	0.6291
300	0.7600	0.4536	0.7660	0.4608	0.8200	0.5281	0.9500	0.7088
350	0.8110	0.5166	0.8170	0.5242	0.8710	0.5958	1.0010	0.7870
400	0.8580	0.5782	0.8640	0.5863	0.9180	0.6619	1.0480	0.8626
500	0.9430	0.6984	0.9490	0.7073	1.0030	0.7901	1.1330	1.0082
600	1.0530	0.8790	1.0510	0.8676	1.1130	0.9729	1.2430	1.2135
700	1.1240	0.9923	1.1220	0.9887	1.1840	1.1010	1.3140	1.3561
750	1.1580	1.0532	1.1560	1.0496	1.2180	1.1652	1.3480	1.4272
800	1.1900	1.1122	1.1880	1.1085	1.2500	1.2272	1.3800	1.4957
900	1.2540	1.2351	1.2520	1.2311	1.3140	1.3561	1.4440	1.6377
1000	1.3120	1.3519	1.3100	1.3478	1.3720	1.4784	1.5020	1.7719
1250	1.4790	1.7180	-	-	1.5390	1.8602	1.7290	2.3479
1500	1.6020	2.0156	-	-	1.6620	2.1695	1.8520	2.6938
1750	1.7160	2.3127	-	-	1.7760	2.4773	1.9660	3.0357
2000	1.8220	2.6073	-	-	1.8820	2.7818	2.0720	3.3719

* RHH, RHW and RHW-2 without covering have the same dimension as THW.

Wireway Selection

Sample Calculation

A. Wireway dimensions are obtained as follows:

1. List cables by size and types.
2. List cable cross sectional areas.
3. List the number of each size of cable.
4. Multiply cable cross sectional areas by number of each cable.
5. Sum the total cross sectional areas of each cable type to obtain the total cross sectional areas for the conductors.

List Cable Sizes and Types	List Cable Cross Sectional Areas (A) sq. in.		List Number of Cables (N)		Multiply (A) x (N) = Total Cross Sectional Area for Each Size sq. in.
2 AWG-XXHW	0.1182	x	4	=	0.4728
2/0-TW	0.2290	x	2	=	0.4580
750 kcmil-RHH	1.1300	x	2	=	2.2600
	Sum of the total cross sectional areas =				3.1908

6. The wireway must first meet the dimensional requirements for the largest conductor. In the example above, the largest conductor is 750 kcmil. The minimum wireway cross section based on the largest conductor size requirements is 8" x 8", as shown in Table I on page 466.
7. The wireway dimensions must meet 20% fill requirements. Based on the sum of the total conductor cross sectional areas (3.19 sq. in.), the minimum wireway cross section, based on the 20% fill requirements is 4" x 4" as shown in Table II on page 466.
8. In this example, the wireway dimensions must be the larger of the two cross sections obtained in steps 6 and 7. In this case, 8" x 8" wireway is required.

Decimal and Metric Equivalents

4ths	8ths	16ths	32nds	64ths	To 3 places	To 2 places	Millimeters
				1/64	.016	.02	0
			1/32		.031	.03	1
				3/64	.047	.05	1
		1/16			.062	.06	2
				5/64	.078	.08	2
			3/32		.094	.09	2
				7/64	.109	.11	3
	1/8				.125	.12	3
				9/64	.141	.14	4
			5/32		.156	.16	4
				11/64	.172	.17	4
		3/16			.188	.19	5
				13/64	.203	.20	5
			7/32		.219	.22	6
				15/64	.234	.23	6
1/4					.250	.25	6
				17/64	.266	.27	7
			9/32		.281	.28	7
				19/64	.297	.30	8
		5/16			.312	.31	8
				21/64	.328	.33	8
			11/32		.344	.34	9
				23/64	.359	.36	9
	3/8				.375	.38	10
				25/64	.391	.39	10
			13/32		.406	.41	10
				27/64	.422	.42	11
		7/16			.438	.44	11
				29/64	.453	.45	12
			15/32		.469	.47	12
				31/64	.484	.48	12
1/2					.500	.50	13
				33/64	.516	.52	13
			17/32		.531	.53	13
				35/64	.547	.55	14
		9/16			.562	.56	14
				37/64	.578	.58	15
			19/32		.594	.59	15
				39/64	.609	.61	15
	5/8				.625	.62	16
				41/64	.641	.64	16
			21/32		.656	.66	17
				43/64	.672	.67	17
		11/16			.688	.69	17
				45/64	.703	.70	18
			23/32		.719	.72	18
				47/64	.734	.73	19
3/4					.750	.75	19
				49/64	.766	.77	19
			25/32		.781	.78	20
				51/64	.797	.80	20
		13/16			.812	.81	21
				53/64	.828	.83	21
			27/32		.844	.84	21
				55/64	.859	.86	22
	7/8				.875	.88	22
				57/64	.891	.89	23
			29/32		.906	.91	23
				59/64	.922	.92	23
		15/16			.938	.94	24
				61/64	.953	.95	24
			31/32		.969	.97	25
				63/64	.984	.98	25
1					1.000	1.00	25

Metric Conversion Tables

LENGTH

U.S. to Metric			Metric to U.S.		
1 inch	=	25.40 millimeters	1 millimeter	=	0.03937 inch
1 inch	=	2.540 centimeters	1 centimeter	=	0.3937 inch
1 foot	=	30.480 centimeters	1 meter	=	39.37 inches
1 foot	=	0.3048 meter	1 meter	=	3.2808 feet
1 yard	=	91.440 centimeters	1 meter	=	1.0936 yards
1 yard	=	0.9144 meter	1 kilometer	=	0.62137 mile
1 mile	=	1.609 kilometers			

AREA

U.S. to Metric			Metric to U.S.		
1 sq. inch	=	645.16 sq. millimeters	1 sq. millimeter	=	0.00155 sq. inch
1 sq. inch	=	6.4516 sq. centimeters	1 sq. centimeter	=	0.1550 sq. inch
1 sq. foot	=	929.03 sq. centimeters	1 sq. meter	=	10.7640 sq. feet
1 sq. foot	=	0.0929 sq. meter	1 sq. meter	=	1.196 sq. yards
1 sq. yard	=	0.836 sq. meter			

Catalog Number	Page Number	Catalog Number	Page Number
10106-12CHC	93	10243 A	454
10106-12CHSC	97	10243 B	454
10106-12SC	95	10243 C	454
10106-4QT	141	10243 D	454
101060 G	10	1064 SC NK	51
101060 G NK	10	1064 SCGV NK	51
101060 GGV NK	10	108P (GP)	154, 212
101060 GRT NK	43	108PSS4	154, 212
101060 GRTGV NK	43	108 SCF	53
101060 HS	16	108TB	442
101060 HS NK	16	108TS	441
101072 G	10	1084-FTC	103
101072 G NK	10	1084 HC	54
101072 GGV NK	10	1084 HC NK	54
101072 GRT NK	43	1084 RTSC	57
101072 GRTGV NK	43	1084 RTSC NK	57

Product Number Index 474-508

Catalog Number	Page Number
00011184 A	427
10TB	441
10TS	440
10URMA	157, 215
10.5 BAP	452
10.5 BAP SS	452
1010 C	11
1010 E	11
1010 E NK	11
1010 EGV	11
1010 EGV NK	11
1010 FH	12, 18
1010 FL IN	13
1010 FL OUT	13
1010 FL SIDE	13
1010 FTF	11, 17
1010 FTFGV	11
1010 GF	11
1010 GFGV	11
1010 HSC	17
1010 HSCA	17
1010 HSCU	17
1010 HSE	17
1010 HSE NK	17
1010 HSF	18
1010 HSL IN	19
1010 HSL OUT	19
1010 HSL SIDE	19
1010 HST	20
1010 HSX	20
1010 L COMBO	13
1010 L COMBOGV	13
1010 L SIDE	13
1010 L SWEEP	13
1010 L SWEEPGV	13
1010 LTX	12
1010 LTXGV	12
1010 SCF	53
1010 SCS	53
1010 T	14
1010 TCF	80
1010 TCS	80
1010 TGV	14
1010 WB	413
1010 X	14
1010 XGV	14
1010-12BK	12, 18
101012 G	10
101012 G NK	10
101012 GGV NK	10
101012 HS	16
101012 HS NK	16
1010120 G	10
1010120 G NK	10
1010120 GGV NK	10
1010120 GRT NK	43
1010120 GRTGV NK	43
1010120 HS	16
1010120 HS NK	16
10101212 FR	12, 17
101024 G	10
101024 G NK	10
101024 GGV NK	10
101024 GRT NK	43
101024 GRTGV NK	43
101024 HS	16
101024 HS NK	16
101036 G	10
101036 G NK	10
101036 GGV NK	10
101036 GRT NK	43
101036 GRTGV NK	43
101036 HS	16
101036 HS NK	16
10104 HC	54
10104 HC NK	54
10104 RTHC	58
10104 RTHC NK	58
10104 RTSC	57
10104 RTSC NK	57
10104 RTSCGV	57
10104 RTSCGV NK	57
10104 SC	51
10104 SC NK	51
10104 SCG	61
10104 SCGV	51
10104 SCGV NK	51
10104 TCF	80
10104 TCS	80
10104 WPSC	63
10104-1	65
10104-12CHSC	97
10104-12SC	95
101045 HSL COMBO	19
101045 HSL SIDE	19
101045 L COMBO	14
101045 L COMBOGV	14
101045 L SIDE	14
101048 G	10
101048 G NK	10
101048 GGV NK	10
101048 GRT NK	43
101048 GRTGV NK	43
101048 GTGV NK	41
101048 HS	16
101048 HS NK	16
10106 HC	54
10106 HC NK	54
10106 RTSC	57
10106 RTSC NK	57
10106 RTSCGV	57
10106 RTSCGV NK	57
10106 SC	52
10106 SC NK	52
10106 SCG	61
10106 SCGV	52
10106 SCGV NK	52
10106 TCF	80
10106 TCS	80
10106 WPSC	63

Catalog Number	Page Number
10106-1	65
10106-12CHC	93
10106-12CHSC	97
10106-12SC	95
10106-4QT	141
101060 G	10
101060 G NK	10
101060 GGV NK	10
101060 GRT NK	43
101060 GRTGV NK	43
101060 HS	16
101060 HS NK	16
101072 G	10
101072 G NK	10
101072 GGV NK	10
101072 GRT NK	43
101072 GRTGV NK	43
10108 A	453
10108 RTSC	57
10108 RTSC NK	57
10108 RTSCGV NK	57
10108 SC NK	52
10108 SCGV NK	52
10108-12CHC	93
101096 GRT NK	43
101096 GRTGV NK	43
10118 A	453
10119 A	453
10129 A	453
10166 A	453
10167 A	453
10168	409, 410, 453
10169	453
10184 A	454
10184 B	454
10184 C	454
10240 A	453
10242 A	453
10242 B	453
10242 C	453
10242 D	453
10243 A	453
10243 B	453
10243 C	453
10243 D	453
1064 SC NK	51
1064 SCGV NK	51
108P (GP)	154, 212
108PSS4	154, 212
108 SCF	53
108TB	441
108TS	440
1084-FTC	103
1084 HC	54
1084 HC NK	54
1084 RTSC	57
1084 RTSC NK	57
1084 SC	51
1084 SC NK	51
1084 SCG	61
1084 SCGV	51
1084 SCGV NK	51
1084-SD	146
1084-SDLG	146
1084-SDSS4	209
1084-SDSS6	210
1084 WPSC	63
1084-1	65
1084-12CHC	93
1084-12CHCS	93
1084-12CHQRC	99
1084-12CHSC	97
1084-12LC	91
1084-12SC	95
1084-4CHC	139
1084-4LC	137
1084-4QT	141
1084-4XACHC	201
1084-4XALC	197
1084-4XFCHQRC	261
1084-4XFCHQRCW	263
1084-4XFCHSC	259
1084-4XFLC	257
1084-4XSCHC	199
1084-4XSLC	195
1084-4XSQT	203
1084-4XSS6CHC	199
1084-4XSS6LC	195
1085-4XFCHQRC	261
1085-4XFCHQRCW	263
1085-4XFCHSC	259
1085-4XFLC	257
1086 HC	54
1086 HC NK	54
1086 RHC	72
1086 RTSC	57
1086 RTSC NK	57
1086 SC	52
1086 SC NK	52
1086 SCGV	52
1086 SCGV NK	52
1086-SD	146
1086-SDF	265
1086-SDFQR	267
1086-SDFQRCC	269
1086-SDLG	146
1086-SDSS4	209
1086-SDSS6	210
1086-1	65
1086-12CHC	93
1086-12CHSC	97
1086-12SC	95
1086-4CHC	139
1086-4QT	141
1086-4XSQT	203
1144-4XFSC	271
12DR1P	156, 214
12DR3P	155, 214
12DRCP	155, 214
12GS1	156, 214

Catalog Number	Page Number
12MC	156, 213
12PMK	159, 217
12TB	441
12TS	440
12URMA	157, 215
1210P (GP)	154, 212
1210PSS4	154, 212
1210TB	441
1210 TCF	80
1210 TCS	80
1210TS	440
1210 WB	413
12104 HC	54
12104 HC NK	54
12104 RTSC	57
12104 RTSC NK	57
12104 SC	51
12104 SC NK	51
12104 SCGV	51
12104 SCGV NK	51
12104 TCF	80
12104 TCS	80
12104-1	65
12104-12CHSC	97
12105-12CHC	93
12105-12CHCS	93
12105-12CHQRC	99
12105-12LC	91
12105-12SC	95
12105-4CHC	139
12105-4LC	137
12105-4QT	141
12105-4XALC	197
12105-4XFCHQRC	261
12105-4XFCHQRCW	263
12105-4XFCHSC	259
12105-4XFLC	257
12105-4XSLC	195
12105-4XSQT	203
12105-4XSS6LC	195
12105-FTC	103
12106 HC	54
12106 HC NK	54
12106 RHC	72
12106 RTHC	58
12106 RTHC NK	58
12106 RTSC	57
12106 RTSC NK	57
12106 SC	52
12106 SC NK	52
12106 SCG	61
12106 SCGV	52
12106 SCGV NK	52
12106-SD	146
12106-SDF	265
12106-SDFQR	267
12106-SDFQRCC	269
12106-SDLG	146
12106-SDSS4	209
12106-SDSS6	210
12106 TCF	80
12106 TCS	80
12106-1	65
12106-12CHC	93
12106-12CHSC	97
12106-4QT	141
12106-4XACHC	201
12106-4XSCHC	199
12106-4XSS6CHC	199
12108-12CHC	93
12108-4QT	141
12108-4XSQT	203
1212 C	11
1212DF	155, 213
1212 E	11
1212 E NK	11
1212 EGV	11
1212 EGV NK	11
1212 FH	12, 18
1212 FL IN	13
1212 FL OUT	13
1212 FL SIDE	13
1212 FTF	11, 17
1212 FTFGV	11
1212 GF	11
1212 GFGV	11
1212 HSC	17
1212 HSCA	17
1212 HSCU	17
1212 HSE	17
1212 HSE NK	17
1212 HSF	18
1212 HSL IN	19
1212 HSL OUT	19
1212 HSL SIDE	19
1212 HST	20
1212 HSX	20
1212 L COMBO	13
1212 L COMBOGV	13
1212 L SIDE	13
1212 L SWEEP	13
1212 L SWEEP GV	13
1212 LTX	12
1212 LTXGV	12
1212P (GP)	154, 212
1212PSS4	154, 212
1212 SCF	53
1212 SCS	53
1212SP	155, 213
1212 T	14
1212 TCF	80
1212 TCS	80
1212 TGV	14
1212TS	440
1212 WB	413
1212 X	14
1212 XGV	14
1212-12BK	12, 18
121210 RHC	72
121210 RTSC	57

Catalog Number	Page Number
121210 RTSC NK	57
121210 SC NK	53
121210 SCGV NK	53
121212 G	10
121212 G NK	10
121212 GGV NK	10
121212 HS	16
121212 HS NK	16
121212 SC NK	53
121212 SCGV NK	53
1212120 G	10
1212120 G NK	10
1212120 GGV NK	10
1212120 GRT NK	43
1212120 GRTGV NK	43
1212120 HS	16
1212120 HS NK	16
121224 G	10
121224 G NK	10
121224 GGV NK	10
121224 GRT NK	43
121224 GRTGV NK	43
121224 GTGV NK	41
121224 HS	16
121224 HS NK	16
121236 G	10
121236 G NK	10
121236 GGV NK	10
121236 GRT NK	43
121236 GRTGV NK	43
121236 GTGV NK	41
121236 HS	16
121236 HS NK	16
12124 HC	54
12124 HC NK	54
12124 RTC	81
12124 RTHC	58
12124 RTHC NK	58
12124 RTSC	57
12124 RTSC NK	57
12124 RTSCGV	57
12124 RTSCGV NK	57
12124 SC	51
12124 SC NK	51
12124 SCG	61
12124 SCGV	51
12124 SCGV NK	51
12124 TCF	80
12124 TCS	80
12124 WPSC	63
12124-1	65
121245 HSL COMBO	19
121245 HSL SIDE	19
121245 L COMBO	14
121245 L COMBOGV	14
121245 L SIDE	14
121248 G	10
121248 G NK	10
121248 GGV NK	10
121248 GRT NK	43
121248 GRTGV NK	43
121248 GTGV NK	41
121248 HS	16
121248 HS NK	16
12126-FM	151
12126 HC	54
12126 HC NK	54
12126 RHC	72
12126 RTC	81
12126 RTHC	58
12126 RTHC NK	58
12126 RTSC	57
12126 RTSC NK	57
12126 RTSCGV	57
12126 RTSCGV NK	57
12126 SC	52
12126 SC NK	52
12126 SCG	61
12126 SCGV	52
12126 SCGV NK	52
12126-SD	148
12126-SDLG	148
12126-SDSS4	209
12126-SDSS6	210
12126-SDW	148
12126-SDWLG	148
12126-SDWSS4	209
12126 TCF	80
12126 TCS	80
12126 WPSC	63
12126-1	65
12126-1PP	70
12126-12CHC	93
12126-12CHSC	97
12126-12SC	95
12126-4CHC	139
12126-4QT	141
12126-4XACHC	201
12126-4XFCHQRC	261
12126-4XFCHSC	259
12126-4XFLC	257
12126-4XSCHC	199
12126-4XSQT	203
12126-4XSS6CHC	199
121260 G	10
121260 G NK	10
121260 GGV NK	10
121260 GRT NK	43
121260 GRTGV NK	43
121260 HS	16
121260 HS NK	16
121272 G	10
121272 G NK	10
121272 GGV NK	10
121272 GRT NK	43
121272 GRTGV NK	43
12128 RTC	81
12128 RTHC	58
12128 RTHC NK	58
12128 RTSC	57

Catalog Number	Page Number
12128 RTSC NK	57
12128 RTSCGV NK	57
12128 SC	52
12128 SC NK	52
12128 SCG	61
12128 SCGV NK	52
12128 WPSC	63
12128-1	65
121296 GRT NK	43
121296 GRTGV NK	43
12246-12	106
12248-12	106
122AMK	159, 217
124AMK	159, 217
126-12LAHM	30
126-12LAHW	30
126-12 LASD	30
126-12LBC	31
126-12LC	30
126-12LCF	27
126-12LCP	31
126-12LE15A	29
126-12LE45A	29
126-12LE45B	29
126-12LE45C	29
126-12LE9A	28
126-12LE9B	28
126-12LE9C	28
126-12LN1	28
126-12LN2	28
126-12LN3	28
126-12LSP	31
126-12LTA	29
126-12LTF	27
12604-12LW	27
12606-12LW	27
12612-12LW	27
126120-12LW	27
12624-12LW	27
12636-12LW	27
1264 SC	51
1264 SC NK	51
1264 SCGV NK	51
1264-12CHC	93
1264-4QT	141
12644-12LR	30
12648-12LW	27
1266 SC NK	52
12660-12LW	27
12666-12LR	30
128 SCF	53
128 TCF	80
128 TCS	80
128 WB	413
1284 HC	54
1284 HC NK	54
1284 RTSC	57
1284 RTSC NK	57
1284 SC	51
1284 SC NK	51
1284 SCGV	51
1284 SCGV NK	51
1284 TCF	80
1284 TCS	80
1286 RTHC	58
1286 RTHC NK	58
1286 RTSC	57
1286 SC NK	52
1286 SCGV NK	52
1286 TCF	80
1286 TCS	80
1286 WPSC	63
14TB	441
14TS	440
1412TB	441
1412TS	440
14124-1	65
14126-FTC	103
14126-SDF	265
14126-SDFQR	267
14126-SDFQRCC	269
14126-1	65
14126-12CHC	93
14126-12CHCS	93
14126-12CHQRC	99
14126-12CHSC	97
14126-12LC	91
14126-12SC	95
14126-4CHC	139
14126-4LC	137
14126-4QT	141
14126-4XACHC	201
14126-4XALC	197
14126-4XFCHQRC	261
14126-4XFCHQRCW	263
14126-4XFCHSC	259
14126-4XFLC	257
14126-4XSCHC	199
14126-4XSLC	195
14126-4XSQT	203
14126-4XSS6CHC	199
14126-4XSS6LC	195
14128-SDF	265
14128-SDFQR	267
14128-SDFQRCC	269
14128-1	65
14128-12CHC	93
14128-4QT	141
14128-4XSQT	203
1414120 GRT NK	43
1414120 GRT GV NK	43
141448 GRT NK	43
141448 GRTGV NK	43
141472 GRT NK	43
141472 GRT GV NK	43
141496 GRT NK	43
141496 GRT GV NK	43
1432-4XFSC	271
1476-4XFCHQRC	261
1476-4XFCHQRCW	263

Catalog Number	Page Number
1476-4XFCHSC	259
1476-4XFLC	257
1486-12CHC	93
1486-4QT	141
15124 RTSC	57
15154 SC NK	51
15154 SCGV	51
15156 SC NK	52
15156 SCGV NK	52
16DR1P	156, 214
16DR3P	156, 214
16DRCP	156, 214
16GS1	156, 214
16MC	155, 213
16PMK	159, 217
16S	442
16TB	441
16TS	440
16TS12	442
16URMA	157, 215
16106-12CHC	93
16106-4QT	143
1612DF	155, 213
1612P (GP)	154, 212
1612PSS4	154, 212
1612SP	155, 213
1612 TCF	80
1612 TCS	80
1612 WB	413
161210-12	107
161210-SD	146
161210-SDLG	146
161210-SDW	146
16124 RTSC	57
16124 RTSC NK	57
16124 SC	51
16124 SC NK	51
16124 SCGV	51
16124 SCGV NK	51
16124 TCF	80
16124 TCS	80
16126-1PP	70
16126-FM	151
16126 HC	54
16126 HC NK	54
16126RHC	74
16126 RTSC	57
16126 RTSC NK	57
16126 SC	52
16126 SC NK	52
16126 SCG	61
16126 SCGV	52
16126 SCGV NK	52
16126-SD	146
16126-SDLG	146
16126-SDSS4	209
16126-SDSS6	210
16126-SDW	146
16126-SDWLG	146
16126-SDWSS4	209
16126 TCF	80
16126 TCS	80
16126 WPSC	63
16126-1	67
16126-12	106
16126-12TE	109
16126-4	144
16126-4XA	206
16126-4XS	205
16126-4XSS6	205
16126-SDLG	146
16126-SDWLG	146
16128 SC	52
16128 SC NK	52
16128 SCGV NK	52
16128-SD	146
16128-SDLG	146
16128-SDW	146
16128-SDWLG	146
16128-SDSS4	209
16128-SDSS6	210
16128-SDW	146
16128-1	67
16128-12	106
16128-4	144
16128-4XA	206
16128-4XS	205
16128-4XSS6	205
1614TB	441
1614TS	440
161410-12CHC	93
161410-4QT	141
161410-4XSQT	203
16146-FTC	103
16146-12CHC	93
16146-12CHCS	93
16146-12CHQRC	99
16146-12LC	91
16146-12SC	95
16146-4CHC	139
16146-4LC	137
16146-4QT	141
16146-4XACHC	201
16146-4XALC	197
16146-4XFCHQRC	261
16146-4XFCHQRCW	263
16146-4XFCHSC	259
16146-4XFLC	257
16146-4XSCHC	199
16146-4XSLC	195
16146-4XSQT	203
16146-4XSS6CHC	199
16146-4XSS6LC	195
16148-SDF	265
16148-SDFQR	267
16148-SDFQRCC	269
16148-12CHC	93
16148-4QT	141
1616P (GP)	154, 212
1616PSS4	154, 212

Catalog Number	Page Number
1616 SCF	53
1616SP	155, 213
161610-SD	146
161610-SDLG	146
16164 RTSC	57
16164 RTSC NK	57
16164 SC	51
16164 SC NK	51
16164 SCGV	51
16166 HC	54
16166 HC NK	54
16166RHC	74
16166 RTSC	57
16166 RTSC NK	57
16166 SC	52
16166 SC NK	52
16166 SCG	61
16166 SCGV	52
16166 SCGV NK	52
16166-SD	146
16166-SDLG	146
16166-SDSS4	209
16166-SDSS6	210
16166-1	67
16166-12	106
16166-4	144
16166-4XA	206
16166-4XS	205
16166-4XSS6	205
16168-SD	146
16168-SDLG	146
16168-SDSS4	209
16168-SDSS6	210
16168-12	106
1620SP	155, 213
162010-SD	146
162010-SDLG	146
16206-1	67
16206-12	106
16206-4	144
16206-4XS	205
16206-4XSS6	205
16206-SD	146
16206-SDLG	146
16208-12	106
16208-SD	146
16208-SDLG	146
16208-SDSS4	209
16208-SDSS6	210
1732-4XFSC	271
1812 SCF	53
1812 TCF	80
1812 TCS	80
1812 WB	413
181210 RTSC	57
181210 SC	53
181210 SC NK	53
181210 SCGV NK	53
18124 HC	54
18124 HC NK	54
18124 RTSC	57
18124 SC	51
18124 SC NK	51
18124 SCGV	51
18124 SCGV NK	51
18124 TCF	80
18124 TCS	80
18126 HC	54
18126 HC NK	54
18126 RTC	81
18126 RTHC	58
18126 RTHC NK	58
18126 RTSC	57
18126 RTSCGV NK	57
18126 RTSC NK	57
18126 SC	52
18126 SC NK	52
18126 SCGV	52
18126 SCGV NK	52
18126 TCF	80
18126 TCS	80
18126 WPSC	63
18128 RTSC	57
18128 RTSC NK	57
18128 SC	52
18128 SC NK	52
18128 SCGV NK	52
1815 TCF	80
1815 TCS	80
1815 WB	413
18154 SC NK	51
18154 SCGV	51
18154 TCF	80
18154 TCS	80
18156 SC NK	52
18156 SCGV NK	52
18156 TCF	80
18156 TCS	80
181610-SDF	265
181610-SDFQR	267
18168-4XFCHQRC	261
18168-4XFCHQRCW	263
18168-4XFCHSC	259
18168-4XFLC	257
1818 SCF	53
1818 SCS	53
1818 TCF	80
1818 TCS	80
1818 WB	413
181810 RHC	74
181810 RTSC	57
181810 RTSC NK	57
181810 SC	53
181810 SC NK	53
181810 SCGV NK	53
181810 RHC	74
181812 SC	53
181812 SC NK	53
181812 SCGV NK	53
18184 RTSC	57

Catalog Number	Page Number
18184 RTSC NK	57
18184 SC	51
18184 SC NK	51
18184 SCGV	51
18184 SCGV NK	51
18184 TCF	80
18184 TCS	80
18184 WPSC	63
18186 HC	54
18186 HC NK	54
18186 RHC	74
18186 RTC	81
18186 RTSC	57
18186 RTSC NK	57
18186 RTSCGV	57
18186 RTSCGV NK	57
18186 SC	52
18186 SC NK	52
18186 SCG	61
18186 SCGV	52
18186 SCGV NK	52
18186 TCF	80
18186 TCS	80
18186 WPSC	63
18188 RTC	81
18188 RTHC	58
18188 RTHC NK	58
18188 RTSC	57
18188 RTSC NK	57
18188 RTSCGV NK	57
18188 SC	52
18188 SC NK	52
18188 SCGV NK	52
18188 WPSC	63
18249 RTCT	84
19URMA	157, 215
20DR1P	156, 214
20DR3P	156, 214
20DRCP	156, 214
20GS1	156, 214
20MC	155, 213
20PMK	159, 217
20S	442
20TS16	442
20TS20	442
20126-1	65
20126-12	106
20128-12	106
2016DF	155, 213
2016P (GP)	154, 212
2016PSS4	154, 212
2016SP	155, 213
201610-12	107
201610-4	144
201610-4XA	207
201610-4XS	205
201610-4XSS6	205
201610-SD	146
201610-SDF	265
201610-SDFQR	267
201610-SDLG	146
201610-SDSS4	209
201610-SDSS6	210
201610-SDW	146
201610-SDWLG	146
201612-12	107
201612-4XF	277
20166-FM	151
20166RHC	74
20166 SCG	61
20166-SD	146
20166-SDLG	146
20166-SDSS4	209
20166-SDSS6	210
20166-SDW	146
20166-SDWLG	146
20166-SDWSS4	209
20166-1	67
20166-1PP	70
20166-12	106
20166-12TE	109
20166-4	144
20166-4XA	206
20166-4XS	205
20166-4XSS6	205
20167-12CHSC	101
20168-SD	146
20168-SDLG	146
20168-SDSS4	209
20168-SDSS6	210
20168-SDW	146
20168-SDWLG	146
20168-SDWSS4	209
20168-1	67
20168-12	106
20168-4	144
20168-4XA	206
20168-4XFCHQRC	261
20168-4XFCHQRCW	263
20168-4XFCHSC	259
20168-4XFLC	257
20168-4XS	205
20168-4XSS6	205
2020DF	155, 213
2020P (GP)	154, 212
2020PSS4	154, 212
2020SP	155, 213
202010-12	107
202010-SD	146
202010-SDLG	146
202010-SDW	146
202010-SDWLG	146
202012-SD	146
202012-SDLG	146
202012-SDSS4	209
202012-SDSS6	210
202012-SDW	146
202012-SDWLG	146
202012-SDWSS4	209
20206-FM	151

Catalog Number	Page Number
20206-SD	146
20206-SDLG	146
20206-SDSS4	209
20206-SDSS6	210
20206-SDW	146
20206-SDWLG	146
20206-SDWSS4	209
20206-1	67
20206-12	106
20206-12TE	109
20206-4	144
20206-4XA	206
20206-4XS	205
20206-4XSS6	205
20207-12CHSC	101
20208RHC	74
20208 SCG	61
20208-SD	146
20208-SDLG	146
20208-SDSS4	209
20208-SDSS6	210
20208-SDW	146
20208-SDWLG	146
20208-SDWSS4	209
20208-1	67
20208-12	106
20208-4	144
20208-4XS	205
20208-4XSS6	205
2024SP	155, 213
202410-SD	146
202410-SDLG	146
20246-12	106
20248-1	67
20248-12	106
20248-4	144
20248-4XS	205
20248-4XSS6	205
20248-SD	146
20248-SDLG	146

Catalog Number	Page Number
203611 HRTCT	87
22 C	11
22 E	11
22 E NK	11
22 EGV	11
22 EGV NK	11
22 FH	12, 18
22 FTF	11, 17
22 FTFGV	11
22 GF	11
22 GFGV	11
22 HSC	17
22 HSCA	17
22 HSCU	17
22 HSE	17
22 HSE NK	17
22 HSF	18
22 HSL IN	19
22 HSL OUT	19
22 HSL SIDE	19
22 HST	20
22 HSX	20
22 L COMBO	13
22 L COMBOGV	13
22 L SIDE	13
22 L SWEEP	13
22 L SWEEPGV	13
22 LTX	12
22 LTXGV	12
22 T	14
22 TGV	14
22 X	14
22 XGV	14
22-12BK	12, 18, 31
22-12LAHM	30
22-12LAHW	30
22-12LASD	30
22-12LBC	31
22-12LBH	31
22-12LC	30

Catalog Number	Page Number
22-12LCF	27
22-12LCP	31
22-12LDH	31
22-12LE15A	29
22-12LE45A	29
22-12LE45B	29
22-12LE45C	29
22-12LE9A	28
22-12LE9AC	28
22-12LE9B	28
22-12LE9C	28
22-12LE9TC	28
22-12LE9TCC	28
22-12LJB	30
22-12LN1	28
22-12LN2	28
22-12LN3	28
22-12LSP	31
22-12LTA	29
22-12LTC	29
22-12LTF	27
22-12LTSC	27
22-12LTSCC	27
2204-12LW	27
2206-12LW	27
2212 G	9
2212 G NK	9
2212 GGV NK	9
2212 HS	16
2212 HS NK	16
2212-12LW	27
22120 G	9
22120 G NK	9
22120 GGV	9
22120 GGV NK	9
22120 HS	16
22120 HS NK	16
22120-12LW	27
2224 G	9
2224 G NK	9

Catalog Number	Page Number
2224 GGV	9
2224 GGV NK	9
2224 HS	16
2224 HS NK	16
2224-12LW	27
2233 FR	12, 17
2236 G	9
2236 G NK	9
2236 GGV	9
2236 GGV NK	9
2236 HS	16
2236 HS NK	16
2236-12LW	27
2245 HSL COMBO	19
2245 HSL SIDE	19
2245 L COMBO	14
2245 L COMBOGV	14
2245 L SIDE	14
2248 G	9
2248 G NK	9
2248 GGV NK	9
2248 HS	16
2248 HS NK	16
2248-12LW	27
2260 G	9
2260 G NK	9
2260 GGV	9
2260 GGV NK	9
2260 HS	16
2260 HS NK	16
2260-12LW	27
2272 HS	16
2272 HS NK	16
24DR1P	156, 214
24DR3P	156, 214
24DRCP	156, 214
24GS1	156, 214
24MC	155, 213
24PMK	159, 217
24S	442
24TS20	367, 442
24TS24	367, 442
2412 TCF	80
2412 TCS	80
2412 WB	413
241210 SC NK	53
241210 SCGV NK	53
241210-12	107
241210-4XF	277
241212 SC	53
241212 SC NK	53
241212 SCGV NK	53
24124 SC	51
24124 SC NK	51
24124 SCGV	51
24124 TCF	80
24124 TCS	80
24126 RTC	81
24126 RTSC	57
24126 RTSC NK	57
24126 SC NK	52
24126 SCGV NK	52
24126 TCF	80
24126 TCS	80
24126-12	106
24126-4	144
24126-4XF	277
24126-4XS	205
24126-4XSS6	205
24128 SC	52
24128 SC NK	52
24128 SCGV NK	52
24128-12	106
2416P (GP)	154, 212
2416PSS4	154, 212
2416SP	155, 213
241610-SD	146
241610-SDLG	146
24166-1	67
24166-12	106
24166-4	144
24166-4XS	205
24166-4XSS6	205
24166-SD	146
24166-SDLG	146
24168 RTSC	57
24168 RTSC NK	57
24168-SD	146
24168-SDLG	146
24168-SDSS4	209
24168-SDSS6	210
24168-12	106
24168-4XA	206
24168-4XS	205
24168-4XSS6	205
2418 SCF	53
2418 TCF	80
2418 TCS	80
2418 WB	413
241810 RTSC	57
241810 RTSC NK	57
241810 SC	53
241810 SC NK	53
241810 SCGV NK	53
241812 SC	53
241812 SC NK	53
241812 SCGV NK	53
24184 SC NK	51
24184 SCGV	51
24184 TCF	80
24184 TCS	80
24186 HC	54
24186 HC NK	54
24186 RTC	81
24186 RTSC	57
24186 RTSC NK	57
24186 SC	52
24186 SC NK	52
24186 SCGV	52
24186 SCGV NK	52

Catalog Number	Page Number
24186 TCF	80
24186 TCS	80
24186 WPSC	63
24188 RTHC	58
24188 RTHC NK	58
24188 RTSC	57
24188 RTSC NK	57
24188 SC	52
24188 SC NK	52
24188 SCGV NK	52
2420DF	155, 213
2420P (GP	154, 212
2420PSS4	154, 212
2420SP	155, 213
242010-1	67
242010-12	107
242010-4	144
242010-4XA	207
242010-4XS	205
242010-4XS3PT	218
242010-4XSS6	205
242010-4XSS63PT	218
242010-43PT	160
242010-SD	146
242010-SDLG	146
242010-SDW	146
242010-SDWLG	146
242012-1	67
242012-12	107
242012-SD	146
242012-SDLG	146
242012-SDSS4	209
242012-SDSS6	210
242012-SDW	146
242012-SDWLG	146
242016-12	107
242016-SD	148
24206 SC NK	52
24206 SCGV NK	52
24206-SD	146
24206-SDLG	146
24206-SDW	146
24206-1	67
24206-1PP	70
24206-12	106
24206-12TE	109
24206-4	144
24206-4XA	206
24206-4XS	205
24206-4XS3PT	218
24206-4XSS6	205
24206-4XSS63PT	218
24206-43PT	160
24207-12CHSC	101
24208-FM	151
24208RHC	74
24208 SC NK	52
24208 SCG	61
24208 SCGV NK	52
24208-SD	146
24208-SDLG	146
24208-SDSS4	209
24208-SDSS6	210
24208-SDW	146
24208-SDWSS4	209
24208-1	67
24208-12	106
24208-4	144
24208-4XA	206
24208-4XF	277
24208-4XS	205
24208-4XS3PT	218
24208-4XSS6	205
24208-4XSS63PT	218
24208-43PT	160
24209-12CHSC	101
2424DF	155, 213
2424P (GP)	154, 212
2424PSS4	154, 212
2424 SCF	53
2424 SCS	53
2424SF	157, 215
2424SP	155, 213
2424 TCF	80
2424 TCS	80
2424 WB	413
242410 RHC	74
242410 RTHC	58
242410 RTHC NK	58
242410 RTSC	57
242410 RTSC NK	57
242410 RTSCGV NK	57
242410 SC	53
242410 SC NK	53
242410 SCGV NK	53
242410-SD	146
242410-SDLG	146
242410-SDW	146
242410-SDWLG	146
242410-12	107
242410-4D3PT	162
242410-4XF	277
242410-RHCF	275
242411 RTCT	84
242412 RTSC	57
242412 RTSC NK	57
242412 RTSCGV NK	57
242412 SC	53
242412 SC NK	53
242412 SCG	61
242412 SCGV NK	53
242412-1	67
242412-12	107
242412-4XA	207
242412-4XF	277
242412-4XS	205
242412-4XSS6	205
242412-SCG	61
242412-SD	146
242412-SDLG	146

Catalog Number	Page Number
242412-SDSS4	209
242412-SDSS6	210
242412-SDW	146
242412-SDWLG	146
242412-4XS3PT	219
242412-4XSS63PT	219
242412-43PT	163
242416-12	107
242416-SD	148
242416-SDLG	148
242416-SDW	148
242416-SDWLG	148
242416-SDSS4	209
242416-SDSS6	210
242420-SD	148
242420-SDLG	148
242420-SDW	148
242420-SDWLG	148
24244 RTSC	57
24244 RTSC NK	57
24244 SC	51
24244 SC NK	51
24244 SCGV	51
24244 SCGV NK	51
24244 TCF	80
24244 TCS	80
24246 HC	54
24246 HC NK	54
24246 RTC	81
24246 RTSC	57
24246 RTSC NK	57
24246 RTSCGV NK	57
24246 SC	52
24246 SC NK	52
24246 SCG	61
24246 SCGV	52
24246 SCGV NK	52
24246-SD	146
24246-SDLG	146
24246-SDW	146
24246-SDWLG	146
24246 TCF	80
24246 TCS	80
24246 WPSC	63
24246-1	67
24246-12	106
24246-12TE	109
24246-4	144
24246-4XS	205
24246-4XSS6	205
24248-FM	151
24248RHC	74
24248 RTC	81
24248 RTHC	58
24248 RTHC NK	58
24248 RTSC	57
24248 RTSC NK	57
24248 RTSCGV NK	57
24248 SC	52
24248 SC NK	52
24248 SCG	61
24248 SCGV NK	52
24248-SD	146
24248-SDLG	146
24248-SDSS4	209
24248-SDSS6	210
24248-SDW	146
24248-SDWLG	146
24248-SDWSS4	209
24248 WPSC	63
24248-1	67
24248-12	106
24248-4	144
24248-4XA	206
24248-4XS	205
24248-4XS3PT	218
24248-4XSS6	205
24248-4XSS63PT	218
24248-43PT	160
243010-SD	146
243010-SDLG	146
243011 HRTCT	87
243011 RTCT	84
24308-12	106
24308-4	144
24308-4XA	206
24308-4XS	205
24308-4XSS6	205
24308-SD	146
24308-SDLG	146
24329 RTCT	84
243611 RTCT	84
244210-4D3PT	162
24428-12D	110
24428-4XSD3PT	220
24428-TD	155
2442P (GP)	154, 212
2442PSS4	154, 212
244811 HRTCT	87
244811 RTCT	84
24488-12D	110
24488-4XSD3PT	220
25012A	368, 443
25092 A (B)	421
25228 A (B, C, D)	427
25270 A	421
25277 A	421
25278 A	421
25288 A	421
25289 A	421
25345 A	426
25350 A	424
25351 A	419
25352 A	419
25421 A	424
26URMA	157, 215
29645	453
20646	453
3MDBLK	158, 216, 420
3MT1DBLK	420

Catalog Number	Page Number
3MT4DBLKB	423
30GS1	157, 214
30MC	155, 213
30PMK	159, 217
30S	442
30TS20	442
30TS24	442
3015 TCF	80
3015 TCS	80
3015 WB	413
30154 TCF	80
30154 TCS	80
30156 TCF	80
30156 TCS	80
30166-12	106
3018 TCF	80
3018 TCS	80
3018 WB	413
30184 SC NK	51
30184 SCGV	51
30184 SCGV NK	51
30184 TCF	80
30184 TCS	80
30186 SC NK	52
30186 SCGV NK	52
30186 TCF	80
30186 TCS	80
3020P (GP)	154, 212
3020PSS4	154, 212
3020SP	155, 213
302010-RHCF	275
302010-SD	146
302010-SDLG	146
302010-SDSS4	209
302010-SDSS6	210
302010-12	107
302010-4XF	277
302012-4XF	277
30206-1	67
30206-12	106
30206-12TE	109
30206-4	144
30206-4XF	277
30207-12CHSC	101
30208-RHCF	275
30208-SD	146
30208-SDLG	146
30208-1	67
30208-12	106
30208-4	144
30208-4XA	206
30208-4XF	277
30208-4XS	205
30208-4XSS6	205
30209-12CHSC	101
3024DF	155, 213
3024P (GP)	154, 212
3024PSS4	154,212
3024SF	157, 215
3024SP	155, 213
3024 TCF	80
3024 TCS	80
3024 WB	413
302410 RHC	74
302410-RHCF	275
302410 RTSC	57
302410 RTSC NK	57
302410 SC NK	53
302410 SCGV NK	53
302410-SD	146
302410-SDLG	146
302410-SDW	146
302410-SDWLG	146
302410 WPSC	63
302410-1	67
302410-12	107
302410-4	144
302410-4XF	277
302410-4XS	205
302410-4XSS6	205
302412-RHCF	275
302412 RTSC	57
302412 RTSC NK	57
302412 SC	53
302412 SC NK	53
302412 SCGV NK	53
302412-SD	148
302412-SDLG	148
302412-SDSS4	209
302412-SDSS6	210
302412-SDW	148
302412-SDWLG	148
302412-SDWSS4	209
302412-1	67
302412-12	107
302412-4	144
302412-4XA	207
302412-4XF	277
302412-4XS	205
302412-4XS3PT	219
302412-4XSS6	205
302412-4XSS63PT	219
302412-43PT	161
302416-SD	148
302416-SDSS4	209
302416-SDSS6	210
302416-12	107
302416-4XS	205
302416-4XSS6	205
302420-SD	148
302420-SDLG	148
302420-SDW	148
302420-SDWLG	148
302420-12	107
302424-12	107
30244 SC	51
30244 SC NK	51
30244 SCGV	51
30244 SCGV NK	51
30244 TCF	80

Catalog Number	Page Number
30244 TCS	80
30246 HC	54
30246 HC NK	54
30246 RTC	81
30246 SC	52
30246 SC NK	52
30246 SCGV	52
30246 SCGV NK	52
30246 TCF	80
30246 TCS	80
30246-1	67
30246-12	106
30246-12TE	109
30246-4	144
30246-4XS	205
30246-4XSS6	205
30247-12CHSC	101
30248-FM	151
30248RHC	74
30248 SC	52
30248 SC NK	52
30248 SCGV	52
30248 SCGV NK	52
30248-SD	146
30248-SDLG	146
30248-SDSS4	209
30248-SDSS6	210
30248-SDW	146
30248-SDWLG	146
30248-SDWSS4	209
30248-1	67
30248-12	106
30248-4	144
30248-4XA	206
30248-4XF	277
30248-4XS	205
30248-4XS3PT	218
30248-4XSS6	205
30248-4XSS63PT	218
30248-43PT	160
30249-12CHSC	101
3030P (GP)	154, 212
3030PSS4	154, 212
3030SP	155, 213
3030 TCF	80
3030 TCS	80
3030 WB	413
303010 RTSC NK	57
303010 SC NK	53
303010 SCGV NK	53
303010-SD	146
303010-SDLG	146
303011 RTCT	84
303012RHC	74
303012 RTSC NK	57
303012 SC NK	53
303012 SCG	61
303012 SCGV NK	53
303012-SD	148
303012-SDLG	148
303012-SDSS4	209
303012-SDSS6	210
303012-12	107
303016 RHC	74
303016 SC NK	53
30304 SC NK	51
30304 SCGV NK	51
30304 TCF NK	80
30304 TCS NK	80
30306 SC NK	52
30306 SCGV NK	52
30306 TCF NK	80
30306 TCS NK	80
30308 RHC	74
30308 SC NK	52
30308 SCGV NK	52
30308-SD	146
30308-SDLG	146
30308-SDSS4	209
30308-SDSS6	210
30308-1	67
30308-12	106
30308-4	144
30308-4XA	206
30308-4XS	205
30308-4XS3PT	218
30308-4XSS6	205
30308-4XSS63PT	218
30308-43PT	160
303611 HRTCT	87
303611 RTCT	84
303614 RTCT	84
303616DRHC	76
30368-12	106
304210-12D	110
304210-4D3PT	162
304210-4XSD3PT	220
304212DRHC	76
3048P (GP)	154, 212
3048PSS4	154, 212
304810-12D	110
304810-4D3PT	162
304810-4XSD3PT	220
304811 HRTCT	87
30488-TD	153
3060P (GP)	154, 212
3060PSS4	154, 212
306010-12D	110
306010-4D3PT	162
306010-4XSD3PT	220
306012-TD	153
32170	158, 216, 418
32171	158, 216, 418
32172	418
33 C	11
33 E	11
33 E NK	11
33 FH	12
33 FL IN	13
33 FL OUT	13

Catalog Number	Page Number
33 FL SIDE	13
33 FTF	11, 17
33 GF	11
33 L COMBO	13
33 L SIDE	13
33 L SWEEP	13
33 LTX	12
33 T	14
33 X	14
33-12BK	12, 18
332-4XFSC	271
3312 G NK	9
33120 G NK	9
3324 G NK	9
3336 G NK	9
3344 FR	12, 17
3345 L COMBO	14
3345 L SIDE	14
3348 G NK	9
3360 G NK	9
3372 G NK	9
36GS3	156, 214
36MC	155, 213
36S	442
36TS24	442
36TS30	442
3624P (GP)	154, 212
3624PSS4	154, 212
3624SF	157, 215
3624SP	155, 213
3624 TCF	80
3624 TCS	80
3624 WB	413
362410 RTHC	58
362410 RTHC NK	58
362410 SC NK	53
362410 SCGV NK	53
362410-SD	146
362410-SDLG	146
362410-12	107
362410-4XA	207
362410-4XS	205
362410-4XSS6	205
362412RHC	74
362412 RTSC	57
362412 RTSC NK	57
362412 SC	53
362412 SC NK	53
362412 SCGV NK	53
362412-SD	148
362412-SDLG	148
362412-SDSS4	209
362412-SDSS6	210
362412-12	107
362416-SD	148
362416-4XA	207
36244 TCF	80
36244 TCS	80
36246 HC	54
36246 HC NK	54
36246 RTC	81
36246 SC	52
36246 SC NK	52
36246 SCGV NK	52
36246 TCF	80
36246 TCS	80
36246-1	67
36246-1PP	70
36246-12	106
36246-12TE	109
36246-4	144
36246-4XS	205
36246-4XSS6	205
36247-12CHSC	101
36248 HC	54
36248 HC NK	54
36248 SC	52
36248 SC NK	52
36248 SCGV NK	52
36248-SD	146
36248-SDLG	146
36248-SDSS4	209
36248-SDSS6	210
36248-1	67
36248-12	106
36248-4	144
36248-4XA	206
36248-4XS	205
36248-4XS3PT	218
36248-4XSS6	205
36248-4XSS63PT	218
36248-43PT	160
36249-12CHSC	101
3630P (GP)	154, 212
3630PSS4	154, 212
3630SP	155, 213
3630 TCF	80
3630 TCS	80
3630 WB	413
363010-RHCF	275
363010-SD	146
363010-SDLG	146
363010-12	107
363010-4	144
363010-4XA	207
363010-4XF	277
363010-4XS	205
363010-4XS3PT	218
363010-4XSS6	205
363010-4XSS63PT	218
363010-43PT	160
363012RHC	74
363012-RHCF	275
363012 RTHC NK	58
363012 RTSC NK	57
363012-SD	148
363012-SDLG	148
363012-SDSS4	209
363012-SDSS6	210
363012-1	67

Catalog Number	Page Number
363012-12	107
363012-4	144
363012-4XA	207
363012-4XF	277
363012-4XS	205
363012-4XS3PT	219
363012-4XSS6	205
363012-4XSS63PT	219
363012-43PT	161
363016-SD	148
363016-SDLG	148
363016-12	107
363016-4	144
363016-4XA	207
363016-4XS	205
363016-4XSS6	205
363020-SD	148
363020-SDLG	148
363020-12	107
36304 TCF NK	.80
36304 TCS NK	.80
36306 SC NK	.52
36306 SCGV NK	.52
36306 TCF NK	.80
36306 TCS NK	.80
36306-1	.67
36306-1PP	.70
36306-12	106
36308-RHCF	275
36308 SC NK	.52
36308 SCGV NK	.52
36308-SD	146
36308-SDLG	146
36308-SDSS4	209
36308-SDSS6	210
36308-1	.67
36308-12	106
36308-12TE	109
36308-4	144
36308-4XA	206
36308-4XF	277
36308-4XS	205
36308-4XS3PT	218
36308-4XSS6	205
36308-4XSS63PT	218
36308-43PT	160
3636P (GP)	154, 212
3636PSS4	154, 212
3636SP	155, 213
3636 TCF	.80
3636 TCS	.80
3636 WB	413
363610 RHC	.74
363610 SC NK	.53
363610 SCGV NK	.53
363610-SD	146
363610-SDLG	146
363611 HRTCT	.87
363611 RTCT	.84
363612RHC	.74
363612 RTSC NK	.57
363612 RTSCGV NK	.57
363612 SC NK	.53
363612 SCG	.61
363612 SCGV NK	.53
363612-SD	148
363612-SDLG	148
363612-SDSS4	209
363612-SDSS6	210
363612-12	107
363612-4XS	205
363612-4XS3PT	219
363612-4XSS6	205
363612-4XSS63PT	219
363612-43PT	161
363616 SC NK	.53
363616 SCGV NK	.53
36364 TCF NK	.80
36364 TCS NK	.80
36366 RTSC NK	.57
36366 SC NK	.52
36366 SCGV NK	.52
36366 TCF NK	.80
36366 TCS NK	.80
36368 RTSC NK	.57
36368 SC NK	.52
36368 SCGV NK	.52
36368-SD	146
36368-SDLG	146
36368 SDSS4	209
36368 SDSS6	210
36368-12	106
364211 RTCT	.84
364212-12D	110
364212-4XSD3PT	220
364216DRHC	.76
364811 HRTCT	.87
364811 RTCT	.84
364812DRHC	.76
364812-TD	153
364812-12D	110
364812-4D3PT	162
364812-4XFD	279
364812-4XSD3PT	220
364814 RTCT	.84
366012-12D	110
366012-TD	153
366012-4D3PT	162
366012-4XSD3PT	220
4MT4HXLKBM	423
42GS3	156, 214
42MC	155, 213
42S	442
42TS30	442
42248-1	.67
42248-12	106
4230P (GP)	154, 212
4230PSS4	154, 212
423010-SD	146
423010-SDSS4	209

Catalog Number	Page Number
423010-SDSS6	210
423010-12	107
423010-4XA	207
423010-4XS	205
423010-4XS3PT	218
423010-4XSS6	205
423010-4XSS63PT	218
423012-12	107
423012RHC	74
423012-SD	148
423012-SDLG	148
423013-1	69
42308-12	106
42308-12TE	109
42308-4	144
42308-4XS	205
42308-4XSS6	205
42309-1	69
4236P (GP)	154, 212
4236PSS4	154, 212
423610-SD	146
423610-SDLG	146
423610-12	107
423612RHC	74
423612-SD	148
423612-SDLG	148
423612-SDSS4	209
423612-SDSS6	210
423612-12	107
423612-4XS3PT	219
423612-4XSS63PT	219
423613-1	69
423616-SD	148
423616-SDSS4	209
423616-SDSS6	210
423616-12	107
42368-12	106
42368-4	144
42368-4XA	206
42368-4XS	205
42368-4XSS6	205
42369-1	69
424211 RTCT	84
424212-12D	110
424212-4XSD3PT	220
424812-12D	110
424812-4XSD3PT	220
426012-12D	110
426012-4XSD3PT	220
44 C	11
44 E	11
44 E NK	11
44 EGV	11
44 EGV NK	11
44 FH	12, 18
44 FL IN	13
44 FL OUT	13
44 FL SIDE	13
44 FTF	11, 17
44 FTFGV	11
44 GF	11
44 GFGV	11
44 HSC	17
44 HSCA	17
44 HSCU	17
44 HSE	17
44 HSE NK	17
44 HSF	18
44 HSL IN	19
44 HSL OUT	19
44 HSL SIDE	19
44 HST	20
44 HSX	20
44 L COMBO	13
44 L COMBOGV	13
44 L SIDE	13
44 L SWEEP	13
44 L SWEEPGV	13
44 LTX	12
44 LTXGV	12
44 SCF	53
44 T	14
44 TGV	14
44 X	14
44 XGV	14
44-12BH	35
44-12BK	12, 18, 24, 31, 34, 38
44-12DH	35
44-12FBC	34
44-12FC	35
44-12FCF	34
44-12FCP	34
44-12FE45	35
44-12FE9	35
44-12FFF	35
44-12FGK	34
44-12FN1	34
44-12FN2	34
44-12FN3	34
44-12FN6	34
44-12FT	35
44-12FTF	33
44-12LAFW	30
44-12LAHM	30
44-12LAHW	30
44-12LASD	30
44-12LBC	31
44-12LBH	31
44-12LC	30
44-12LCF	27
44-12LCP	31
44-12LDH	31
44-12LE15A	29
44-12LE45A	29
44-12LE45B	29
44-12LE45C	29
44-12LE9A	28
44-12LE9AC	28
44-12LE9B	28
44-12LE9C	28

Catalog Number	Page Number
44-12LE9TC	28
44-12LE9TCC	28
44-12LJB	30
44-12LN1	28
44-12LN2	28
44-12LN3	28
44-12LSP	31
44-12LTA	29
44-12LTC	29
44-12LTF	27
44-12LTSC	27
44-12LTSCC	27
44-3RAHSC	22
44-3RAHSE NK	23
44-3RAHSF	23
44-3RAHSL SIDE	23
44-3RAHST	23
44-3RASCX	23
44-3RBKA	24
44-3RHSC	22
44-3RHSE NK	23
44-3RHSF	23
44-3RHSL SIDE	23
44-3RHST	23
44-3RSCX	24
44-4XSBH	39
44-4XSDH	39
44-4XSFBC	38
44-4XSFC	39
44-4XSFCF	38
44-4XSFCP	38
44-4XSFE45	39
44-4XSFE9	39
44-4XSFFF	39
44-4XSFGK	38
44-4XSFN1	38
44-4XSFN2	38
44-4XSFN3	38
44-4XSFN6	38
44-4XSFT	39
44-4XSFTF	37
4404-12LW	27
4406-12LW	27
4412 G	9
4412 G NK	9
4412 GGV	9
4412 GGV NK	9
4412 GRT	43
4412 GRT NK	43
4412 GRTGV NK	43
4412 GTGV NK	41
4412 HS	16
4412 HS NK	16
4412-12FW	33
4412-12LW	27
4412-12WT	45
4412-3RHS NK	22
4412-3RAHS NK	22
4412-4XSFW	37
4412-4XSWT	47
44120 G	9
44120 G NK	9
44120 GGV	9
44120 GGV NK	9
44120 GRT NK	43
44120 GRTGV NK	43
44120 HS	16
44120 HS NK	16
44120-3RHS NK	22
44120-3RAHS NK	22
44120-12FW	33
44120-12LW	27
44120-4XSFW	37
4418 G	9
4418 G NK	9
4418 GGV NK	9
4418 GRT	43
4418 GRT NK	43
4418-12WT	45
4418-4XSWT	47
4422-12LR	30
4424 G	9
4424 G NK	9
4424 GGV	9
4424 GGV NK	9
4424 GRT	43
4424 GRT NK	43
4424 GRTGV NK	43
4424 GTGV NK	41
4424 HS	16
4424 HS NK	16
4424-12FW	33
4424-12LW	27
4424-12WT	45
4424-4XSFW	37
4424-4XSWT	47
443 SC	51
443 SC NK	51
443 SCGV	51
443 SCGV NK	51
443-12CHC	93
443-12LC	91
443-12SC	95
443-4CHC	139
443-4LC	137
443-4QT	141
443-4XALC	197
443-4XSLC	195
443-4XSS6LC	195
4430-12WT	45
4430-4XSWT	47
4436 G	9
4436 G NK	9
4436 GGV	9
4436 GGV NK	9
4436 GRT	43
4436 GRT NK	43
4436 GRTGV NK	43
4436 GTGV NK	41
4436 HS	16

Catalog Number	Page Number
4436 HS NK	16
4436-12FW	33
4436-12LW	27
4436-12WT	45
4436-4XSFW	37
4436-4XSWT	47
444 RTSC	57
444 RTSC NK	57
444 RTSCGV	57
444 SC	51
444 SC NK	51
444 SCG	61
444 SCGV	51
444 SCGV NK	51
444 WPSC	63
444-12CHC	93
444-12LC	91
444-12SC	95
444-4QT	141
4445 HSL COMBO	19
4445 HSL SIDE	19
4445 L COMBO	14
4445 L COMBOGV	14
4445 L SIDE	14
4448 G	9
4448 G NK	9
4448 GGV	9
4448 GGV NK	9
4448 GRT	43
4448 GRT NK	43
4448 GRTGV NK	43
4448 GTGV NK	41
4448 HS	16
4448 HS NK	16
4448-12FW	33
4448-12LW	27
4448-12WT	45
4448-4XSFW	37
4448-4XSWT	47
4460 G	9
4460 G NK	9
4460 GGV	9
4460 GGV NK	9
4460 GRT	43
4460 GRT NK	43
4460 GRTGV NK	43
4460 GTGV NK	41
4460 HS	16
4460 HS NK	16
4460-3RHS NK	22
4460-3RAHS NK	22
4460-12FW	33
4460-12LW	27
4460-12WT	45
4460-4XSFW	37
4460-4XSWT	47
4466 FR	12, 17
4466-3RASCR	24
4466-3RSCR	24
4472 G	9
4472 G NK	9
4472 GGV	9
4472 GGV NK	9
4472 GRT	43
4472 GRT NK	43
4472 GRTGV NK	43
4472 GTGV NK	41
4472 HS	16
4472 HS NK	16
4472-12WT	45
4472-4XSWT	47
4488-3RASCR	24
4488-3RSCR	24
4496 GRT NK	43
4700-CC	437
4700-CC2	437
48GS3	156, 214
48MC	155, 213
48S	442
48TS36	442
4824P (GP)	154, 212
4824PSS4	154, 212
4824 TCF	80
4824 TCS	80
4824 WB	413
482410-SD	146
482410-SDLG	146
482412-SD	148
482412-SDLG	148
48244 TCF	80
48244 TCS	80
48246 TCF	80
48246 TCS	80
48248-12	106
483010-SD	146
483010-12	107
483010-4	144
483010-4XS	205
483010-4XSS6	205
48308-12	106
4836P (GP)	154, 212
4836PSS4	154, 212
4836 TCF	80
4836 TCS	80
4836 WB	413
483610-SD	146
483610-12	107
483610-4	144
483610-4XS	205
483610-4XS3PT	218
483610-4XSS6	205
483610-4XSS63PT	218
483610-43PT	160
483611-1	69
483612RHC	74
483612-RHCF	275
483612-SD	148
483612-SDLG	148
483612-SDSS4	209
483612-SDSS6	210

Catalog Number	Page Number
483612-12	107
483612-4	144
483612-4XA	207
483612-4XF	277
483612-4XS	205
483612-4XS3PT	219
483612-4XSS6	205
483612-4XSS63PT	219
483612-43PT	161
483613-1	69
483616 RHC	74
483616-RHCF	275
483616-SD	148
483616-SDLG	148
483616-SDSS4	209
483616-SDSS6	210
483616-12	107
483616-4	144
483616-4XA	207
483616-4XF	277
483616-4XS	205
483616-4XS3PT	219
483616-4XSS6	205
483616-4XSS63PT	219
483616-43PT	161
483617-1	69
483620-SD	148
483620-12	107
48364 TCF NK	80
48364 TCS NK	80
48366 SC NK	52
48366 SCGV NK	52
48366 TCF NK	80
48366 TCS NK	80
48368-12	106
48368-12TE	109
48368-4	144
48368-4XA	206
48368-4XS	205
48368-4XS3PT	218
48368-4XSS6	205
48368-4XSS63PT	218
48368-43PT	160
48369-1	69
4848 TCF	80
4848 TCS	80
4848 WB	413
484811 RTCT	84
484812-12D	110
484812-4XSD3PT	220
484812 SC NK	53
484812 SCGV NK	53
484816 SC NK	53
484816 SCGV NK	53
48484 TCF NK	80
48484 TCS NK	80
48486 SC NK	52
48486 SCGV NK	52
48486 TCF NK	80
48486 TCS NK	80
532-4XFSC	271
54428-12FD	112
6MT4SLKBM	423
6.5MT4TLKBM	423
60GS3	156, 214
60MC	155, 213
60S	442
60TS36	442
602418-4FS3PT	174
602418-4XSFS3PT	232
6036P (GP)	154, 212
6036PSS4	154, 212
603610-SD	146
603610-SDLG	146
603610-12	107
603610-4	144
603610-4XS	205
603610-4XSS6	205
603612RHC	74
603612-SD	148
603612-SDLG	148
603612-SDSS4	209
603612-SDSS6	210
603612-12	107
603612-4XA	207
603612-4XF	277
603612-4XS	205
603612-4XS3PT	219
603612-4XSS6	205
603612-4XSS63PT	219
603612-43PT	161
603616-SD	148
603616-SDSS4	209
603616-SDSS6	210
603616-12	107
603616-4	144
603616-4XF	277
603616-4XS	205
603616-4XS3PT	219
603616-4XSS6	205
603616-4XSS63PT	219
603616-43PT	161
603620-SD	148
603620-12	107
603624-4FS3PT	174
603624-4XSFS3PT	232
60368-12	106
60368-12TE	109
60368-4	144
604810-12FD	112
604812-12FD	112
604812-4FDQT	166
604812-4XSFDQT	224
604816-12FD	112
604818-12FSD	115
604818-4XSFDQT	224
604818-4XSFSD3PT	236
604820-12FD	112
604824-12FD	112
60488-12FD	112

Catalog Number	Page Number
606010-12FD	112
606012-12FD	112
606012-4FDQT	166
606012-4XSFDQT	224
606016-12FD	112
606018-4XSFDQT	224
606024-12FD	112
624810-4FD	164
624810-4XAFD	222
624810-4XSFD	222
624810-4XSS6FD	222
624812-4FD3PT	168
624812-4XSFD	222
624812-4XSFD3PT	226
624812-4XSS6FD	222
624812-4XSS6FD3PT	226
624818-4XSFD3PT	226
624818-4XSS6FD3PT	226
626012-4FD	164
626012-4FD3PT	168
626012-4XSFD	222
626012-4XSFD3PT	226
626012-4XSS6FD	222
626012-4XSS6FD3PT	226
64AMK	159, 217
64 C	11
64 E	11
64 E NK	11
64 FTF	11
64 GF	11
64 L COMBO	13
64 L SIDE	13
64 L SWEEP	13
64 LTX	12
64 T	14
64 X	14
6412 G NK	9
64120 G NK	9
6418 G NK	9
6424 G NK	9
643-12CHC	93
643-12CHQRC	99
643-12LC	91
643-12SC	95
643-4CHC	139
643-4LC	137
643-4QT	141
643-4XALC	197
643-4XSLC	195
643-4XSS6LC	195
6436 G NK	9
644 RHC	72
644-FTC	103
644 RTHC	58
644 RTHC NK	58
644 RTSC	57
644 RTSC NK	57
644 SC	51
644 SC NK	51
644 SCGV	51
644 SCGV NK	51
644 WPSC	63
644-12CHC	93
644-12LC	91
644-12SC	95
644-4CHC	139
644-4QT	141
644-4XACHC	201
644-4XFCHQRC	261
644-4XFCHQRCW	263
644-4XFCHSC	259
644-4XFLC	257
644-4XFSC	271
644-4XSCHC	199
644-4XSQT	203
644-4XSS6CHC	199
6445 L COMBO	14
6445 L SIDE	14
6448 G NK	9
6460 G NK	9
6472 G NK	9
66 C	11
66 E	11
66 E NK	11
66 EGV	11
66 EGV NK	11
66 FH	12, 18
66 FL IN	13
66 FL OUT	13
66 FL SIDE	13
66 FTF	11, 17
66 FTFGV	11
66 GF	11
66 GFGV	11
66 HSC	17
66 HSCA	17
66 HSCU	17
66 HSE	17
66 HSE NK	17
66 HSF	18
66 HSL IN	19
66 HSL OUT	19
66 HSL SIDE	19
66 HST	20
66 HSX	20
66 L COMBO	13
66 L COMBOGV	13
66 L SIDE	13
66 L SWEEP	13
66 L SWEEPGV	13
66 LTX	12
66 LTXGV	12
66 SCF	53
66 SCS	53
66 T	14
66 TGV	14
66 X	14
66 XGV	14
66-3RAHSC	22
66-3RAHSE NK	23

Catalog Number	Page Number
66-3RAHSF	23
66-3RAHSL-SIDE	23
66-3RAHST	23
66-3RASCX	24
66-3RBKA	24
66-3RHSC	22
66-3RHSE NK	23
66-3RHSF	23
66-3RHSL-SIDE	23
66-3RHST	23
66-3RSCX	24
66-12BH	35
66-12BK	12, 18, 24, 31, 34, 38
66-12DH	35
66-12FBC	34
66-12FC	35
66-12FCF	34
66-12FCP	34
66-12FE45	35
66-12FE9	35
66-12FFF	35
66-12FGK	34
66-12FN1	34
66-12FN2	34
66-12FN3	34
66-12FN6	34
66-12FT	35
66-12FTF	33
66-12LAFW	30
66-12LAHM	30
66-12LAHW	30
66-12LASD	30
66-12LBC	31
66-12LBH	31
66-12LC	30
66-12LCF	27
66-12LCP	31
66-12LDH	31
66-12LE15A	29
66-12LE45A	29
66-12LE45B	29
66-12LE45C	29
66-12LE9A	28
66-12LE9AC	28
66-12LE9B	28
66-12LE9C	28
66-12LE9TC	28
66-12LE9TCC	28
66-12LJB	30
66-12LN1	28
66-12LN2	28
66-12LN3	28
66-12LSP	31
66-12LTA	29
66-12LTC	29
66-12LTF	27
66-12LTSC	27
66-12LTSCC	27
66-4XSBH	39
66-4XSDH	39
66-4XSFBC	38
66-4XSFC	39
66-4XSFCF	38
66-4XSFCP	38
66-4XSFE45	39
66-4XSFE9	39
66-4XSFFF	39
66-4XSFGK	38
66-4XSFN1	38
66-4XSFN2	38
66-4XSFN3	38
66-4XSFN6	38
66-4XSFT	39
66-4XSFTF	37
6604-12LW	27
6606-12LW	27
6612 G	9
6612 G NK	9
6612 GGV	9
6612 GGV NK	9
6612 GRT	43
6612 GRT NK	43
6612 GRTGV NK	43
6612 GTGV NK	41
6612 HS	16
6612 HS NK	16
6612-3RHS NK	22
6612-3RAHS NK	22
6612-12FW	33
6612-12LW	27
6612-12WT	45
6612-4XSFW	37
6612-4XSWT	47
66120 G	9
66120 G NK	9
66120 GGV	9
66120 GGV NK	9
66120 GRT NK	43
66120 GRTGV NK	43
66120 HS	16
66120 HS NK	16
66120-12FW	33
66120-12LW	27
66120-3RHS NK	22
66120-3RAHS NK	22
66120-4XSFW	37
6618 G	9
6618 G NK	9
6618 GGV NK	9
6618 GRT	43
6618 GRT NK	43
6618 GRTGV NK	43
6618-12WT	45
6618-4XSWT	47
6624 G	9
6624 G NK	9
6624 GGV	9
6624 GGV NK	9
6624 GRT	43
6624 GRT NK	43

Catalog Number	Page Number
6624 GRTGV NK	43
6624 GTGV NK	41
6624 HS	16
6624 HS NK	16
6624-12FW	33
6624-12LW	27
6624-12WT	45
6624-4XSFW	37
6624-4XSWT	47
663 SC	51
663 SC NK	51
663 SCGV	51
663 SCGV NK	51
6636 G	9
6636 G NK	9
6636 GGV	9
6636 GGV NK	9
6636 GRT	43
6636 GRT NK	43
6636 GRTGV NK	43
6636 GTGV NK	41
6636 HS	16
6636 HS NK	16
6636-12FW	33
6636-12LW	27
6636-12WT	45
6636-4XSFW	37
6636-4XSWT	47
664 HC	54
664 HC NK	54
664 RHC	72
664 RTC	81
664 RTHC	58
664 RTHC NK	58
664 RTSC	57
664 RTSC NK	57
664 RTSCGV	57
664 RTSCGV NK	57
664 SC	51
664 SC NK	51
664 SCG	61
664 SCGV	51
664 SCGV NK	51
664-SDF	265
664-SDFQR	267
664-SDFQRCC	269
664 WPSC	63
664-1	65
664-12CHC	93
664-12CHQRC	99
664-12CHSC	97
664-12LC	91
664-12SC	95
664-4CHC	139
664-4LC	137
664-4QT	141
664-4XACHC	201
664-4XALC	197
664-4XFCHQRC	261
664-4XFCHQRCW	263
664-4XFCHSC	259
664-4XFLC	257
664-4XSCHC	199
664-4XSLC	195
664-4XSQT	203
664-4XSS6CHC	199
664-4XSS6LC	195
664-FTC	103
6644-12FRC	34
6644-12FRE	34
6644-12LR	30
6644-4XSFRC	38
6644-4XSFRE	38
6645 HSL COMBO	19
6645 HSL SIDE	19
6645 L COMBO	14
6645 L COMBOGV	14
6645 L SIDE	14
6648 G	9
6648 G NK	9
6648 GGV	9
6648 GGV NK	9
6648 GRT	43
6648 GRT NK	43
6648 GRTGV NK	43
6648 GTGV NK	41
6648 HS	16
6648 HS NK	16
6648-12FW	33
6648-12LW	27
6648-12WT	45
6648-4XSFW	37
6648-4XSWT	47
666 HC	54
666 HC NK	54
666 RTSC	57
666 RTSC NK	57
666 RTSCGV	57
666 RTSCGV NK	57
666 SC	52
666 SC NK	52
666 SCG	61
666 SCGV	52
666 SCGV NK	52
666 WPSC	63
6660 G	9
6660 G NK	9
6660 GGV	9
6660 GGV NK	9
6660 GRT	43
6660 GRT NK	43
6660 GRTGV NK	43
6660 GTGV NK	41
6660 HS	16
6660 HS NK	16
6660-3RHS NK	22
6660-3RAHS NK	22
6660-12FW	33
6660-12LW	27
6660-12WT	45

Catalog Number	Page Number
6660-4XSFW	37
6660-4XSWT	47
6672 G	9
6672 G NK	9
6672 GGV	9
6672 GGV NK	9
6672 GRT	43
6672 GRT NK	43
6672 GRTGV NK	43
6672 GTGV NK	41
6672 HS	16
6672 HS NK	16
6672-12WT	45
6672-4XSWT	47
6688 FR	12, 17
6688-3RSCR	24
6688-3RASCR	24
6696 GRT NK	43
7MSLK	158, 216, 420
7MTLK	158, 216, 420
7MT1SLK	420
7MT1TLK	420
7MT4SLKB	423
7MT4TLKB	423
7.5 BAP	452
722418-4FS3PT	174
722418-4FSQT	172
722418-4XSFQT	230
722418-4XSFS3PT	233
722424-4FS3PT	174
722424-4FSDA3PT	177
722424-4XSFS3PT	232
722424-4XSFDA3PT	235
722430-4FS3PT	174
722430-4XSFDA3PT	235
722436-4XSFDA3PT	235
722518-4FS	170
722518-4XSFS	228
722518-4XSS6FS	228
722524-4FS	170
722524-4XSFS	228
722524-4XSS6FS	228
723016-12	107
723018-4FS3PT	174
723018-4XSFS3PT	232
723020-12	107
723024-12	107
723024-4FS3PT	174
723024-4FSDA3PT	177
723024-4FSQT	172
723024-4XSFS3PT	232
723024-4XSFSDA3PT	235
723024-4XSFSQT	230
723118-4FS	170
723118-4XSFS	228
723118-4XSS6FS	228
723124-4FS	170
723124-4XSFS	228
723124-4XSS6FS	228
723612-12	107
723618-4FS3PT	174
723618-4XFFS	281
723618-4XSFS3PT	232
723624-4FS3PT	174
723624-4FSDA3PT	177
723624-4FSQT	172
723624-4XFFS	281
723624-4XSFS3PT	232
723624-4XSFSDA3PT	235
723624-4XSFSQT	230
723630-4FS3PT	174
723630-4XSFS3PT	232
723636-4FS3PT	174
723636-4XSFS3PT	232
723636-4XSFSDA3PT	235
723718-4FS	170
723718-4XSFS	228
723718-4XSS6FS	228
723724-4FS	170
723724-4XSFS	228
723724-4XSS6FS	228
724818-12FSD	115
724818-4XFFSD	283
724818-4XSFSD3PT	236
724824-12FSD	115
724824-12FSDDA	116
724824-4XSFSD3PT	236
724824-4XSFSDDA3PT	239
726010-12FD	112
726012-12FD	112
726012-4FDQT	166
726012-4XSFDQT	224
726016-12FD	112
726018-12FSD	115
726018-4XSFDQT	224
726018-4XSFSD3PT	236
726020-12FD	112
726024-12FD	112
726024-12FSD	115
726024-12FSDDA	116
726024-4XSFSD3PT	236
726024-4XSFSDDA3PT	239
726036-12FSD	115
726036-12FSDDA	116
726036-4XSFSD3PT	236
726036-4XSFSDDA3PT	239
727210-12FD	112
727212-12FD	112
727212-4FDQT	166
727212-4XSFDQT	224
727216-12FD	112
727218-12FSD	115
727218-4XFFSD	283
727218-4XSFDQT	224
727218-4XSFSD3PT	236
727220-12FD	112
727224-12FD	112
727224-12FSD	115
727224-12FSDDA	116
727224-4FDQT	166

Catalog Number	Page Number
727224-4XSFDQT	224
727224-4XSFSD3PT	236
727224-4XSFSDDA3PT	239
746012-4FD	164
746012-4FD3PT	168
746012-4XSFD	222
746012-4XSFD3PT	226
746012-4XSS6FD	222
746012-4XSS6FD3PT	226
747212-4FD	164
747212-4FD3PT	168
747212-4XSFD	222
747212-4XSFD3PT	226
747212-4XSS6FD	222
747212-4XSS6FD3PT	226
747224-4FD	164
747224-4FD3PT	168
747224-4XSFD	222
747224-4XSFD3PT	226
747224-4XSS6FD	222
747224-4XSS6FD3PT	226
763-4XFSC	273
8TB	441
8TS	440
82AMK	159, 217
832-4XFSC	271
84AMK	159, 217
84033	455
84034	455
84035	455
844-4XFSC	271
86 SCF	53
86TB	441
86TS	440
8611214-12FS	131
8611214-4FS	177b
8611214-4XSFS	239b
8615014-12FS	132
8615014-4FS	177c
8615014-4XSFS	239c
8618714-12FS	133
8618714-4FS	177d
8618714-4XSFS	239d
863 SC	51
863 SC NK	51
863 SCGV	51
863 SCGV NK	51
863.5-12CHC	93
863.5-12CHQRC	99
863.5-12LC	91
863.5-12SC	95
863.5-4CHC	139
863.5-4LC	137
863.5-4QT	141
863.5-4XSQT	203
864-FTC	103
864 HC	54
864 HC NK	54
864 RHC	72
864 RTHC	58
864 RTHC NK	58
864 RTSC	57
864 RTSC NK	57
864 SC	51
864 SC NK	51
864 SCG	61
864 SCGV	51
864 SCGV NK	51
864-SDF	265
864-SDFQR	267
864-SDFQRCC	269
864 WPSC	63
864-1	65
864-12CHSC	97
864-4QT	141
864-4XACHC	201
864-4XALC	197
864-4XFCHQRC	261
864-4XFCHQRCW	263
864-4XFCHSC	259
864-4XFLC	257
864-4XSCHC	199
864-4XSLC	195
864-4XSQT	203
864-4XSS6CHC	199
864-4XSS6LC	195
866 RTSC	57
866 RTSC NK	57
866 SC	52
866 SC NK	52
866 SCGV	52
866 SCGV NK	52
866-1	65
866-12CHC	93
866-12CHSC	97
866-12SC	95
866-4QT	141
866-4XSQT	203
88 C	11
88 E	11
88 E NK	11
88 EGV	11
88 EGV NK	11
88 FH	12, 18
88 FL IN	13
88 FL OUT	13
88 FL SIDE	13
88 FTF	11, 17
88 FTFGV	11
88 GF	11
88 GFGV	11
88 HSC	17
88 HSCA	17
88 HSCU	17
88 HSE	17
88 HSE NK	17
88 HSF	18
88 HSL IN	19
88 HSL OUT	19
88 HSL SIDE	19

Catalog Number	Page Number
88 HST	20
88 HSX	20
88 L COMBO	13
88 L COMBOGV	13
88 L SIDE	13
88 L SWEEP	13
88 L SWEEPGV	13
88 LTX	12
88 LTXGV	12
88 SCF	53
88 SCS	53
88 T	14
88 TCF	80
88 TCS	80
88 TGV	14
88 WB	413
88 X	14
88 XGV	14
88-3RAHSC	22
88-3RAHSE NK	23
88-3RAHSF	23
88-3RAHSL SIDE	23
88-3RAHST	23
88-3RBKA	24
88-3RASCX	24
88-3RHSC	22
88-3RHSE NK	23
88-3RHSF	23
88-3RHSL SIDE	23
88-3RHST	23
88-3RSCX	24
88-12BH	35
88-12BK	12, 18, 24, 31, 34
88-12DH	35
88-12FBC	34
88-12FC	35
88-12FCF	34
88-12FCP	34
88-12FE45	35
88-12FE9	35
88-12FFF	35
88-12FGK	34
88-12FN1	34
88-12FN2	34
88-12FN3	34
88-12FN6	34
88-12FT	35
88-12FTF	33
88-12LAFW	30
88-12LAHM	30
88-12LAHW	30
88-12LASD	30
88-12LBC	31
88-12LBH	31
88-12LC	30
88-12LCF	27
88-12LCP	31
88-12LDH	31
88-12LE15A	29
88-12LE45A	29
88-12LE45B	29
88-12LE45C	29
88-12LE9A	28
88-12LE9AC	28
88-12LE9B	28
88-12LE9C	28
88-12LE9TC	28
88-12LE9TCC	28
88-12LJB	30
88-12LN1	28
88-12LN2	28
88-12LN3	28
88-12LSP	31
88-12LTA	29
88-12LTC	29
88-12LTF	27
88-12LTSC	27
88-12LTSCC	27
8804-12LW	27
8806-12LW	27
881010 FR	12, 17
8812 G	9
8812 G NK	9
8812 GGV	9
8812 GGV NK	9
8812 GRT	43
8812 GRT NK	43
8812 GRTGV NK	43
8812 HS	16
8812 HS NK	16
8812-12FW	33
8812-12LW	27
8812-12WT	45
8812-3RHS NK	22
8812-3RAHS NK	22
88120 G	9
88120 G NK	9
88120 GGV	9
88120 GGV NK	9
88120 GRT NK	43
88120 GRTGV NK	43
88120 HS	16
88120 HS NK	16
88120-12FW	33
88120-12LW	27
88120-3RHS NK	22
88120-3RAHS NK	22
8818 G	9
8818 G NK	9
8818 GGV NK	9
8818 GRT	43
8818 GRT NK	43
8824 G	9
8824 G NK	9
8824 GGV	9
8824 GGV NK	9
8824 GRT	43
8824 GRT NK	43
8824 GRTGV NK	43
8824 GTGV NK	41

Catalog Number	Page Number
8824 HS	16
8824 HS NK	16
8824-12FW	33
8824-12LW	27
8824-12WT	45
8836 G	9
8836 G NK	9
8836 GGV	9
8836 GGV NK	9
8836 GRT	43
8836 GRT NK	43
8836 GRTGV NK	43
8836 GTGV NK	41
8836 HS	16
8836 HS NK	16
8836-12FW	33
8836-12LW	27
8836-12WT	45
884 HC	54
884 HC NK	54
884 RHC	72
884 RTC	81
884 RTHC	58
884 RTHC NK	58
884 RTSC	57
884 RTSC NK	57
884 RTSCGV	57
884 RTSCGV NK	57
884 SC	51
884 SC NK	51
884 SCG	61
884 SCGV	51
884 SCGV NK	51
884-SDF	265
884-SDFQR	267
884-SDFQRCC	269
884 TCF	80
884 TCS	80
884 WPSC	63
884-1	65
884-12CHC	93
884-12CHSC	97
884-12LC	91
884-12SC	95
884-4QT	141
884-4XALC	197
884-4XFCHQRC	261
884-4XFCHSC	259
884-4XFLC	257
884-4XSCHC	199
884-4XSLC	195
884-4XSS6CHC	199
884-4XSS6LC	195
8845 HSL COMBO	19
8845 HSL SIDE	19
8845 L COMBO	14
8845 L COMBOGV	14
8845 L SIDE	14
8848 G	9
8848 G NK	9
8848 GGV	9
8848 GGV NK	9
8848 GRT	43
8848 GRT NK	43
8848 GRTGV NK	43
8848 GTGV NK	41
8848 HS	16
8848 HS NK	16
8848-12FW	33
8848-12LW	27
8848-12WT	45
886 HC	54
886 HC NK	54
886 RHC	72
886 RTSC	57
886 RTSC NK	57
886 RTSCGV	57
886 RTSCGV NK	57
886 SC	52
886 SC NK	52
886 SCG	61
886 SCGV	52
886 SCGV NK	52
886 WPSC	63
886-1	65
886-12CHC	93
886-12CHSC	97
886-4QT	141
8860 G	9
8860 G NK	9
8860 GGV	9
8860 GGV NK	9
8860 GRT	43
8860 GRT NK	43
8860 GRTGV NK	43
8860 GTGV NK	41
8860 HS	16
8860 HS NK	16
8860-12FW	33
8860-12LW	27
8860-12WT	45
8860-3RHS NK	22
8860-3RAHS NK	22
8866-12FRC	34
8866-12FRE	34
8866-12LR	30
8872 G	9
8872 G NK	9
8872 GGV	9
8872 GGV NK	9
8872 GRT	43
8872 GRT NK	43
8872 GRTGV NK	43
8872 GTGV NK	41
8872 HS	16
8872 HS NK	16
8872-12WT	45
888 SC	52
888 SC NK	52
888 SCGV	52

Catalog Number	Page Number
888 SCGV NK	52
8896 GRT NK	43
8896 GRTGV NK	43
902420-4FS3PT	174
902420-4XSFS3PT	232
903620-4FS3PT	174
903620-4XSFS3PT	232
903624-4FS3PT	174
903624-4FSDA3PT	177
903624-4XSFS3PT	232
903624-4XSFSDA3PT	235
903636-4FS3PT	174
903636-4FSDA3PT	177
903636-4XFFS	281
903636-4XSFS3PT	232
903636-4XSFSDA3PT	235
904820-12FSD	115
904820-4XSFSD3PT	236
907220-12FSD	115
907220-4XSFSD3PT	236
907224-12FSD	115
907224-12FSDDA	116
907224-4XSFSD3PT	236
907224-4XSFSDDA3PT	239
907236-12FSD	115
907236-4XSFSD3PT	236
932-4XFSC	271
963-4XFSC	273
AC-1224B	358
AC-1224T	358
AC-1224W	358
AC-1236B	358
AC-1236T	358
AC-1236W	358
AC-1248B	358
AC-1248T	358
AC-1248W	358
AC-12C12	354
AC-12C12SS	354
AC-12C16	354
AC-12C16SS	354
AC-12C20	354
AC-12C20SS	354
AC-12C24	354
AC-12C24SS	354
AC-1424B	362, 366, 367
AC-1424HP	366
AC-1424P	366
AC-1424SWP	367
AC-1424T	362
AC-1424W	362
AC-1436B	362, 366, 367
AC-1436HP	366
AC-1436P	366
AC-1436SWP	367
AC-1436T	362
AC-1436W	362
AC-1448B	362, 366
AC-1448HP	366
AC-1448P	366
AC-1448T	362
AC-1448W	362
AC-1460B	362, 366
AC-1460HP	366
AC-1460P	366
AC-1460T	362
AC-1460W	362
AC-1472B	362, 366
AC-1472P	366
AC-1472T	362
AC-1472W	362
AC-16C16	354
AC-16C16SS	354
AC-16C20	354
AC-16C20SS	354
AC-16C24	354
AC-16C24SS	354
AC-16C30	354
AC-16C30SS	354
AC-16C36	354
AC-16C36SS	354
AC-1818BASE	450
AC-20C20	354
AC-20C20SS	354
AC-20C24	354
AC-20C24SS	354
AC-20C30	354
AC-20C30SS	354
AC-2424BASE	450
AC-44ACOL	450
AC-44COL	450
AC-66ACOL	450
AC-66COL	450
AC-8C12	354
AC-8C12SS	354
AC-8C16	354
AC-8C16SS	354
AC-8C20	354
AC-8C20SS	354
AC-8C8	354
AC-8C8SS	354
AC-924B	356
AC-936B	356
AF6018SP	120, 183, 245
AF6024HP	117, 180, 242
AF6024HSWP	121,122,184,185,246,247
AF6024P	117, 180, 242
AF6024SWP	121,122,184,185,246,247
AF6036HP	117, 180, 242
AF6036HSWP	121, 184, 246
AF6036P	117, 180, 242
AF6036SWP	121, 184, 246
AF6048HP	119, 182, 244
AF6048P	118, 181, 243
AF6060P	118, 181, 243
AF60CPS	120, 183, 245
AF7218SP	120, 183, 245
AF7224HP	117, 180, 242
AF7224HSWP	121,122,184,185,246,247
AF7224P	117, 180, 242

Catalog Number	Page Number
AF7224SP	120, 183, 245
AF7224SWP	121,122,184,185,246,247
AF7230HP	117, 180, 242
AF7230HSWP	121,122,184,185,246,247
AF7230P	117, 180, 242
AF7230SWP	121,122,184,185,246,247
AF7236HP	117, 180, 242
AF7236HSWP	121,122,184,185,246,247
AF7236P	117, 180, 242
AF7236SWP	121,122,184,185,246,247
AF7248HP	119, 182, 244
AF7248P	118, 181, 243
AF7260HP	119, 182, 244
AF7260P	118, 181, 243
AF7272HP	119, 182, 244
AF7272P	118, 181, 243
AF72CPS	120, 183, 245
AF9018SP	120, 245
AF9024HP	117, 242
AF9024HSWP	121, 122, 246, 247
AF9024P	117, 242
AF9024SP	120, 245
AF9024SWP	121, 122, 246, 247
AF9036HP	117, 242
AF9036HSWP	121, 122, 246, 247
AF9036P	117, 242
AF9036SWP	121, 122, 246, 247
AF9048HP	119, 244
AF9048P	118, 243
AF9072HP	119, 244
AF9072P	118, 243
AF90CPS	120, 245
AFCBRKT3	123, 186, 248
AFCMH3	123, 186, 248, 368
AFPSUP2	123, 186, 248
AFSBRKT1	123, 186, 248, 368
AP-ABFD	452
AP-ABFD SS	452
AP-ABV	452
AP-ABV SS	452
AP-CH	452
AP-CH SS	452
AP-GE	452
AP-GE SS	452
AP-ITE	452
AP-ITE SS	452
AP-SD	452
AP-SD SS	452
AP-WAMT	452
AP-WAMT SS	452
~~AP-WSM~~ *Disc.*	452
AW1010P (AP, GP, SP)	406
AW1010PP	409
AW108P (AP, GP, SP)	290, 406
AW108PP	409
AW1210P (AP, GP, SP)	290, 406
AW1210PP	409
AW1212P (AP, GP, SP)	290, 406
AW1212PP	409
AW126P	406
AW126PP	409
AW1412P (AP, GP, SP)	290, 406
AW1412PP	409
AW147P (AP, GP, SP)	290
AW148P	406
AW148PP	409
AW1610P	406
AW1610PP	409
AW1612P (AP, GP, SP)	408
AW1612-1P	408
AW1612-1PP	410
AW1614P (AP, GP, SP)	290, 406
AW1614PP	409
AW1616P (AP, GP, SP)	408
AW1616-1P	408
AW1616-1PP	410
AW1620-1P	406
AW1620-1PP	408
AW1816P (AP, GP, SP)	290
AW2012P	408
AW2016P (AP, GP, SP)	290, 408
AW2016PJ (AP, SP)	290
AW2016-1P	408
AW2016-1PP	410
AW2020P (AP, GP, SP)	408
AW2020-1P	408
AW2020-1PP	410
AW2024-1P	408
AW2024-1PP	410
AW2412P (AP, GP, SP)	290, 408
AW2416P (AP, GP, SP)	408
AW2416-1P	408
AW2416-1PP	410
AW2420P (AP, GP, SP)	411
AW2420-1P	408
AW2420-1PP	410
AW2424P (AP, GP, SP)	411
AW2424-1P	408
AW2424-1PP	410
AW3016P (AP, GP, SP)	411
AW3020P (AP, GP, SP)	411
AW3020-1P	408
AW3020-1PP	410
AW3024P (AP, GP, SP)	411
AW3024-1P	408
AW3024-1PP	410
AW3030P (AP, GP, SP)	411
AW3030-1P	408
AW3030-1PP	410
AW3624P (AP, GP, SP)	411
AW3624-1P	408
AW3624-1PP	410
AW3630P (AP, GP, SP)	411
AW3630-1P	408
AW3630-1PP	410
AW3636P (SP)	411
AW4224-1P	408
AW4224-1PP	410
AW4224P	411
AW4230P (AP, GP, SP)	411

Catalog Number	Page Number
AW4236P (AP, GP, SP)	411
AW4242P	411
AW4824P	411
AW4830P (GP, SP)	411
AW4836P (AP, GP, SP)	411
AW4842P (AP, GP, SP)	411
AW4848P	411
AW5442P	412
AW6030P	411
AW6036P (AP, GP, SP)	411
AW6042P	411
AW6048P (AP, SP)	412
AW6060P (AP, SP)	412
AW64P (AP, GP, SP)	290, 406
AW64PP	409
AW66P (AP, GP, SP)	290, 406
AW66PP	409
AW7230P	411
AW7236P	411
AW7260P (AP, SP)	412
AW7272P (AP, SP)	412
AW76P (AP, GP, SP)	290
AW86P (AP, GP, SP)	290, 406
AW86PP	409
AW88P (AP, GP, SP)	290, 406
AW88PP	409
AW96P (AP, GP, SP)	290
AWF2420P (AP, SP)	290
AWF2424P (AP, SP)	290
AWF3020P (AP, SP)	290
AWF3024P (AP, SP)	290
AWF3622P (AP, SP)	290
AWF3630P (AP, SP)	290
AWF4836P (AP, SP)	291
AWF6036P (AP, SP)	291
AWF7221P (AP, SP)	291
AWF7224P (AP, SP)	291
AWF7233P (AP, SP)	291
AWF7236P (AP, SP)	291
AWF9036P (AP, SP)	291

Catalog Number	Page Number
BAEK115 *Disc.*	447
BAEK115NDH	447
BAEKDF	447
BD-PDHB	427
BD-PKHB	428
BD-PKHSS	428
BK412	438
BK415	438
BK418	438
BK424	438
BK430	438
BK436	438
BK448	438
BK612	438
BK615	438
BK618	438
BK624	438
BK630	438
BK636	438
BK648	438
BL02540.0-01-0003	446
BL02540.0-01	446
BL02541.0-01-0003	446
BL02541.0-01	446
BL01350.0-00	448
BL01351.0-00	448
BL01352.0-00	448
BLAVAFAGS10	395
BLAVAFAGS15	395
BLAVAFAGS20	395
BLAVAFAGS25	395
BLAVAFAGS30	395
BLGHV1000203	395, 396
BLGHV1500203	395, 396
BLGHV2000203	395, 397
BLGHV2500203	395, 397
BLGHV2501203	395, 398
BLGHV3000203	395, 398
BLGHV3001203	395, 398
BLGHV3002203	395, 398

Catalog Number	Page Number
BLGSF10	395
BLGSF15	395
BLGSF20	395
BLGSF25	395
BLGSF30	395
BLKNP100F	389
BLKNPA100F	390
BLKNP40FL	391
BLKNP40FLV	391
BLKNP60FL	392
BLKNP60FLV	392
BLKNPA60FL	393
BLKNPA60FLV	393
BLVC	292
BP23	436
BP33	436
BP34	436
BP43	436
BP44	436
BP64	436
BP66	436
BP812	436
BP84	436
BP86	436
BP88	436
BV4X	292
CARRY HANDLE	293
CD604812-4FD	308
CD604812-4XSFD	310b
CD606012-4FD	308
CD606012-4XSFD	310b
CD726012-4FD	308
CD726012-4XSFD	310b
CD727212-4FD	308
CD727212-4XSFD	310b
CD727218-4FD	308
CD727218-4XSFD	310b
CE6001	368, 443
CT6005	368, 443
CTB3005	368, 443

Catalog Number	Page Number
CTC2	368, 443
CTE3001	368, 443
DSC20228	300
DSC20228SS4	300
DSC20228SS6	300
DSC24228	300
DSC24228SS4	300
DSC24228SS6	300
DSC24268	300
DSC24268SS4	300
DSC24268SS6	300
DSC30268	300
DSC30268SS4	300
DSC30268SS6	300
DSC36268	300
DSC36268SS4	300
DSC36268SS6	300
DSC363212	300
DSC363212SS4	300
DSC363212SS6	300
DSC36328	300
DSC36328SS4	300
DSC36328SS6	300
DSC423212	300
DSC423212SS4	300
DSC423212SS6	300
DSC423812	300
DSC423812SS4	300
DSC423812SS6	300
DSC423816	300
DSC423816SS4	300
DSC423816SS6	300
DSC483812	300
DSC483812SS4	300
DSC483812SS6	300
DSC483816	300
DSC483816SS4	300
DSC483816SS6	300
DSC603812	300
DSC603812SS4	300
DSC603812SS6	300
DSC603816	300
DSC603816SS4	300
DSC603816SS6	300
DK12A	437
DK12SS	437
DK16A	437
DK16SS	437
DK20A	437
DK20SS	437
DK24A	437
DK24SS	437
DK30A	437
DK30SS	437
DK36A	437
DK36SS	437
DSTOPK	418
DV	292
DV4X	292
E2-MA-1032-PHMS-100	159, 190, 217, 252
E2-MA-1224-PHMS-100	159, 190, 217, 252
E2-MA-CN-1032-100	159, 190, 217, 252
E2-MA-CN-1224-100	159, 190, 217, 252
E2-MA-CN-M6-100	159, 190, 217, 252
E2-MA-M6-PHMS-100	159, 190, 217, 252
ECMD1	439
EFH100-120	402
EFH150-120	402
EFH200-120	402
EFH300-120	402
EFH400-120	402
EFHT550F-120	400
EFHT650F-120	400
EH100	401
EH15	401
EH150	401
EH30	401
EH45	401
EH60	401
EH75	401
EHTC120-F	403
~~ELMS25-120~~ *Disc.*	445
~~ELS25-120~~ *Disc.*	445
ENCAP2K	294
ENCAP4K	294
ER1	449
ER2	449
ER3	449
ER4	449
ER5	449
ES2	433
ES-48RMA-L	189, 251
ES-48RMA-U	189, 251
ES-48SORMF	190, 252
ES-60RMA-L	189, 251
ES-60RMA-U	189, 251
ES-60SORMF	190, 252
ES-604812-4	179
ES-604812-4XS	241
ES-604812-4XSS6	241
ES-604816-4	179
ES-604816-4XS	241
ES-604816-4XSS6	241
ES-604820-4	179
ES-604820-4XS	241
ES-604820-4XSS6	241
ES-604824-4	179
ES-604824-4XS	241
ES-604824-4XSS6	241
ES-606012-4	179
ES-606012-4XS	241
ES-606012-4XSS6	241
ES-606016-4	179
ES-606016-4XS	241
ES-606016-4XSS6	241
ES-606020-4	179
ES-606020-4XS	241
ES-606020-4XSS6	241
ES-606024-4	179
ES-606024-4XS	241

Catalog Number	Page Number
ES-606024-4XSS6	241
ES-72RMA-L	189, 251
ES-72RMA-U	189, 251
ES-72SORMF	190, 252
ES-726012-4	179
ES-726012-4XS	241
ES-726012-4XSS6	241
ES-726016-4	179
ES-726016-4XS	241
ES-726016-4XSS6	241
ES-726020-4	179
ES-726020-4XS	241
ES-726020-4XSS6	241
ES-726024-4	179
ES-726024-4XS	241
ES-726024-4XSS6	241
ES-727212-4	179
ES-727212-4XS	241
ES-727212-4XSS6	241
ES-727216-4	179
ES-727216-4XS	241
ES-727216-4XSS6	241
ES-727220-4	179
ES-727220-4XS	241
ES-727220-4XSS6	241
ES-727224-4	179
ES-727224-4XS	241
ES-727224-4XSS6	241
ES-90RMA-L	189, 251
ES-90RMA-U	189, 251
ES-90SORMF	190, 252
ES-SMFK6	253
ESTNC-F	403
ESTNO-F	403
~~FAS-412~~ *Disc.*	435
FC412SS	431
FD202110-12	297
FD20218-12	297
FD242110-12	297
FD24218-12	297
FD242510-12	297
FD24258-12	297
FD302110-12	297
FD30218-12	297
FD302510-12	297
FD302512-12	297
FD30258-12	297
FD362510-12	297
FD36258-12	297
FD363110-12	297
FD363112-12	297
FD363116-12	297
FD36318-12	297
FD423110-12	297
FD423112-12	297
FD42318-12	297
FD423710-12	297
FD423712-12	297
FD42378-12	297
FD483710-12	297
FD483712-12	297
FD483716-12	297
FD48378-12	297
FD603710-12	297
FD603712-12	297
FD603712A-12	297
FD603716-12	297
FD60378-12	297
FD604912-4FD	308
FD604912-4XSFD	310b
FD604918-4FD	308
FD604918-4XSFD	310b
FD606112-4FD	308
FD606112-4XSFD	310b
FD606118-4FD	308
FD606118-4XSFD	310b
FD722718-4FS	321
FD722718-4XSFS	325b
FD723318-4FS	321
FD723318-4XSFS	325b
FD723918-4FS	321
FD723918-4XSFS	325b
FD725318-4FS	322
FD725318-4XSFS	325c
FD726112-4FD	308
FD726118-4XSFD	310b
FD726112-4FD	308
FD726118-4XSFD	310b
FD726518-4FS	322
FD726518-4XSFS	325c
FD727312-4FD	308
FD727312-4XSFD	310b
FD727318-4FD	308
FD727318-4XSFD	310b
FD727324-4FD	308
FD727324-4XSFD	310b
FD727718-4FS	322
FD727718-4XSFS	325c
FD727724-4FS	322
FD727724-4XSFS	325c
FD729918-4FS	323
FD729918-4XSFS	325d
FD8411718-4FS	323
FD8411718-4XSFS	325d
FD8415718-4FS	324
FD8415718-4XSFS	325e
FD8419618-4FS	325
FD8419618-4XSFS	325f
FD843918-4FS	321
FD843918-4XSFS	325b
FD847718-4FS	322
FD847718-4XSFS	325c
FD9011724-4FS	323
FD9011724-4XSFS	325d
FD903920-4FS	321
FD903920-4XSFS	325b
FD903924-4FS	321
FD903924-4XSFS	325b
FD907720-4FS	322
FD907720-4XSFS	325c

Catalog Number	Page Number
FD907724-4FS	322
FD907724-4XSFS	325c
FE6001	368, 444
FLT33	435
FLT34	435
FLT43	435
FLT44	435
FLT64	435
FLT66	435
FLT812	435
FLT84	435
FLT86	435
FLT88	435
FLWK133	417
FLWK52	417
FLWK96	417
FSHELF12	432
FSHELF18	432
FT6005	368, 443
FTB3005	368, 443
FTE3001	368, 443
GLK2	454
GP610	432
GP618	432
GS416	454
GS48	454
GS816	454
GS88	454
HWK1212	418
HWK1612	418
HWK2016	418
HWK2020	418
HWK2420	418
HWK3024	418
J12CK2	430
J4XCK2	430
JICSPK	414
KNA4C1DP15L	375
KNA4C1DP15LV	375
KNA4C11SP43L	385
KNA4C11SP43LV	385
KNA4C3DP21L	376
KNA4C3DP21LV	376
KA4C4HTL	386
KA4C4.0H5R	387
KNA4C4SP28L	383
KNA4C4SP28LV	383
KNA4C5DP33L	377
KNA4C5DP33LV	377
KNA4C6SP36L	384
KNA4C6SP36LV	384
KNA4C8SP36L	384
KNA4C8SP36LV	384
KNA4C9DP47L	378
KNA4C9DP47LV	378
KP40	388
KP60	388
KP100	388
K2NA6C14DP50L	379
K2NA6C14DP50LV	379
L23	430
L23SS	430
LPKF	293
LPK23	434
LPK33	434
LPK34	434
LPK43	434
LPK44	434
LPK64	434
LPK66	434
LPK812	434
LPK84	434
LPK86	434
LPK88	434
M7218-12FBK	129, 330
M7218-12FEK	129, 330
M7218-12FGK	129, 330
M723818-12FS	127
M727718-12FS	128
M8418-12FBK	129, 330
M8418-12FEK	129, 330
M8418-12FGK	129, 330
M8424-12FBK	129, 330
M8424-12FEK	129, 330
M8424-12FGK	129, 330
M843818-12FS	127
M843824-12FS	127
M847718-12FS	128
M847724-12FS	128
MFD723918-12FS	328
MFD727818-12FS	329
MFD843918-12FS	328
MFD843924-12FS	328
MFD847818-12FS	329
MFD847824-12FS	329
MFK10	433
MFK10XS	433
MFK12	191, 433
MFK12XS	253, 433
MFK16	191, 433
MFK16XS	253, 433
MFK18	191, 253, 433
MFK18XS	433
MFK20	191, 433
MFK20XS	253, 433
MFK24	191, 433
MFK24XS	253, 433
MFK8	434
MFK8XS	434
MTGFTKITSD	294
N1010P	406
N1010PP	409
N108P	406
N108PP	409
N1210P	406
N1210PP	409
N1212P	406
N1212PP	409
N12CK2	431
N1412P	406

Catalog Number	Page Number
N1412PP	409
N1612P	407
N1616P	407
N1818P	407
N2012P	406
N2012PP	409
N2016P	407
N2020P	407
N2420P	407
N2424P	407
N3024P	407
N3030P	407
N3624P	407
N3630P	407
N3636P	407
N4230P	407
N4236P	407
N4830P	407
N4836P	407
N4XCK2	431
N6036P	407
N624-20	455
N627-20	455
N66P	406
N66PP	409
N86P	406
N86PP	409
N88P	406
N88PP	409
NSPK	415
PB1 (SS, SS6)	343
PB12 (SS, SS6)	343
PB12B	347
PB16	343
PB16B	347
PB1B	347
PB1M (SS)	343
PB2 (SS, SS6)	343
PB2B	347
PB2M (SS)	343
PB20	343
PB20B	347
PB25	343
PB25B	347
PB3	343
PB30B	347
PB4	343
PB4B	347
PB4F	289
PB6 (SS, SS6)	343
PB6B	347
PB6F	289
PB9 (SS, SS6)	343
PB9B	347
PB9F	289
PBC12	351
PBC16	351
PBC2	351
PBC20	351
PBC25	351
PBC3	351
PBC4	351
PBC6	351
PBC8	351
PBC9	351
PBCS12	351
PBCS3	351
PBCS4	351
PBP12	349
PBP16	349
PBP20	349
PBP25	349
PBP30	349
PBP36	349
PBP4	349
PBP42	349
PBP6	349
PBP9	349
PBS3B	347
PBS4B	347
PBX10	345
PBX12	345
PBX16	345
PBX20	345
PBX25	345
PBX30	345
PBX36	345
PBX4	345
PBX6	345
PBX9	345
PCK4	154, 212
PLH	416
PLKJICSS6	429
PS3	416
PS9	416
PV1F	285
PV1MF	287
PV10	343
PV2F	285
PV2MF	287
PV3 (SS, SS6)	343
PV3F	285
PV3MF	287
PV3M (SS)	343
PV4 (SS, SS6)	343
PV4F	285
PV4MF	287
PV4M (SS)	343
PV5	343
PV5F	285
PV5MF	287
PV6	343
PV6F	285
PV6MF	287
PV8	343
PVX1 (SS)	345
PVX2 (SS)	345
PVX3 (SS)	345
PVX4 (SS)	345
PWK133 (SS)	417

Catalog Number	Page Number
PWK138 (SS)	417
PWK1711 (SS)	417
PWK175 (SS)	417
PWK2315 (SS)	417
PWK2919 (SS)	417
PWK3523 (SS)	417
PWK53 (SS)	417
PWK95 (SS)	417
S050 (SS)	436
S050FG	293
S075 (SS)	436
S075FG	293
S100 (SS)	436
S100FG	293
S125 (SS)	436
S125FG	293
S150 (SS)	436
S150FG	293
S200 (SS)	436
S200FG	293
S250 (SS)	436
S250FG	293
S300 (SS)	436
S300FG	293
S350 (SS)	436
S350FG	293
S400 (SS)	436
S400FG	293
SEALC	455
SEALS	455
SEALWN	455
SPB (SS)	436
SPBFG	293
SPBG (SS)	436
SPBGFG	293
SS2PK	294
SS4PK	294
T1EFL	419
T1KLBM	422
T12KLB	422
T4DLBM	422
T4KLTHB	423
T4KLWNB	422
T4KLWNBM	422
T4LDLB	422
T4PKHB	427
T4PLWNB	422
T4THB	423
T4WNB	422
T4WNBM	422
T4XDLSSM	423
T4XLDLSS	423
T4XPHSS	428
TN228-20	455
TSK	445
WMHK-01	158, 216, 425
WMHK-02	158, 216, 425
WMHK-03	158, 216, 425
WMHK-04	158, 216, 425
WMHNL	158, 216, 425
WMHPTO	158, 216, 425
WMK	154
WMKSS6	212

NOTICE

Eaton reserves the right to change the specifications, materials, equipment, prices or the availability of products at any time without prior notice. While every effort has been made to assure the accuracy of information contained in this catalog at the time of publication, we are not responsible for inaccuracies resulting from undetected errors or omissions.

U.S. Customer Service Center is staffed Monday through Friday from 7 a.m. to 5:00 p.m. Central Standard Time.

For more information, visit Eaton.com/enclosures.

Eaton
509 West Monroe Street
Highland, IL 62249
United States
Phone: (800) 851-7415
Eaton.com

Eaton
5925 McLaughlin Road
Mississauga, ON L5R 1B8
Canada
Phone: (800) 569-3660
Eaton.com/contactca

Eaton
1000 Eaton Boulevard
Cleveland, OH 44122
United States
Eaton.com

B-Line Division
509 West Monroe Street
Highland, IL 62249
Phone: 800-851-7415
Fax: 618-654-1917
Eaton.com

© 2026 Eaton
All Rights Reserved
Printed in USA Publication
No. CA304001EN
Aug 2026

Eaton is a registered trademark

All other trademarks are property of their respective owners.